Via Acquanera, 29 22100 COMO
tel. 031.526.566 (r.a.) fax 031.507.984
info@calpower.it www.calpower.it

Lx \ Ls Series
AC Power Source
Programming Manual

Contact Information
Telephone: 800 733 5427 (toll free in North America)
858 450 0085 (direct)
Fax: 858 458 0267
Email:
Domestic Sales: domorders.sd@ametek.com
International Sales: intlorders.sd@ametek.com
Customer Service: service.ppd@ametek.com
Web: www.programmablepower.com

March 2011 Document No. 7004-961 Rev. J

Refers to Lx and Ls Series AC Power Source/Analyzers

Models:

Single chassis:	3000Lx, 4500Lx, 6000Lx
Multiple chassis:	9000Lx/2, 12000Lx/2, 13500Lx/3, 18000Lx/3

Single chassis:	3000Ls, 4500Ls, 6000Ls
Multiple chassis:	9000Ls/2, 12000Ls/2, 13500Ls/3, 18000Ls/3

Manual revision: J, March 2011

About AMETEK

AMETEK Programmable Power, Inc., a Division of AMETEK, Inc., is a global leader in the design and manufacture of precision, programmable power supplies for R&D, test and measurement, process control, power bus simulation and power conditioning applications across diverse industrial segments. From bench top supplies to rack-mounted industrial power subsystems, AMETEK Programmable Power is the proud manufacturer of Elgar, Sorensen, California Instruments and Power Ten brand power supplies.

AMETEK, Inc. is a leading global manufacturer of electronic instruments and electromechanical devices with annualized sales of $2.5 billion. The Company has over 11,000 colleagues working at more than 80 manufacturing facilities and more than 80 sales and service centers in the United States and around the world.

Trademarks

AMETEK is a registered trademark of AMETEK, Inc.
Other trademarks, registered trademarks, and product names are the property of their respective owners and are used herein for identification purposes only.

Notice of Copyright

Lx|Ls Series, AC Power Source, Programming Manual © 2010 AMETEK Programmable Power, Inc. All rights reserved.

Exclusion for Documentation

UNLESS SPECIFICALLY AGREED TO IN WRITING, AMETEK PROGRAMMABLE POWER, INC. ("AMETEK"):

(a) MAKES NO WARRANTY AS TO THE ACCURACY, SUFFICIENCY OR SUITABILITY OF ANY TECHNICAL OR OTHER INFORMATION PROVIDED IN ITS MANUALS OR OTHER DOCUMENTATION.

(b) ASSUMES NO RESPONSIBILITY OR LIABILITY FOR LOSSES, DAMAGES, COSTS OR EXPENSES, WHETHER SPECIAL, DIRECT, INDIRECT, CONSEQUENTIAL OR INCIDENTAL, WHICH MIGHT ARISE OUT OF THE USE OF SUCH INFORMATION. THE USE OF ANY SUCH INFORMATION WILL BE ENTIRELY AT THE USER'S RISK, AND

(c) REMINDS YOU THAT IF THIS MANUAL IS IN ANY LANGUAGE OTHER THAN ENGLISH, ALTHOUGH STEPS HAVE BEEN TAKEN TO MAINTAIN THE ACCURACY OF THE TRANSLATION, THE ACCURACY CANNOT BE GUARANTEED. APPROVED AMETEK CONTENT IS CONTAINED WITH THE ENGLISH LANGUAGE VERSION, WHICH IS POSTED AT WWW.PROGRAMMABLEPOWER.COM.

Date and Revision

March 2011 Revision J

Part Number

7004-961

Contact Information

Telephone: 800 733 5427 (toll free in North America)
858 450 0085 (direct)
Fax: 858 458 0267
Email: sales@programmablepower.com
service@programmablepower.com
Web: www.programmablepower.com

This page intentionally left blank.

Important Safety Instructions

Before applying power to the system, verify that your product is configured properly for your particular application.

WARNING	**Hazardous voltages may be present when covers are removed. Qualified personnel must use extreme caution when servicing this equipment. Circuit boards, test points, and output voltages also may be floating above (below) chassis ground.**
WARNING	**The equipment used contains ESD sensitive ports. When installing equipment, follow ESD Safety Procedures. Electrostatic discharges might cause damage to the equipment.**

Only *qualified personnel* who deal with attendant hazards in power supplies, are allowed to perform installation and servicing.

Ensure that the AC power line ground is connected properly to the Power Rack input connector or chassis. Similarly, other power ground lines including those to application and maintenance equipment *must* be grounded properly for both personnel and equipment safety.

Always ensure that facility AC input power is de-energized prior to connecting or disconnecting any cable.

In normal operation, the operator does not have access to hazardous voltages within the chassis. However, depending on the user's application configuration, **HIGH VOLTAGES HAZARDOUS TO HUMAN SAFETY** may be normally generated on the output terminals. The customer/user must ensure that the output power lines are labeled properly as to the safety hazards and that any inadvertent contact with hazardous voltages is eliminated.

Guard against risks of electrical shock during open cover checks by not touching any portion of the electrical circuits. Even when power is off, capacitors may retain an electrical charge. Use safety glasses during open cover checks to avoid personal injury by any sudden component failure.

Neither AMETEK Programmable Power Inc., San Diego, California, USA, nor any of the subsidiary sales organizations can accept any responsibility for personnel, material or inconsequential injury, loss or damage that results from improper use of the equipment and accessories.

SAFETY SYMBOLS

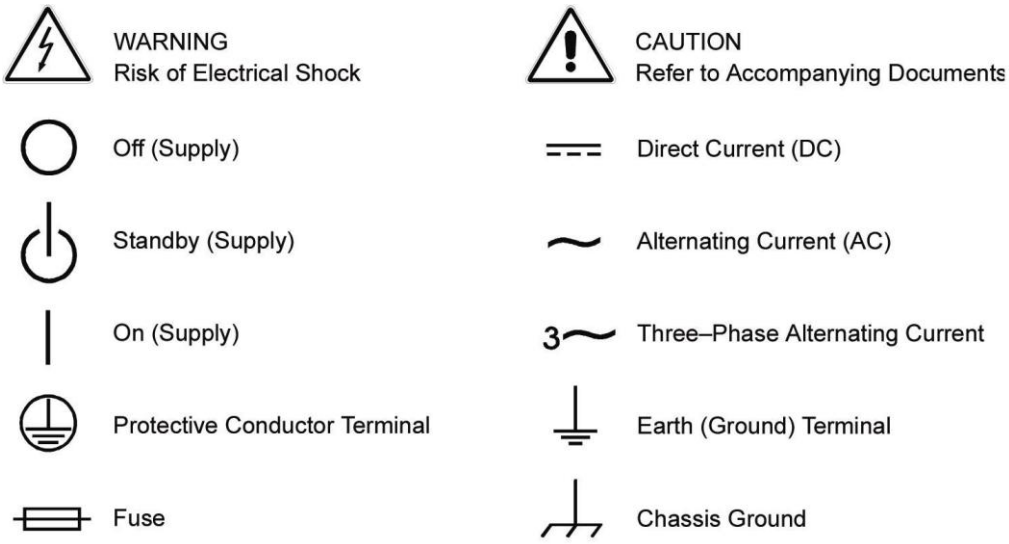

Product Family: Lx \ Ls Series

Warranty Period: One Year

WARRANTY TERMS

AMETEK Programmable Power, Inc. ("AMETEK"), provides this written warranty covering the Product stated above, and if the Buyer discovers and notifies AMETEK in writing of any defect in material or workmanship within the applicable warranty period stated above, then AMETEK may, at its option: repair or replace the Product; or issue a credit note for the defective Product; or provide the Buyer with replacement parts for the Product.

The Buyer will, at its expense, return the defective Product or parts thereof to AMETEK in accordance with the return procedure specified below. AMETEK will, at its expense, deliver the repaired or replaced Product or parts to the Buyer. Any warranty of AMETEK will not apply if the Buyer is in default under the Purchase Order Agreement or where the Product or any part thereof:

- is damaged by misuse, accident, negligence or failure to maintain the same as specified or required by AMETEK;
- is damaged by modifications, alterations or attachments thereto which are not authorized by AMETEK;
- is installed or operated contrary to the instructions of AMETEK;
- is opened, modified or disassembled in any way without AMETEK's consent; or
- is used in combination with items, articles or materials not authorized by AMETEK.

The Buyer may not assert any claim that the Products are not in conformity with any warranty until the Buyer has made all payments to AMETEK provided for in the Purchase Order Agreement.

PRODUCT RETURN PROCEDURE

1. Request a Return Material Authorization (RMA) number from the repair facility (**must be done in the country in which it was purchased**):
   - **In the USA**, contact the AMETEK Repair Department prior to the return of the product to AMETEK for repair:

     Telephone: 800-733-5427, ext. 2295 or ext. 2463 (toll free North America)
     858-450-0085, ext. 2295 or ext. 2463 (direct)
   - **Outside the United States**, contact the nearest Authorized Service Center (ASC). A full listing can be found either through your local distributor or our website, www.programmablepower.com, by clicking Support and going to the Service Centers tab.
2. When requesting an RMA, have the following information ready:
   - Model number
   - Serial number
   - Description of the problem

NOTE: Unauthorized returns will not be accepted and will be returned at the shipper's expense.

NOTE: A returned product found upon inspection by AMETEK, to be in specification is subject to an evaluation fee and applicable freight charges.

Table of Contents

1. Introduction 8
1.1 Documentation Summary 8
1.2 Lx Series and Ls Series Differences 9
1.3 Manual organization and format 9
1.4 Introduction to Programming 10

2. Introduction to SCPI 11
2.1 Conventions Used in This Manual 11
2.2 The SCPI Commands and Messages 11
2.3 Using Queries 14
2.4 Coupled Commands 14
2.5 Structure of a SCPI Message 14
2.6 SCPI Data Formats 17

3. System Considerations 19
3.1 Assigning the IEEE-488 Address in Programs 19
3.2 Instrument Drivers and Application Software 19

4. SCPI Command Reference 20
4.1 Introduction 20
4.2 Subsystem Commands 21
4.3 Calibration Subsystem 22
4.4 Diagnostic Subsystem 24
4.5 Instrument Subsystem 25
4.6 Limit Subsystem 26
4.7 Array Measurement Subsystem 28
4.8 Current Measurement Subsystem 33
4.9 Frequency Measurement Subsystem 38
4.10 Power Measurement Subsystem 39
4.11 Voltage Measurement Subsystem 41
4.12 Output Subsystem 44
4.13 Power On Subsystem 48
4.14 Sense Subsystem - Sweep 49
4.15 Source Subsystem - Current 51
4.16 Source Subsystem - Frequency 53
4.17 Source Subsystem - Function 56
4.18 Source Subsystem - List 59
4.19 Source Subsystem - Phase 65
4.20 Source Subsystem - Pulse 67
4.21 Source Subsystem - Voltage 70
4.22 Status Subsystem Commands 76
4.23 System Commands 83
4.24 Trace Subsystem Commands 86
4.25 Trigger Subsystem 88

5. Common Commands 93
5.1 *CLS 94
5.2 *ESR? 94
5.3 *IDN? 95
5.4 *OPC 95
5.5 *OPT? 95
5.6 *PSC 95
5.7 *RCL 96
5.8 *RST 97
5.9 *SAV 98
5.10 *SRE 98
5.11 *STB? 98
5.12 *TRG 99
5.13 *TST? 99
5.14 *WAI 100

6. Programming Examples 101
6.1 Introduction 101
6.2 Programming the Output 101
6.3 Coupled Commands 105
6.4 Programming Output Transients 106
6.5 Step and Pulse Transients 107
6.6 List Transients 109
6.7 Triggering Output Changes 110
6.8 Making Measurements 114
6.9 Controlling the Instantaneous Voltage and Current Data Buffers 119
6.10 Downloading Arbitrary Waveforms 122
6.11 Command Processing Times 123

7. Programming the Status and Event Registers 124
7.1 Power-On Conditions 124
7.2 Operation Status Group 124
7.3 Questionable Status Group 127
7.4 Questionable Instrument Isummary Status Group 128
7.5 Standard Event Status Group 129
7.6 Status Byte Register 130
7.7 Examples 131
7.8 Remote Inhibit and Discrete Fault Indicator 134
7.9 SCPI Command Completion 135

8. Option Commands 136
8.1 Introduction 136
8.2 APE Command Language (Abbreviated Plain English) 137
8.3 RTCA/DO-160D (-160) 156
8.4 MIL-STD 704 Rev D - F (-704) 163
8.5 MIL-STD 704 Rev A - F (-704F) 169

Appendix A: SCPI Command tree 183

Appendix B: SCPI Conformance Information 187

Appendix C: Error Messages 190

Appendix D: iL Series / HP6834B Compatability 197

Index 198

Table of Figures

Figure 2-1: Partial Command Tree 12
Figure 2-2: Command Message Structure 15
Figure 6-1: Model of transient system. 107
Figure 6-2: Model of output trigger system 111
Figure 6-3: Model of Measurement triggers. 117
Figure 6-4: Pre- and Post Event Triggering 121
Figure 7-1: Status Register Model 125
Figure 7-2: SMA Connector Trigger Model. 133
Figure 8-1: APE Command Tree 142

Table of Tables

Table 2-1: Command parameters Suffixes and Multipliers 17
Table 4-1: PULSe:HOLD = WIDTh parameters 68
Table 4-2: PULSe:HOLD = DCYCle parameters 68
Table 4-3: Bit Configuration of Status Operation Registers 77
Table 4-4: Bit Configuration of Questionable Registers 78
Table 4-5: Bit Configuration of Questionable Instrument Summary Registers 80
Table 5-1: Bit Configuration of Standard Event Status Enable Register 94
Table 5-2 : factory-defined *RST states 97
Table 5-3: Bit Configuration of Status Byte Register 99
Table 6-1: Command Processing Times 123
Table 7-1: Operation Status registers 124
Table 7-2: Bit Configurations of Status Registers 126
Table 7-3: Questionable Status registers 127
Table 7-4: Questionable Instrument Isummary Status registers 128
Table 8-1: APE to SCPI mode change commands 137
Table 8-2: APE versus SCPI equivalent power initialization commands 139
Table 8-3: APE language syntax program headers 144
Table 8-4: APE Language TLK Arguments 146
Table 8-5: Example TALK responses for 3 phase systems 152
Table 8-6: APE Status Byte Error Codes 154
Table 8-7: MS704 Steady state frequency by group 172
Table 8-8: SCPI error codes and messages. 195

1. Introduction

This manual contains programming information for the Lx Series and Ls Series AC source/Analyzers. The expression "AC source" as used in the manual also applies to the same series. You will find the following information in the rest of this manual:

Chapter 2	Introduction to SCPI
Chapter 3	System Considerations
Chapter 4	SCPI Command Reference
Chapter 5	Common Commands
Chapter 6	Programming Examples
Chapter 7	Programming the Status and Event Registers
Chapter 8	Options
Appendix A	SCPI command tree
Appendix B	SCPI conformance information
Appendix C	Error messages

1.1 Documentation Summary

The following document is related to this Programming Manual and may have additional helpful information for using the AC source.

- User's Manual. P/N 7004-960 Includes specifications and supplemental characteristics, how to use the front panel, how to connect to the instrument, and calibration procedures.

1.1.1 External References

SCPI References

The following documents will assist you with programming in SCPI:

- Beginner's Manual to SCPI. Highly recommended for anyone who has not had previous experience programming with SCPI.
- Controller programming manuals: consult the documentation supplied with the IEEE-488 controller or IEEE-488 PC plug in card for information concerning general IEEE-488.2 conventions and concepts.

The following are two formal documents concerning the IEEE-488 interface:

- ANSI/IEEE Std. 488.1-1987 IEEE Standard Digital Interface for Programmable Instrumentation. Defines the technical details of the IEEE-488 interface. While much of the information is beyond the need of most programmers, it can serve to clarify terms used in this manual and in related documents.
- ANSI/IEEE Std. 488.2-1987 IEEE Standard Codes, Formats, Protocols, and Common Commands. Recommended as a reference only if you intend to do fairly sophisticated programming. Helpful for finding precise definitions of certain types of SCPI message formats, data types, or common commands.

The above two documents are available from the IEEE (Institute of Electrical and Electronics Engineers), 345 East 47th Street, New York, NY 10017, USA or via the web at www.ieee.org .

1.2 Lx Series and Ls Series Differences

The Lx Series and Ls Series of AC power sources are both based on the same AC power source hardware platform and share many common components. The differences are primarily in configuration and options. This manual covers both model series. Some commands listed may not apply to Ls Series AC sources without the –ADV option and / or –MODE option.

1.2.1 Firmware differences

The Lx Series is fully featured and supports all commands listed in the programming manual.

The Ls Series provides most basic functions in its standard configurations. More advanced features can be added by specifying the –ADV (advanced) option. If the –ADV option is installed, all commands listed in this programming manual are supported. If not, commands related to arbitrary waveforms and harmonic analysis measurements are not supported and will generate a "-113 Syntax Error" message.

1.2.2 Hardware differences

In addition to the firmware differences described, the following hardware differences exist between the standard Lx Ac source and the Ls AC source.

- Lx has a 150V / 300 V rms output range pair. Optional ranges of 135/270 (-HV option) and 200/400 (-EHV option) are available at time of order.
- Ls has a 135 V / 270 V rms output range pair. Optional ranges of 156/312 (-HV option) and 200/400 (-EHV option) are available at time of order.
- The Lx rear panel connector labeling is compliant with the California Instruments iL Series which it replaces and the HP/Agilent model 6834B.
- The Ls rear panel connector labeling is compliant with the California Instruments L Series.
- The Lx Series comes standard with both GPIB and RS232C interfaces.
- The Ls Series comes standard with an RS232C only, An optional GPIB interface (-GPIB option) is available.

Note: Both interfaces use the SCPI command syntax as described in the programming manual.

- The Lx Series provides both three phase and single phase output modes which can be selected from the front panel or over the bus.
- The Ls Series provides either three phase (-3 models) or single phase (-1 models). Three phase Ls Series sources may optionally be equipped with the –MODE option which provides the same phase mode switching as the Lx Series.

1.3 Manual organization and format

All user documentation for California Instruments power sources is provided on CDROM in electronic format. (Adobe Portable Document Format) The required Adobe PDF viewer is supplied on the same CDROM. This manual may be printed for personal use if a hardcopy is desired. To request a hardcopy from California Instruments, contact customer service at support@calinst.com. There will be an additional charge for printed manuals.

This manual contains sections on programming the Lx or Ls Series over the bus. The Lx Series is equipped with both GPIB and RS232C interfaces. The Ls Series is equipped with a RS232C interface. An optional GPIB interface can be specified at the time of order. Refer to the Lx / Ls

Series User manual for information on using the remote control interface and command syntax. The user manual (P/N 7004-960) is provided on the same CDROM as this user manual.

California Instruments may make updated versions of this manual available from time to time in electronic format through it's website. To obtain an updated manual revision if available, check the California Instruments Manual download page at www.calinst.com. You need to register as a customer to obtain free access to manual and software downloads.

1.4 Introduction to Programming

This section provides some general information regarding programming IEEE-488 bus instrumentation.

1.4.1 IEEE-488 Capabilities of the AC source

All AC source functions except for setting the IEEE-488 address are programmable over the IEEE-488. The IEEE 488.2 capabilities of the AC source are listed in Chapter 2 of the User's Manual. The Ls Series requires the –GPIB option.

1.4.2 IEEE-488 Address

The AC source operates from an IEEE-488 address that is set from the front panel. To set the IEEE-488 address, press the Menu key on the front panel repeatedly until the CONFIGURATION entry is shown on the LCD display.

Move the indicator on the right hand side of the display to point to CONFIGURATION and press the ENTER key.

This will display the IEEE ADRRESS currently set. To change the address, use the Voltage knob to increment or decrement the value. Press the ENTER key to confirm your selection.

1.4.3 RS232C Capabilities of the AC source

All AC source functions are programmable over the RS232C interface. The RS232C capabilities of the AC source are listed in Chapter 2 of the User's Manual. Some capabilities support on the GPIB interface such as ATN, GET and SRQ interrupts do not apply to the RS232C interface. Baudrates from 9600 to 115200 are supported.

The RS232C interface may be used to install updated firmware for the Lx / Ls controller if needed. Firmware updates and a Flash Loader utility program and instructions are available from the California Instruments website for this purpose. (www.calinst.com)

2. Introduction to SCPI

SCPI (Standard Commands for Programmable Instruments) is a programming language for controlling instrument functions over the IEEE-488. SCPI is layered on top of the hardware-portion of IEEE 488.2. The same SCPI commands and parameters control the same functions in different classes of instruments.

2.1 Conventions Used in This Manual

Angle brackets	<>	Items within angle brackets are parameter abbreviations. For example, <NR1> indicates a specific form of numerical data.
Vertical bar	|	Vertical bars separate alternative parameters. For example, NORM | TEXT indicates that either "TEXT" or "NORM" can be used as a parameter.
Square Brackets	[]	Items within square brackets are optional. The representation [SOURce:]LIST means that SOURce: may be omitted.
Braces	{}	Braces indicate parameters that may be repeated zero or more times. It is used especially for showing arrays. The notation <A> <,B> shows that parameter "A" must be entered, while parameter "B" may be omitted or may be entered one or more times.

2.2 The SCPI Commands and Messages

2.2.1 Types of SCPI Commands

SCPI has two types of commands, common and subsystem.

- Common commands generally are not related to specific operation but to

controlling overall AC source functions, such as reset, status, and synchronization. All common commands consist of a three-letter mnemonic preceded by an asterisk: *RST, *IDN?, *SRE 8

- Subsystem commands perform specific AC source functions. They are organized

  into an inverted tree structure with the "root" at the top. Some are single commands while others are grouped within specific subsystems.

Refer to appendix A for the AC source SCPI tree structure.

2.2.2 Types of SCPI Messages

There are two types of SCPI messages, *program* and *response*.

- A *program* message consists of one or more properly formatted SCPI commands sent from the controller to the AC source. The message, which may be sent at any time, requests the AC source to perform some action.
- A *response* message consists of data in a specific SCPI format sent from the AC source to the controller. The AC source sends the message only when commanded by a program message called a "query."

2.2.3 The SCPI Command Tree

As previously explained, the basic SCPI communication method involves sending one or more properly formatted commands from the SCPI command tree to the instrument as program messages. Figure 2-1 shows a portion of a subsystem command tree, from which you access the commands located along the various paths (you can see the complete tree in appendix A).

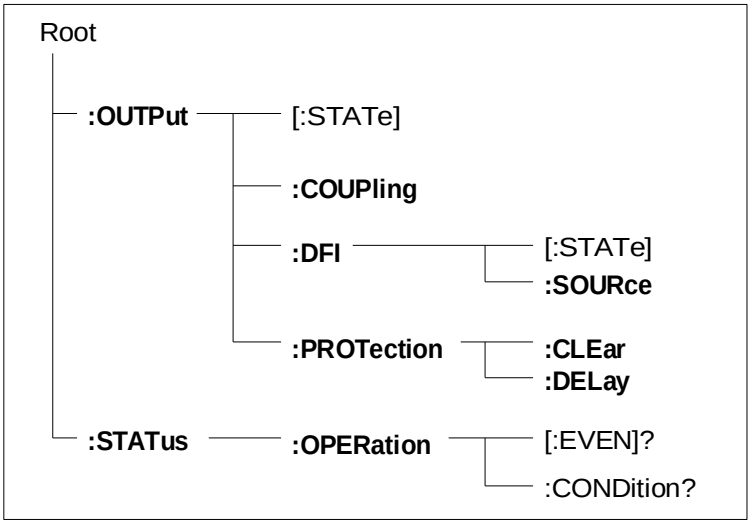

Figure 2-1: Partial Command Tree

The Root Level

Note the location of the ROOT node at the top of the tree. Commands at the root level are at the top level of the command tree. The SCPI interface is at this location when:

- the AC source is powered on
- a device clear (DCL) is sent to the AC source
- the SCPI interface encounters a message terminator (LF)
- the SCPI interface encounters a root specifier (:)

Active Header Path

In order to properly traverse the command tree, you must understand the concept of the active header path. When the AC source is turned on (or under any of the other conditions listed above), the active path is at the root. That means the SCPI interface is ready to accept any command at the root level, such as OUTPut or STATe.

If you enter OUTPut, the active header path moves one colon to the right. The interface is now ready to accept :STATe, :COUPling,:DFI, or :PROTection as the next header. You must include the colon, because it is required between headers.

If you now enter :PROTection, the active path again moves one colon to the right. The interface is now ready to accept either :CLEar or :DELay as the next header.

If you now enter :CLEar, you have reached the end of the command string. The active header path remains at :CLEar. If you wished, you could have entered :CLEar;DELay 20 and it would be accepted as a compound message consisting of:

1. OUTPut:PROTection:CLEAr and

2. OUTPut:PROTection:DELay 20.

The entire message would be:

OUTPut:PROTection:CLEar;DELay 20

The message terminator after DELay 20 returns the path to the root.

The Effect of Optional Headers

If a command includes optional headers, the interface assumes they are there. For example, if you enter OUTPut OFF, the interface recognizes it as OUTPut:STATe OFF. This returns the active path to the root (:OUTPut). But if you enter OUTPut:STATe OFF, then the active path remains at :STATe. This allows you to send

OUTPut:STATe OFF;PROTection:CLEar

in one message. If you tried to send

OUTPut OFF;PROTection:CLEar

the header path would return to :OUTPut instead of :PROTection.

The optional header [SOURce] precedes the current, frequency, function, phase, pulse, list, and voltage subsystems. This effectively makes :CURRent,:FREQuency, :FUNCtion, :PHASe, :PULse, :LIST, and :VOLTage root-level commands.

Moving Among Subsystems

In order to combine commands from different subsystems, you need to be able to restore the active path to the root. You do this with the root specifier (:). For example, you could clear the output protection and check the status of the Operation Condition register as follows:

OUTPut:PROTection:CLEAr

STATus:OPERation:CONDition?

Because the root specifier resets the command parser to the root, you can use the root specifier and do the same thing in one message:

OUTPut:PROTection:CLEAr;:STATus:OPERation:CONDition?

The following message shows how to combine commands from different subsystems as well as within the same subsystem:

VOLTage:LEVel 70;PROTection 80;:CURRent:LEVel 3;PROTection:STATe ON

Note the use of the optional header LEVel to maintain the correct path within the voltage and current subsystems and the use of the root specifier to move between subsystems.

Note: The "Enhanced Tree Walking Implementation" given in appendix A of the IEEE 488.2 standard is not implemented in the AC source.

Including Common Commands

You can combine common commands with system commands in the same message. Treat the common command as a message unit by separating it with a semicolon (the message unit separator). Common commands do not affect the active header path; you may insert them anywhere in the message.

VOLTage:TRIGger 7.5;INITialize;*TRG

OUTPut OFF;*RCL 2;OUTPut ON

2.3 Using Queries

Observe the following precautions with queries:

- Set up the proper number of variables for the returned data.
- Read back all the results of a query before sending another command to the AC source. Otherwise a Query Interrupted error will occur and the unreturned data will be lost.

2.4 Coupled Commands

When commands are coupled it means that the value sent by one command is affected by the settings of the other commands. The following commands are coupled in the AC source:

- the voltage and function shape commands
- the step, pulse, and list commands that control output voltages and function shapes
- the pulse commands that program the width, duty cycle, period, and the hold parameter
- the voltage range and current limit commands

As explained later in chapter 4, the order in which data is sent by these coupled commands can be important when more than one parameter is changed.

2.5 Structure of a SCPI Message

SCPI messages consist of one or more message units ending in a message terminator. The terminator is not part of the syntax, but implicit in the way your programming language indicates the end of a line (such as a newline or end-of-line character).

2.5.1 The Message Unit

The simplest SCPI command is a single message unit consisting of a command header (or keyword) followed by a message terminator.

ABORt<newline>

VOLTage?<newline>

The message unit may include a parameter after the header. The parameter usually is numeric, but it can be a string:

VOLTage 20<newline>

VOLTage MAX<newline>

2.5.2 Combining Message Units

The following command message is briefly described here, with details in subsequent paragraphs.

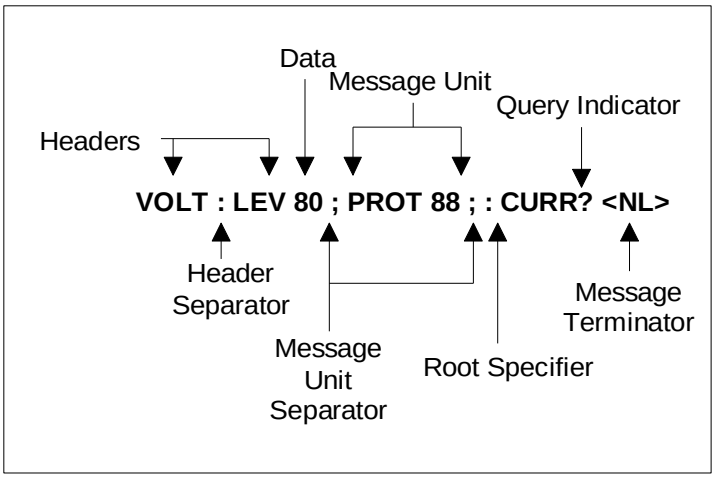

Figure 2-2: Command Message Structure

The basic parts of the above message are:

Message Component	Example
Headers	VOLT LEV PROT CURR
Header Separator	The colon in VOLT:LEV
Data	80 88
Data Separator	The space in VOLT 80 and PROT 88
Message Units	VOLT:LEV 80 PROT 88 CURR?
Message Unit Separator	The semicolons in VOLT:LEV 80; and PROT 88;
Root Specifier	The colon in PROT 88;:CURR?
Query Indicator	The question mark in CURR?
Message Terminator	The <NL> (newline) indicator. Terminators are not part of the SCPI syntax

2.5.3 Headers

Headers are instructions recognized by the AC source. Headers (which are sometimes known as "keywords") may be either in the long form or the short form.

Long Form — The header is completely spelled out, such as VOLTAGE, STATUS, and DELAY.

Short Form — The header has only the first three or four letters, such as VOLT, STAT, and DEL.

The SCPI interface is not sensitive to case. It will recognize any case mixture, such as TRIGGER, Trigger, TRIGger. Short form headers result in faster program execution.

Header Convention

In the command descriptions in chapter 3 of this manual, headers are emphasized with boldface type. The proper short form is shown in upper-case letters, such as DELay.

Header Separator

If a command has more than one header, you must separate them with a colon (VOLT:PROT OUTPut:RELay:POLarity).

Optional Headers

The use of some headers is optional. Optional headers are shown in brackets, such as OUTPut[:STATe] ON. As previously explained under "The Effect of Optional Headers", if you

combine two or more message units into a compound message, you may need to enter the optional header.

2.5.4 Query Indicator

Following a header with a question mark turns it into a query (VOLTage?, VOLTage:PROTection?). If a query contains a parameter, place the query indicator at the end of the last header (VOLTage:PROTection? MAX).

2.5.5 Message Unit Separator

When two or more message units are combined into a compound message, separate the units with a semicolon (STATus:OPERation?;QUEStionable?).

2.5.6 Root Specifier

When it precedes the first header of a message unit, the colon becomes the root specifier. It tells the command parser that this is the root or the top node of the command tree. Note the difference between root specifiers and header separators in the following examples:

OUTPut:PROTection:DELay .1	All colons are header separators
:OUTPut:PROTection:DELay .1	Only the first colon is a root specifier
OUTPut:PROTection:DELay .1;:VOLTage 12.5	Only the third colon is a root specifier

Note: You do not have to precede root-level commands with a colon; there is an implied colon in front of every root-level command.

2.5.7 Message Terminator

A terminator informs SCPI that it has reached the end of a message. Three permitted messages terminators are:

- newline (<NL>), which is ASCII decimal 10 or hex 0A.
- end or identify (<END>)
- both of the above (<NL><END>).

In the examples of this manual, there is an assumed message terminator at the end of each message. If the terminator needs to be shown, it is indicated as <NL> regardless of the actual terminator character.

2.6 SCPI Data Formats

All data programmed to or returned from the AC source is ASCII. The data may be numerical or character string.

2.6.1 Numerical Data Formats

Symbol	Data Form
Talking Formats	
<NR1>	Digits with an implied decimal point assumed at the right of the least-significant digit. Examples: 273
<NR2>	Digits with an explicit decimal point. Example: .0273
<NR3>	Digits with an explicit decimal point and an exponent. Example: 2.73E+2
<Bool>	Boolean Data. Example: 0 | 1or ON | OFF
Listening Formats	
<Nrf>	Extended format that includes <NR1>, <NR2> and <NR3>. Examples: 273 273. 2.73E2
<Nrf+>	Expanded decimal format that includes <Nrf> and MIN MAX. Examples: 273 273. 2.73E2 MAX. MIN and MAX are the minimum and maximum limit values that are implicit in the range specification for the parameter.
<Bool>	Boolean Data. Example: 0 | 1

Class	Suffix	Unit	Multiplier
Amplitude	V	Volt	MV (millivolt)
Current	A	Ampere	MA (milliamp)
Frequency	Hz	Hertz	KHZ (kilohertz)
Time	s	second	MS (millisecond)
	Common Multipliers		
	1E3	K	kilo
	1E-3	M	milli
	1E-6	U	micro

Table 2-1: Command parameters Suffixes and Multipliers

2.6.2 Character Data

Character strings returned by query statements may take either of the following forms, depending on the length of the returned string:

<CRD> Character Response Data. Permits the return of character strings.

<AARD> Arbitrary ASCII Response Data. Permits the return of undelimited 7-bit ASCII. This data type has an implied message terminator.

<SRD> String Response Data. Returns string parameters enclosed in double quotes.

3. System Considerations

This chapter addresses some system issues concerning programming. Specifically, these are AC source addressing and the use of the following IEEE-488 system interfaces:

- PC controller with National Instruments PCI-GPIB Interface.
- Agilent HP82335A PC Interface controller card

3.1 Assigning the IEEE-488 Address in Programs

The AC source address cannot be set remotely. It must be set from the front panel. Once the address is set, you can assign it inside programs. The following examples assume that the IEEE-488 select code is 7, and the AC source will be assigned to the variable ACS.

```
1070 ACS 706                !HP82335A Interface
1070 ASSIGN @ACS TO 706     !HP BASIC Interface
```

For systems using the National Instruments VISA or IVI drivers, the address is specified in the resource descriptor (GPIB::1).

3.2 Instrument Drivers and Application Software

Instrument drivers for National Instruments LabWindows/CVI and LabView are generally available for download from the California Instruments' web site at www.calinst.com. Also available are ready to use interactive graphical user interface (GUI) programs for download.

4. SCPI Command Reference

4.1 Introduction

This chapter provides a complete listing of all SCPI commands supported by the Lx\Ls Series of AC sources. Commands are grouped by function according the root level commands. Some general command related issues are:

Phases

If a command can apply to individual phases of an AC source, the entry "*Phase Selectable"* will appear in the command description.

Related Commands

Where appropriate, related commands or queries are included. These are listed because they are either directly related by function, or because reading about them will clarify or enhance your understanding of the original command or query.

This chapter is organized as follows:

- Subsystem commands, arranged by subsystem
- IEEE 488.2 common commands

4.2 Subsystem Commands

Subsystem commands are specific to AC source functions. They can be a single command or a group of commands. The groups are comprised of commands that extend one or more levels below the root. The description of common commands follows the description of the subsystem commands.

The subsystem command groups are listed in alphabetical order and the commands within each subsystem are grouped alphabetically under the subsystem. Commands followed by a question mark (?) take only the query form. When commands take both the command and query form, this is noted in the syntax descriptions.

You will find the subsystem command groups discussed on the following pages:

4.3 Calibration Subsystem

The commands in this subsystem allow you to do the following:

- Enter the calibration password
- Calibrate the current and voltage output levels, and store new calibration constants in nonvolatile memory.

Subsystem Syntax

```
CALibrate
    :MEASure
        :CURRent            Begin current measurement calibration sequence
            :SPHase         Query format returns single phase current mea coefficient.
        :VOLTage            Begin current measurement calibration sequence
    :PASSword Unlock calibration
    :SAVE                   Save new cal constants in non-volatile memory
    [:SOURce]
        PHASe               Phase offset calibration
        :VOLTage            Query output voltage cal coefficient
```

CALibrate:MEASure:CURRent

Phase Selectable

This command can only be used in calibration mode. It initiates the calibration of the ac current metering circuits. The query format returns the actual calibration coefficient. Use the INST:SEL or INST:NSEL to select the desired phase.

Command Syntax	CALibrate:MEASure:CURRent
Parameters	None
Query Syntax	CALibrate:MEASure:CURRent?
Returned Parameters	<NR3>
Examples	CAL:MEAS:CURR
Related Commands	CAL:SAVE CAL:MEAS:VOLT

CALibrate:MEASure:CURRent:SPHase

This command can only be used in calibration mode and in query form. It applies only to phase 1 (Lx) or A (Ls). It returns the single-phase mode current measurement calibration coefficient for Lx models and Ls models that have the –MODE option. If the Lx or Ls is in single phase mode, this command is equivalent to the the CAL:MEAS:CURR? query for phase 1/A except it can not be used to perform a calibration. It does not initiate a calibration. Use the CAL:MEAS:CURR? command to do this instead.

Query Syntax	CALibrate:MEASure:CURRent?
Returned Parameters	<NR3>
Examples	CAL:MEAS:CURR:SPH?
Related Commands	CAL:SAVE CAL:MEAS:VOLT

CALibrate:MEASure:VOLTage

Phase Selectable

This command can only be used in calibration mode. It initiates the calibration of the ac voltage metering circuits. The query format returns the actual calibration coefficient. Use the INST:SEL or INST:NSEL to select the desired phase.

Command Syntax	CALibrate:MEASure:VOLTage
Parameters	None
Query Syntax	CALibrate:MEASure:CURRent?
Returned Parameters	<NR3>
Examples	CAL:MEAS:VOLT
Related Commands	CAL:SAVE CAL:MEAS:CURR

CALibrate:PASSword

This command can only be used to unlock the calibration mode. Once unlocked, non-query calibration commands will be accepted. Query commands are always accepted.

Command Syntax	CALibrate:PASSword<NRf>
Parameters	<high voltage range> (default)
Examples	CAL:PASS 300
Related Commands	none

CALibrate:SAVE

This command can only be used in calibration mode. It saves any new calibration constants (after a current or voltage calibration procedure has been completed) in nonvolatile memory.

Command Syntax:	CALibrate:SAVE
Parameters	None
Examples	CAL:SAVE
Related Commands	CAL:CURR CAL:VOLT

CALibrate[:SOURce]:PHASe

Phase Selectable

This command can be used to set the phase calibration coefficient. Use the INST:SEL or INST:NSEL to select the desired phase. This allows the phase for voltage 2 and 3 (B and C) to be adjusted with respect to phase A. The query format returns the actual calibration coefficient

Command Syntax	CALibrate[:SOURce]:PHASe
Parameters	<NRf+>
Query Syntax	CALibrate[:SOURce]:PHASe?
Returned Parameters	<NR3>
Examples	CAL:PHAS 1.3
Related Commands	none

CALibrate[:SOURce]:VOLTage

Phase Selectable

This command can be used to query the output voltage calibration coefficient. Only the query format is available. Use the INST:SEL or INST:NSEL to select the desired phase.

Command Syntax	CALibrate[:SOURce]:VOLTage
Parameters	None
Query Syntax	CALibrate[:SOURce]:VOLTage?
Returned Parameters	<NR3>
Examples	CAL:VOLT?
Related Commands	none

4.4 Diagnostic Subsystem

These subsystem commands perform diagnostic functions which include reading and writing to the EEPROM, resetting the AC source and reading temperature.

Subsystem Syntax

DIAGnostic	
:RESet	Force power-on reset
:TEMPerature	
:AMBient?	Returns ambient temperature in °C

DIAGnostic:RESet

This commands forces a power-on reset.

Command Syntax	DIAGnostic:RESet
Parameters	None
Examples	DIAG:RES
Related Commands	*RST

DIAGnostic:TEMPerature:AMBient?

This query returns the temperature measured at the ambient sense thermistor in degrees C.

Query Syntax	DIAGnostic:TEMPerature:AMBient?
Parameters	None
Examples	DIAG:TEMP:AMB?
Returned Parameters	<NR3>

4.5 Instrument Subsystem

This subsystem programs the three-phase output capability of the AC Power Source.

Subsystem Syntax

INSTrument	
:COUPle ALL | NONE	Couple all phases for programming
:NSELect <n>	Select the output phase to program (1|2|3)
:SELect <output>	Select the output phase to program (OUTP1|OUTP2|OUTP3)

INSTrument:COUPle

In a three-phase power source it is convenient to set parameters of all three output phases simultaneously with one programming command. When INST:COUP ALL is programmed, sending a command to any phase will result in that command being sent to all three phases.

INSTrument:COUPle only affects the operation of subsequent commands. It does not by itself immediately affect the AC source's output. The commands that are affected by INSTrument:COUPle are those with the designation: Phase Selectable.

INSTrument:COUPle has no affect on queries. There is no way to query more than one phase with a single command. Directing queries to individual phases is done with INSTrument:NSELect.

Command Syntax	INSTrument:COUPle<coupling>
Parameters	ALL|NONE
*RST Value	ALL
Examples	INST:COUP ALL
Query Syntax	INSTrument:COUPle?
Returned Parameters	<CRD>
Related Commands	INST:NSEL

INSTrument:NSELect
INSTrument:SELect

These commands allow the selection of individual outputs in a three-phase model for subsequent commands or queries. Their operation is dependent on the setting of INSTrument:COUPle. If INST:COUP NONE is programmed, then the phase selectable commands are sent only to the particular output phase set by INSTrument:NSELect. If INST:COUP ALL is programmed, then all commands are sent to all three output phases.

INSTrument:NSELect selects the phase by its number, while INSTrument:SELect references it by name. These commands also select which output phase returns data when a query is sent.

Command Syntax	INSTrument:NSELect <NR1>
	INSTrument:SELect <output>
Parameters	For INST:NSEL: 1 | 2 | 3
	For INST:SEL: OUTPut1 | OUTPut2 | OUTPut3
*RST Value	1 or OUTPut1
Examples	INST:NSEL 3
Query Syntax	INSTrument:NSELect?
Returned Parameters	<NR1>
Related Commands	INST:COUP

4.6 Limit Subsystem

These subsystem commands may be used to query the hardware limits (capabilities) of the AC power source. These commands are protected and can only be used in query format.

Subsystem Syntax

LIMit	
:CURRent	Current limit setting
:FREQuency	
:HIGH	Frequency limit high
:LOW	Frequency limit low
:PHASe	Phase mode
:VOLTage	
:HIGH	Voltage limit high voltage range
:LOW	Voltage limit low voltage range

LIMit:CURRent

Query form returns the configuration current limit. This value determines the maximum current available from one amplifier in the low voltage range. Note that this is not the same as the available current maximum current, which is a function of voltage range and phase mode. To query the maximum available RMS current, use the CURR? MAX command.

Query Syntax	LIMit:CURRent?
Returned Parameters	<NR3>
Examples	LIM:CURR?
Related Commands	CURR

LIMit:FREQuency:HIGH

Query form returns the maximum available output frequency. This value determines the maximum frequency available using a sinusoidal waveform. Note that this is not the same as the available maximum frequency, which is a function of the frequency harmonic content of the waveform. To query the maximum available frequency, use the FREQ? MAX command.

Query Syntax	LIMit:FREQuency:HIGH?
Returned Parameters	<NR3>
Examples	LIM:FREQ:HIGH?
Related Commands	LIM:FREQ:LOW?

LIMit:FREQuency:LOW

Query form returns the maximum available output frequency. This value determines the minimum frequency available.

Query Syntax	LIMit:FREQuency:LOW?
Returned Parameters	<NR3>
Examples	LIM:FREQ:LOW?
Related Commands	LIM:FREQ:HIGH?

LIMit:PHASe

Query form returns the phase configuration setting. This value determines the phase mode of operation according to the table below:

Setting	Operation
0	Single-phase mode.
120	Three phase mode. Determines relative phase angle between phases A,

	B and C (ø1, ø2 and ø3). If the MODE field is set (standard on Lx Series, optional on Ls Series) the AC source can operate in both 1 and 3 phase modes.
Other	Any value other than 0 or 120 indicates 2 phase configuration with phase angle between A and B set to value shown.

Query Syntax	LIMit:PHASe?
Returned Parameters	<NR3>
Examples	LIM:PHAS?
Related Commands	SYST:CONF:NOUT?

LIMit:VOLTage:HIGH

Query form returns the maximum available output voltage for the high voltage range. This value determines the maximum AC RMS voltage available using a sinusoidal waveform. Note that this is not the same as the available maximum voltage, which is a function crest factor of the voltage waveform. To query the maximum available voltage, use the VOLT? MAX command.

Query Syntax	LIMit:VOLTage:HIGH?
Returned Parameters	<NR3>
Examples	LIM:VOLT:HIGH?
Related Commands	LIM:VOLT:LOW?

LIMit:VOLTage:LOW

Query form returns the maximum available output voltage for the low voltage range. This value determines the maximum AC RMS voltage available using a sinusoidal waveform. Note that this is not the same as the available maximum voltage, which is a function crest factor of the voltage waveform. To query the maximum available voltage, use the VOLT? MAX command.

Query Syntax	LIMit:VOLTage:LOW?
Returned Parameters	<NR3>
Examples	LIM:VOLT:LOW?
Related Commands	LIM:VOLT:HIGH?

4.7 Array Measurement Subsystem

This subsystem lets you retrieve arrays containing measurements data. Only current and voltage measurements are stored in an array. Two measurement commands are available: MEASure and FETCh. MEASure triggers the acquisition of new data before returning the readings from the array. FETCh returns previously acquired data from the array.

Individual outputs of a three-phase source are specified by the setting of INSTrument:NSELect.

Subsystem Syntax

MEASure | FETCh	
:ARRay	
:CURRent	
[:DC]?	Returns the digitized instantaneous current
:HARMonic	
[:AMPLitude]?	Returns amplitudes of the first 50 harmonics
:PHASe?	Returns phase angles of the first 50 harmonics
:MODE	Selects waveform data transfer format
:NEUTral	
[:DC]?	Returns the neutral digitized instantaneous current (3-phase only)
:HARMonic	
[:AMPLitude]?	Returns neutral current harmonic amplitude
:PHASe?	Returns neutral current harmonic phase
:VOLTage	
[:DC]?	Returns the digitized instantaneous voltage
:HARMonic	
[:AMPLitude]?	Returns amplitudes of the first 50 harmonics
:PHASe?	Returns phase angles of the first 50 harmonics

MEASure:ARRay:CURRent?
FETCh:ARRay:CURRent?

Phase Selectable

These queries return an array containing the instantaneous output current in amperes. The output voltage and current are digitized whenever a measure command is given or whenever an acquisition trigger occurs. The acquisition sampling time interval is set by SENSe:SWEep:TINTerval, and the position of the trigger relative to the beginning of the data buffer is determined by SENSe:SWEep:OFFSet:POINts.

Query Syntax	MEASure:ARRay:CURRent[:DC]? FETCh:ARRay:CURRent[:DC]?
Parameters	None
Examples	MEAS:ARR:CURR?FETC:ARR:CURR?
Returned Parameters	4096 NR3 values
Related Commands	INST:NSEL SENS:SWE

MEASure:ARRay:CURRent:HARMonic?
FETCh:ARRay:CURRent:HARMonic?

Phase Selectable

These queries return an array of harmonic amplitudes of output current in rms amperes. The first value returned is the dc component, the second value is the fundamental frequency, and so on up to the 50th harmonic. Harmonic orders can be measured up to the fundamental measurement

bandwidth of the measurement system, which is 16 kHz. Thus, the maximum harmonic that can be measured is dependent on the output frequency. Any harmonics that represent frequencies greater than 16 kHz are returned as 0.

Query Syntax	MEASure:ARRay:CURRent:HARMonic[:AMPLitude]?	
	FETCh:ARRay:CURRent:HARMonic[:AMPLitude]?	
Parameters	None	
Examples	MEAS:ARR:CURR:HARM?	FETC:ARR:CURR:HARM?
Returned Parameters	51 NR3 values	
Related Commands	INST:NSEL	

MEASure:ARRay:CURRent:HARMonic:PHASe?
FETCh:ARRay:CURRent:HARMonic:PHASe?

Phase Selectable

These queries return an array of harmonic phases of output current in degrees, referenced to the positive zero crossing of the fundamental component. The first value returned is the dc component (always returned as 0 degrees phase), the second value is the fundamental frequency, and so on up to the 50th harmonic. Harmonic orders can be measured up to the fundamental measurement bandwidth of the measurement system, which is 16 kHz. Thus, the maximum harmonic that can be measured is dependent on the output frequency. Any harmonics that represent frequencies greater than 16 kHz are returned as 0.

Query Syntax	MEASure:ARRay:CURRent:HARMonic:PHASe?<NRf>
	FETCh:ARRay:CURRent:HARMonic:PHASe?<NRf>
Parameters	None
Examples	MEAS:ARR:CURR:HARM:PHAS?
	FETC:ARR:CURR:HARM:PHAS?
Returned Parameters	51 NR3 values
Related Commands	INST:NSEL

MEASure:ARRay:CURRent:NEUTral?
FETCh:ARRay:CURRent:NEUTral?

These queries return an array containing the instantaneous output current of the neutral output terminal in amperes. The output voltage and current are digitized whenever a measure command is given or whenever an acquisition trigger occurs. The acquisition sampling time interval is set by SENSe:SWEep:TINTerval, and the position of the trigger relative to the beginning of the data buffer is determined by SENSe:SWEep:OFFSet:POINts.

Query Syntax	MEASure:ARRay:CURRent:NEUTral[:DC]?	
	FETCh:ARRay:CURRent:NEUTral[:DC]?	
Parameters	None	
Examples	MEAS:ARR:CURR:NEUT?	FETC:ARR:CURR:NEUT?
Returned Parameters	4096 NR3 values	
Related Commands	INST:NSEL SENS:SWE	

MEASure:ARRay:CURRent:NEUTral:HARMonic?
FETCh:ARRay:CURRent:NEUTral:HARMonic?

These queries return an array of harmonic amplitudes of output current of the neutral output terminal in rms amperes.

The first value returned is the dc component, the second value is the fundamental frequency, and so on up to the 50th harmonic. Harmonic orders can be measured up to the fundamental measurement bandwidth of the measurement system, which is 16 kHz. Thus, the maximum harmonic that can be measured is dependent on the output frequency. Any harmonics that represent frequencies greater than 16 kHz are returned as 0.

Query Syntax	MEASure:ARRay:CURRent:NEUTral:HARMonic[:AMPLitude]? FETCh:ARRay:CURRent:NEUTral:HARMonic[:AMPLitude]?
Parameters	None
Examples	MEAS:ARR:CURR:NEUT:HARM? FETC:ARR:CURR:NEUT:HARM?
Returned Parameters	51 NR3 values
Related Commands	INST:NSEL

MEASure:ARRay:CURRent:NEUTral:HARMonic:PHASe?
FETCh:ARRay:CURRent:NEUTral:HARMonic:PHASe?

These queries return an array of harmonic phases of output current of the neutral output terminal in degrees, referenced to the positive zero crossing of the fundamental component. The first value returned is the dc component (always returned as 0 degrees phase); the second value is the fundamental frequency, and so on up to the 50th harmonic. Harmonic orders can be measured up to the fundamental measurement bandwidth of the measurement system, which is 16 kHz. Thus, the maximum harmonic that can be measured is dependent on the output frequency. Any harmonics that represent frequencies greater than 16 kHz are returned as 0.

Query Syntax	MEASure:ARRay:CURRent:NEUTral:HARMonic:PHASe? FETCh:ARRay:CURRent:NEUTral:HARMonic:PHASe?
Parameters	None
Example	MEAS:ARR:CURR:NEUT:HARM:PHAS? FETC:ARR:CURR:NEUT:HARM:PHAS?
Returned Parameters	51 NR3 values
Related Commands	INST:NSEL

MEASure:ARRay:MODe

This command selects the waveform array data format to be used. The default mode is binary (BIN) which uses an IEEE floating point data format in which each data sample is transferred as a 4 byte floating point binary data word. Alternatively, an ASCII format may be selected (ASCii) in which each data sample is sent as 8 ASCII Hex values representing the 4 byte IEEE floating point data. Note that the transfer mode only applies to MEAS:ARR:VOLT and MEAS:ARR:CURR queries. All other measurement queries always return ASCII data. Note that at power on, the default mode is always set to binary (BIN).

Syntax	MEASure:ARRay:MODe Parameters BIN | ASCii
Examples	MEAS:ARR:MOD ASC
Related Commands	MEAS:ARR:VOLT MEAS:ARR:CURR

Note: The MEAS:ARR:MOD command is provided to allow waveform data transfers in ASCII on DBCS versions of MS Windows. Examples of DBCS versions are Chinese, Korean, Japanese etc. On most Windows versions, the binary mode can be used as it reduces the amount of data transferred and thus provides better throughput.

The ASCII mode will double the number of characters transferred so provisions for a larger receive buffer on the PC may have to be made. On the Lx/Ls, the full acquisition data size that can be sent with one command in BIN mode is 16KB, in ASC mode 32KB.

The binary data must be converted to a single precision floating point notation. Sample VB6 code is shown on the next page.

Conversion function sample VB6. Converting waveform data from either transfer mode to a single precision value can be accomplished using the following sample routine:

```
Public Function StringToIEEEFloat(ByVal sData As String, ByVal bAsciiMode As Boolean) As
Single
'==============================================================
'bAsciiMode flag is used if data is received as 8 ascii chars
'representing Hex 0-9,A-F. If bAsciiMode flag is false, then
'data is process as 4 char representing a byte each. Ascii
'mode is needed for DCBS windows
'==============================================================
  Dim i         As Integer
  Dim j         As Integer
  Dim iChar     As Integer
  Dim expo      As Long
  Dim mantisse  As Long
  Dim expo_val  As Variant
  Dim mant_f    As Single
  Dim c(3)      As Long    'Must use 32 bit integers to allow for
                      'intermediate result of 24 bit shift
  Dim sign      As Boolean
'==============================================================
Const MANT_MAX = &H7FFFFF
Const EXPO_MAX = 2 ^ 126
'==============================================================

On Error GoTo FloatConvError
  If bAsciiMode Then
    'Retrieve ASC values from eight hex byte input data
    sData = UCase(sData)
    For i = 0 To 3
      c(i) = 0
      For j = 0 To 1
        iChar = AscB(Mid$(sData, i * 2 + j + 1, 1)) - 48
        If iChar > 9 Then iChar = iChar - 7
        c(i) = c(i) * 16 * j + iChar
      Next j
    Next i
  Else
    'Retrieve ASC values from four byte input data
    'Note: Don't use ASCB or ASCW functions as results will differ
    'based on character sets, even on non DCBS Windows
    'Retrieve ASC values from four byte input data
    For i = 0 To 3
      c(i) = Asc(Mid$(sData, i + 1, 1))
    Next i
  End If
  'Get sign bit
  sign = ((c(0) And &H80) = &H80)
  'Get exponent value less sign bit
  expo = (c(0) And &H7F) * 2
  'Pick up exponent sign
  If (c(1) And &H80) = &H80 Then expo = expo Or 1
  'get data less exponent sign bit
  c(1) = c(1) And &H7F
  mantisse = c(1) * &H10000 + c(2) * &H100 + c(3)
  mant_f = mantisse / MANT_MAX
  'Process exponent
  If (expo <> 0) And (expo <> &HFF) Then
    expo = expo - 127
    mant_f = mant_f + 1
    expo_val = 2 ^ Abs(expo)
    If (expo > 0) Then mant_f = mant_f * expo_val
    If (expo < 0) Then mant_f = mant_f / expo_val
  Else
    If (mant_f <> 0) Then
      If expo = 0 Then
```

```
        mant_f = mant_f / EXPO_MAX
      Else
        mant_f = mant_f * EXPO_MAX
      End If
    End If
  End If
  'Append number sign and return value
  If sign Then mant_f = -mant_f
  StringToIEEEFloat = mant_f
Exit Function
'==========================================================

FloatConvError:
  'Conversion errors are truncated to zero
  StringToIEEEFloat = 0
  Exit Function

End Function
```

MEASure:ARRay:VOLTage?
FETCh:ARRay:VOLTage?

Phase Selectable

These queries return an array containing the instantaneous output voltage in volts. The output voltage and current are digitized whenever a measure command is given or whenever an acquire trigger occurs. If digitization is caused by a measure command, the time interval between samples is determined by the output frequency. For frequencies greater than 45 Hz, the time interval is 10.4 microseconds. If digitization is caused by an acquire trigger, the time interval is set by SENSe:SWEep:TINTerval, and the position of the trigger relative to the beginning of the data buffer is determined by SENSe:SWEep:OFFSet:POINts.

Query Syntax	MEASure:ARRay:VOLTage[:DC]? FETCh:ARRay:VOLTage[:DC]?
Parameters	None
Examples	MEAS:ARR:VOLT? FETC:ARR:VOLT?
Returned Parameters	4096 NR3 values
Related Commands	INST:NSEL SENS:SWE

MEASure:ARRay:VOLTage:HARMonic?
FETCh:ARRay:VOLTage:HARMonic?

Phase Selectable

These queries return an array of harmonic amplitudes of output voltage in rms volts. The first value returned is the dc component, the second value is the fundamental frequency, and so on up to the 50th harmonic. Harmonic orders can be measured up to the fundamental measurement bandwidth of the measurement system, which is 16 kHz. Thus, the maximum harmonic that can be measured is dependent on the output frequency. Any harmonics that represent frequencies greater than 16 kHz are returned as 0.

Query Syntax	MEASure:ARRay:VOLTage:HARMonic[:AMPLitude]? FETCh:ARRay:VOLTage:HARMonic[:AMPLitude]?
Parameters	None
Examples	MEAS:ARR:VOLT:HARM? FETC:ARR:VOLT:HARM?
Returned Parameters	51 NR3 values
Related Commands	INST:NSEL

4.8 Current Measurement Subsystem

This subsystem programs the current measurement capability of the 3000Lx and the 4500Lx. Two measurement commands are available: MEASure and FETCh.

MEASure triggers the acquisition of new measurement data before returning a reading.

FETCh returns a reading computed from previously acquired data.

Individual outputs of a three-phase source are specified by the setting of INSTrument:NSELect.

Subsystem Syntax

```
MEASure | FETCh
    [:SCALar]
    :CURRent
            [:DC]?                      Returns dc component of the current
            :AC?                        Returns ac rms current
            :ACDC?                      Returns ac+dc rms current
            :AMPLitude
                :MAX?                   Returns non-recurring peak current
                :RESet                  Clear the non-recurring peak current.
            :CREStfactor?               Returns current crestfactor
            :HARMonic
                [:AMPLitude]? <n>       Returns amplitude of the Nth harmonic of current
                :PHASe? <n>             Returns phase of the Nth harmonic of current
                :THD?                   Returns % of total harmonic distortion of current
            :NEUTral
                [:DC]?                  Returns neutral dc current (3-phase only)
                :AC?                    Returns neutral ac rms current (3-phase only)
                :ACDC?                  Returns neutral ac+dc rms current (3-phase only)
                :HARMonic
                    [:AMPLitude]? <n>   Returns neutral current harmonic amplitude
                    :PHASe? <n>         Returns neutral current harmonic phase
    :THD:MODE RMSQ | FUND               Sets THD calculation to either RMS or Fundamental
                                        mode.
```

MEASure:CURRent?
FETCh:CURRent?

Phase Selectable

These queries return the dc component of the output current being sourced at the output terminals.

Query Syntax	MEASure[:SCALar]:CURRent[:DC]? FETCh[:SCALar]:CURRent[:DC]?
Parameters	None
Examples	MEAS:CURR? FETC:CURR?
Returned Parameters	<NR3>
Related Commands	INST:NSEL

MEASure:CURRent:AC?
FETCh:CURRent:AC?

Phase Selectable

These queries return the ac component rms current being sourced at the output terminals.

Query Syntax	MEASure[:SCALar]:CURRent:AC? FETCh[:SCALar]:CURRent:AC?	
Parameters	None	
Examples	MEAS:CURR:AC?	FETC:CURR:AC?
Returned Parameters	<NR3>	
Related Commands	INST:NSEL	

MEASure:CURRent:ACDC?
FETCh:CURRent:ACDC?

Phase Selectable

These queries return the ac and dc components of the rms current being sourced at the output terminals.

Query Syntax	MEASure[:SCALar]:CURRent:ACDC? FETCh[:SCALar]:CURRent:ACDC?	
Parameters	None	
Examples	MEAS:CURR:ACDC?	FETC:CURR:ACDC?
Returned Parameters	<NR3>	
Related Commands	INST:NSEL	

MEASure:CURRent:AMPLitude:MAXimum?
FETCh:CURRent:AMPLitude:MAXimum?

Phase Selectable

These queries return the absolute value of the peak current as sampled over one measurement acquisition of 4096 data points. Note that the MEAS format returns the non-recurring peak current (as in a peak hold reading). This value can be cleared with the MEAS:CURR:AMP:RES command. The FETC format can be used to obtain the recurring or repetitive peak current this requires the acquisition to be triggered first by either an INIT:ACQ or a MEAS command for another paramter e.g. current, followed by the FETC:CURR:AMPL:MAX?

Query Syntax	MEASure[:SCALar]:CURRent:AMPLitude:MAXimum? FETCh[:SCALar]:CURRent:AMPLitude:MAXimum?	
Parameters	None	
Examples	MEAS:CURR:AMPL:MAX?	FETC:CURR:AMPL:MAX?
Returned Parameters	<NR3>	
Related Commands	INST:NSEL	

MEASure:CURRent:AMPLitude:RESet
FETCh:CURRent:AMPLitude:RESet

Phase Selectable

These command resets the peak current hold value returned with the MEAS:CURR:AMPL:MAX? query.

Syntax	MEASure[:SCALar]:CURRent:AMPLitude:RESet FETCh[:SCALar]:CURRent:AMPLitude:RESet	
Parameters	None	
Examples	MEAS:CURR:AMPL:RES	
Returned Parameters	None	
Related Commands	MEAS:CURR:AMPL:MAX?	FETC:CURR:AMPL:MAX?

MEASure:CURRent:CREStfactor?
FETCh:CURRent:CREStfactor?

Phase Selectable

These queries return the output current crest factor. This is the ratio of peak output current to rms output current.

Query Syntax	MEASure[:SCALar]:CURRent:CREStfactor? FETCh[:SCALar]:CURRent:CREStfactor?
Parameters	None
Examples	MEAS:CURR:CRES? FETC:CURR:CRES?
Returned Parameters	<NR3>
Related Commands	INST:NSEL

MEASure:CURRent:HARMonic?
FETCh:CURRent:HARMonic?

Phase Selectable

These queries return the rms amplitude of the Nth harmonic of output current. The parameter is the desired harmonic number. Queries sent with a value of 0 return the dc component. A value of 1 returns the fundamental output frequency. Harmonic orders can be measured up to the fundamental measurement bandwidth of the measurement system, which is 16 kHz. Thus, the maximum harmonic that can be measured is dependent on the output frequency. Any harmonics that represent frequencies greater than 16 kHz are returned as 0.

Query Syntax	MEASure[:SCALar]:CURRent:HARMonic[:AMPLitude]?<NRf> FETCh[:SCALar]:CURRent:HARMonic[:AMPLitude]?<NRf>
Parameters	0 to 50
Examples	MEAS:CURR:HARM? 3 FETC:CURR:HARM? 1
Returned Parameters	<NR3>
Related Commands	INST:NSEL

MEASure:CURRent:HARMonic:PHASe?
FETCh:CURRent:HARMonic:PHASe?

Phase Selectable

These queries return the phase angle of the Nth harmonic of output current, referenced to the positive zero crossing of the fundamental component. The parameter is the desired harmonic number. Queries sent with a value of 0 return the dc component. A value of 1 returns the fundamental output frequency. Harmonic orders can be measured up to the fundamental measurement bandwidth of the measurement system, which is 16 kHz. Thus, the maximum harmonic that can be measured is dependent on the output frequency. Any harmonics that represent frequencies greater than 16 kHz are returned as 0.

Query Syntax	MEASure[:SCALar]:CURRent:HARMonic:PHASe?<NRf> FETCh[:SCALar]:CURRent:HARMonic:PHASe?<NRf>
Parameters	0 to 50
Examples	MEAS:CURR:HARM:PHAS? 3 FETC:CURR:HARM:PHAS? 1
Returned Parameters	<NR3>
Related Commands	INST:NSEL

MEASure:CURRent:HARMonic:THD?
FETCh:CURRent:HARMonic:THD?

Phase Selectable

These queries return the percentage of total harmonic distortion and noise in the output current.

Query Syntax	MEASure[:SCALar]:CURRent:HARMonic:THD? FETCh[:SCALar]:CURRent:HARMonic:THD?
Parameters	None
Examples	MEAS:CURR:HARM:THD? FETC:CURR:HARM:THD?
Returned Parameters	<NR3>
Related Commands	INST:NSEL

MEASure:CURRent:NEUTral?
FETCh:CURRent:NEUTral?

These queries return the dc current in the neutral output terminal of a three-phase AC source.

Query Syntax	MEASure[:SCALar]:CURRent:NEUTral[:DC]? FETCh[:SCALar]:CURRent:NEUTral[:DC]?
Parameters	None
Examples	MEAS:CURR:NEUT? FETC:CURR:NEUT?
Returned Parameters	<NR3>
Related Commands	INST:NSEL

MEASure:CURRent:NEUTral:AC?
FETCh:CURRent:NEUTral:AC?

These queries return the ac rms current in the neutral output terminal of a three-phase AC source.

Query Syntax	MEASure[:SCALar]:CURRent:NEUTral:AC? FETCh[:SCALar]:CURRent:NEUTral:AC?
Parameters	None
Examples	MEAS:CURR:NEUT:AC? FETC:CURR:NEUT:AC?
Returned Parameters	<NR3>
Related Commands	INST:NSEL

MEASure:CURRent:NEUTral:ACDC?
FETCh:CURRent:NEUTral:ACDC?

These queries return the ac+dc rms current in the neutral output terminal of a three-phase AC source.

Query Syntax	MEASure[:SCALar]:CURRent:NEUTral:ACDC? FETCh[:SCALar]:CURRent:NEUTral:ACDC?
Parameters	None
Examples	MEAS:CURR:NEUT:ACDC? FETC:CURR:NEUT:ACDC?
Returned Parameters	<NR3>
Related Commands	INST:NSEL

MEASure:CURRent:NEUTral:HARMonic?
FETCh:CURRent:NEUTral:HARMonic?

These queries return the rms amplitude of the Nth harmonic of current in the neutral output terminal of a three-phase AC source. The parameter is the desired harmonic number. Queries sent with a value of 0 return the dc component. A value of 1 returns the fundamental output frequency. Harmonic orders can be measured up to the fundamental measurement bandwidth of the measurement system, which is 16 kHz. Thus, the maximum harmonic that can be measured is dependent on the output frequency. Any harmonics that represent frequencies greater than 16 kHz are returned as 0.

Query Syntax	MEASure[:SCALar]:CURRent:NEUTral:HARMonic [:AMPLitude]?<NRf> FETCh[:SCALar]:CURRent:NEUTral:HARMonic [:AMPLitude]?<NRf>
Parameters	0 to 50
Examples	MEAS:CURR:NEUT:HARM? 3 FETC:CURR:NEUT:HARM? 1
Returned Parameters	<NR3>
Related Commands	INST:NSEL

MEASure:CURRent:NEUTral:HARMonic:PHASe?
FETCh:CURRent:NEUTral:HARMonic:PHASe?

These queries return the phase angle of the Nth harmonic of current in the neutral output terminal of a three-phase, referenced to the positive zero crossing of the fundamental component.

The parameter is the desired harmonic number. Queries sent with a value of 0 return the dc component. A value of 1 returns the fundamental output frequency. Harmonic orders can be measured up to the fundamental measurement bandwidth of the measurement system, which is 16 kHz. Thus, the maximum harmonic that can be measured is dependent on the output frequency. Any harmonics that represent frequencies greater than 16 kHz are returned as 0.

Query Syntax	MEASure[:SCALar]:CURRent:NEUTral:HARMonic :PHASe?<NRf> FETCh[:SCALar]:CURRent:NEUTral:HARMonic :PHASe?<NRf>
Parameters	0 to 50
Examples	MEAS:CURR:NEUT:HARM:PHAS? 3 FETC:CURR:NEUT:HARM:PHAS? 1
Returned Parameters	<NR3>
Related Commands	INST:NSEL

MEASure:THDistortion:MODE

This command sets the calculation method for THD measurements. The distortion calculation is based on the H2 through H50 with the RMS voltage or current in the denominator. Note that some definitions of THD use the fundamental component (H1) of the voltage or as the denominator.

Lx/Ls units with firmware revision 0.88 or higher can be programmed to use the fundamental component as the denominator instead of the RMS value. This mode can only be programmed over the bus by sending the “MEAS:THD:MODE FUND” command. At power up or after a reset command, the mode will revert back to the RMS mode. This mode setting is not saved in any of the set up registers.

Syntax	MEASure:THDistortion:MODE
Parameters	RMSQuare | FUNDamental
Examples	MEAS:THD:MODE FUND
Query Syntax	MEAS:THD:MODE?
Returned Parameters	<CRD>
Related Commands	MEAS:VOLT:HARM:THD? MEAS:CURR:HARM:THD?

4.9 Frequency Measurement Subsystem

This subsystem programs the frequency measurement capability of the Lx\Ls Series. Two measurement commands are available: MEASure and FETCh. MEASure triggers the acquisition of new measurement data before returning a reading. FETCh returns a reading computed from previously acquired data.

Subsystem Syntax

```
MEASure | FETCh
    [:SCALar]
        :FREQuency?                    Returns the output frequency
```

MEASure:FREQuency?
FETCh:FREQuency?

This query returns the output frequency in Hertz.

Query Syntax	MEASure[:SCALar]:FREQuency? FETCh[:SCALar]:FREQuency?
Parameters	None
Examples	MEAS:FREQ? FETC:FREQ?
Returned Parameters	<NR3>

4.10 Power Measurement Subsystem

This subsystem programs the power measurement capability of the Lx\Ls Series. Two measurement commands are available: MEASure and FETCh. MEASure triggers the acquisition of new measurement data before returning a reading. FETCh returns a reading computed from previously acquired data.

Individual outputs of a three-phase source are specified by the setting of INSTrument:NSELect.

Subsystem Syntax

```
MEASure | FETCh
    [:SCALar]
        :POWer
            [:DC]?                  Returns the dc component of power
            :AC
                [:REAL]?            Returns real power
                :APParent?          Returns VA
                :REACtive?          Returns VAR
                :PFACtor?           Returns power factor
                :TOTal?             Returns real 3-phase total power
```

MEASure:POWer?
FETCh:POWer?

Phase Selectable

These queries return the dc component of the power being sourced at the output terminals in watts.

Query Syntax	MEASure[:SCALar]:POWer[:DC]? FETCh[:SCALar]:POWer[:DC]?
Parameters	None
Examples	MEAS:POW? FETC:POW?
Returned Parameters	<NR3>
Related Commands	INST:NSEL

MEASure:POWer:AC?
FETCh:POWer:AC?

Phase Selectable

These queries return the in-phase component of power being sourced at the output terminals in watts.

Query Syntax	MEASure[:SCALar]:POWer:AC[:REAL]? FETCh[:SCALar]:POWer:AC[:REAL]?
Parameters	None
Examples	MEAS:POW:AC? FETC:POW:AC?
Returned Parameters	<NR3>
Related Commands	INST:NSEL

MEASure:POWer:AC:APParent?
FETCh:POWer:AC:APParent?

Phase Selectable

These queries return the apparent power being sourced at the output terminals in volt-amperes.

Query Syntax	MEASure[:SCALar]:POWer:AC:APParent? FETCh[:SCALar]:POWer:AC:APParent?
Parameters	None
Examples	MEAS:POW:AC:APP? FETC:POW:AC:APP?
Returned Parameters	<NR3>
Related Commands	INST:NSEL

MEASure:POWer:AC:REACtive?
FETCh:POWer:AC:REACtive?

Phase Selectable

These queries return the reactive power being sourced at the output terminals in volt-amperes reactive. Reactive power is computed as:

VAR = sqrt(square(apparent power) - square(real power))

Query Syntax	MEASure[:SCALar]:POWer:AC:REACtive? FETCh[:SCALar]:POWer:AC:REACtive?
Parameters	None
Examples	MEAS:POW:AC:REAC?FETC:POW:AC:REAC?
Returned Parameters	<NR3>
Related Commands	INST:NSEL

MEASure:POWer:AC:PFACtor?
FETCh:POWer:AC:PFACtor?

Phase Selectable

These queries return the output power factor. The power factor is computed as:

pfactor = real power/apparent power

Query Syntax	MEASure[:SCALar]:POWer:AC:PFACtor? FETCh[:SCALar]:POWer:AC:PFACtor?
Parameters	None
Examples	MEAS:POW:AC:PFAC? FETC:POW:AC:PFAC?
Returned Parameters	<NR3>
Related Commands	INST:NSEL

MEASure:POWer:AC:TOTal?
FETCh:POWer:AC:TOTal?

These queries return the total power being sourced at the output terminals of a three-phase AC source.

Query Syntax	MEASure[:SCALar]:POWer:AC:TOTal? FETCh[:SCALar]:POWer:AC:TOTal?
Parameters	None
Examples	MEAS:POW:AC:TOT? FETC:POW:AC:TOT?
Returned Parameters	<NR3>

4.11 Voltage Measurement Subsystem

This subsystem programs the voltage measurement capability of the Lx\Ls Series. Two measurement commands are available: MEASure and FETCh. MEASure triggers the acquisition of new measurement data before returning a reading. FETCh returns a reading computed from previously acquired data.

Individual outputs of a three-phase source are specified by the setting of INSTrument:NSELect.

Subsystem Syntax

MEASure | FETCh	
[:SCALar]	
:VOLTage	
[:DC]?	Returns the dc component of the voltage
:AC?	Returns ac rms voltage
:ACDC?	Returns ac+dc rms voltage
:HARMonic	
[:AMPLitude]? <n>	Returns amplitude of the Nth harmonic of voltage
:PHASe? <n>	Returns phase of the Nth harmonic of voltage
:THD?	Returns % of total harmonic distortion of voltage
:THD:MODE RMS | FUND	Sets THD calculation to either RMS or Fundamental mode.

MEASure:VOLTage?
FETCh:VOLTage?

Phase Selectable

These queries return the dc component of the output voltage being sourced at the output terminals.

Query Syntax	MEASure[:SCALar]:VOLTage[:DC]? FETCh[:SCALar]:VOLTage[:DC]?
Parameters	None
Examples	MEAS:VOLT? FETC:VOLT?
Returned Parameters	<NR3>
Related Commands	INST:NSEL

MEASure:VOLTage:AC?
FETCh:VOLTage:AC?

Phase Selectable

These queries return the ac rms voltage being sourced at the output terminals.

Query Syntax	MEASure[:SCALar]:VOLTage:AC? FETCh[:SCALar]:VOLTage:AC?
Parameters	None
Examples	MEAS:VOLT:AC? FETC:VOLT:AC?
Returned Parameters	<NR3>
Related Commands	INST:NSEL

MEASure:VOLTage:ACDC?
FETCh:VOLTage:ACDC?

Phase Selectable

These queries return the ac or dc rms voltage being sourced at the output terminals.

Query Syntax	MEASure[:SCALar]:VOLTage:ACDC? FETCh[:SCALar]:VOLTage:ACDC?
Parameters	None
Examples	MEAS:VOLT:ACDC? FETC:VOLT:ACDC?
Returned Parameters	<NR3>
Related Commands	INST:NSEL

MEASure:VOLTage:HARMonic?
FETCh:VOLTage:HARMonic?

Phase Selectable

These queries return the rms amplitude of the Nth harmonic of output voltage. The parameter is the desired harmonic number. Queries sent with a value of 0 return the dc component. A value of 1 returns the fundamental output frequency. Harmonic orders can be measured up to the fundamental measurement bandwidth of the measurement system, which is 16 kHz. Thus, the maximum harmonic that can be measured is dependent on the output frequency. Any harmonics that represent frequencies greater than 16 kHz are returned as 0.

Query Syntax	MEASure[:SCALar]:VOLTage:HARMonic[:AMPLitude]?<NRf> FETCh[:SCALar]:VOLTage:HARMonic[:AMPLitude]?<NRf>
Parameters	0 to 50
Examples	MEAS:VOLT:HARM? 3 FETC:VOLT:HARM? 1
Returned Parameters	<NR3>
Related Commands	INST:NSEL

MEASure:VOLTage:HARMonic:PHASe?
FETCh:VOLTage:HARMonic:PHASe?

Phase Selectable

These queries return the phase angle of the Nth harmonic of output voltage, referenced to the positive zero crossing of the fundamental component. The parameter is the desired harmonic number. Queries sent with a value of 0 return the dc component. A value of 1 returns the fundamental output frequency. Harmonic orders can be measured up to the fundamental measurement bandwidth of the measurement system, which is 16 kHz. Thus, the maximum harmonic that can be measured is dependent on the output frequency. Any harmonics that represent frequencies greater than 16 kHz are returned as 0.

Query Syntax	MEASure[:SCALar]:VOLTage:HARMonic:PHASe?<NRf> FETCh[:SCALar]:VOLTage:HARMonic:PHASe?<NRf>
Parameters	0 to 50
Examples	MEAS:VOLT:HARM:PHAS? 3 FETC:VOLT:HARM:PHAS? 1
Returned Parameters	<NR3>
Related Commands	INST:NSEL

MEASure:VOLTage:HARMonic:THD?
FETCh:VOLTage:HARMonic:THD?

Phase Selectable

These queries return the percentage of total harmonic distortion and noise in the output voltage.

Query Syntax	MEASure[:SCALar]:VOLTage:HARMonic:THD? FETCh[:SCALar]:VOLTage:HARMonic:THD?	
Parameters	None	
Examples	MEAS:VOLT:HARM:THD?	FETC:VOLT:HARM:THD?
Returned Parameters	<NR3>	
Related Commands	INST:NSEL	

MEASure:THDistortion:MODE

This command sets the calculation method for THD measurements. The distortion calculation is based on the H2 through H50 with the RMS voltage or current in the denominator. Note that some definitions of THD use the fundamental component (H1) of the voltage or as the denominator.

Lx/Ls units with firmware revision 0.88 or higher can be programmed to use the fundamental component as the denominator instead of the RMS value. This mode can only be programmed over the bus by sending the “MEAS:THD:MODE FUND” command. At power up or after a reset command, the mode will revert back to the RMS mode. This mode setting is not saved in any of the set up registers.

Syntax	MEASure:THDistortion:MODE	
Parameters	RMSQuare | FUNDamental	
Examples	MEAS:THD:MODE FUND	
Query Syntax	MEAS:THD:MODE?	
Returned Parameters	<CRD>	
Related Commands	MEAS:VOLT:HARM:THD?	MEAS:CURR:HARM:THD?

4.12 Output Subsystem

This subsystem controls the main outputs, the signal outputs, the power-on state, and the output protection function of the Lx/Ls Series.

Subsystem Syntax

```
OUTPut
    [:STATe] <bool>                 Enable/disable output voltage, current, power, etc.
    :DFI
        [:STATE] <bool>             Enable/disable DFI output
        :SOURce <source>            Selects an event source (QUES|OPER|ESB|RQS|OFF)
    :PON
        :STATe RST | RCL0           Set power-on state to *RST or *RCL0
    :PROTection
        :CLEar                      Reset latched protection
        :DELay <n>                  Delay after programming/before protection
    :RI
        :MODE <mode>                set remote inhibit input (LATC|LIVE|OFF)
    :TTLTrg
        :MODE TRIG | FSTR           Sets or disabled Function strobe mode.
        [:STATE] <bool>             Enable/disable trigger out drive
        :SOURce <source>            Selects a TTLTrg source (BOT|EOT|LIST)
```

OUTPut

This command enables or disables the AC source output. The state of a disabled output is an output voltage amplitude set to 0 volts, with output relays opened.

The query form returns the output state.

Command Syntax	OUTPut[:STATe]<bool>	
Parameters	0 | OFF | 1 | ON	
*RST Value	OFF	
Examples	OUTP 1	OUTP:STAT ON
Query Syntax	OUTPut[:STATe]?	
Returned Parameters	0 | 1	
Related Commands	*RCL *SAV	

OUTPut:DFI

This command enables or disables the discrete fault indicator (DFI) signal to the Lx\Ls Series.

Command Syntax	OUTPut:DFI[:STATe]<bool>	
Parameters	0|1|OFF|ON	
*RST Value	OFF	
Examples	OUTP:DFI 1	OUTP:DFI OFF
Query Syntax	OUTPut:DFI[:STATe]?	
Returned Parameters	0 | 1	
Related Commands	OUTP:DFI:SOUR	

OUTPut:DFI:SOURce

This command selects the source for DFI events. The choices are:

QUEStionable	Questionable summary bit
OPERation	Operation summary bit
ESB	Standard Event summary bit
RQS	Request Service summary bit
OFF	Never true

Command Syntax	OUTP:DFI:SOUR<source>
Parameters	QUES | OPER | ESP | RQS | OFF
*RST Value	OFF
Examples	OUTP:DFI:SOUR OPER
Query Syntax	OUTPut:DFI:SOUR?
Returned Parameters	<CRD>
Related Commands	OUTP:DFI

OUTPut:PON:STATe

This command selects the power-on state of the AC source. The following states can be selected:

RST	Sets the power-on state to *RST. Refer to the *RST command as described later in this chapter for more information.
RCL0	Sets the power-on state to *RCL 0. Refer to the *RCL command as described later in this chapter for more information.

Command Syntax	OUTPut:PON:STATE <state>
Parameters	RST | RCL0
Examples	OUTP:PON:STAT RST
Query Syntax	OUTPut:PON:STATe?
Returned Parameters	<CRD>
Related Commands	*RST *RCL

OUTPut:PROTection:CLEar

This command clears the latch that disables the output when an overvoltage (OV), overcurrent (OC), overtemperature (OT), or remote inhibit (RI) fault condition is detected. All conditions that generated the fault must be removed before the latch can be cleared. The output is then restored to the state it was in before the fault condition occurred.

Command Syntax	OUTPut:PROTection:CLEar
Parameters	None
Examples	OUTP:PROT:CLE
Related Commands	OUTP:PROT:DEL *RCL *SAV

OUTPut:PROTection:DELay

This command sets the delay time between the programming of an output change that produces a CL or UNREG status condition and the recording of that condition by the Status Operation Condition register. The delay prevents momentary changes in status that can occur during programming from being registered as events by the status subsystem. In most cases these temporary conditions are not considered an event, and to record them as such would be a nuisance.

Command Syntax	OUTPut:PROTection:DELay<NRf>
Parameters	0 to 32 | MINimum | MAXimum
Unit	S (seconds)
*RST Value	100 milliseconds
Examples	OUTP:PROT:DEL 75E-1
Query Syntax	OUTPut:PROTection:DELay?
Returned Parameters	<NR3>
Related Commands	OUTP:PROT:CLE *RCL *SAV

OUTPut:RI:MODE

This command selects the mode of operation of the Remote Inhibit protection. The following modes can be selected:

LATChing	A TTL low at the RI input latches the output in the protection shutdown state, which can only be cleared by OUTPut:PROTection:CLEar.
LIVE	The output state follows the state of the RI input. A TTL low at the RI input turns the output off; a TTL high turns the output on.
OFF	The instrument ignores the RI input.

The RI output state is saved as part of an instrument setup using the *SAV command. It can be made part of the power on setting if needed. The default state is LIVE.

Command Syntax	OUTPut:RI:MODE <mode>
Parameters	LATChing | LIVE | OFF
*RST Value	OFF
Examples	OUTP:RI:MODE LIVE
Query Syntax	OUTPut:RI:MODE?
Returned Parameters	<CRD>
Related Commands	OUTP:PROT:CLE

OUTPut:TTLTrg:MODE

This command sets the operation of the Trigger Out1 signal to either Function Strobe or Trigger mode. Factory default is Trigger state which means the OUTP:TTLT:STAT command is required to generate outputs. This mode is compatible with the Agilent HP6834B models. In Function Strobe mode, an output pulse is generated automatically any time an output parameter such as voltage, frequency or phase is programmed. The AC source Trigger Out1 signal is available at a SMA connector on the rear of the Lx\Ls Series units.

Command Syntax	OUTPut:TTLTrg:MODE TRIG | FSTR
Parameters	TRIG | FSTR
*RST Value	TRIG
Examples	OUTP:TTLT:MODE FSTR
Query Syntax	OUTPut:TTLTrg:MODE?
Returned Parameters	<CRD>
Related Commands	OUTP:TTLT:STAT

OUTPut:TTLTrg[:STATe]

This command enables or disables the AC source Trigger Out1 signal, which is available at a SMA connector on the rear of the Lx\Ls Series units.

Command Syntax	OUTPut:TTLTrg[:STATe]<bool>
Parameters	0|1|OFF|ON
*RST Value	OFF
Examples	OUTP:TTLT 1 OUTP:TTLT OFF
Query Syntax	OUTPut:TTLTrg[:STATe]?
Returned Parameters	0 | 1
Related Commands	OUTP:TTLT:SOUR

OUTPut:TTLTrg:SOURce

This command selects the signal source for the Trig Out1 signal as follows:

- BOT Beginning of transient output
- EOT End of transient output
- LIST Specified by the TTLTrg list

When an event becomes true at the selected TTLTrg source, a pulse is sent to the SMA connector on the rear of the AC source.

Command Syntax	OUTPut:TTLTrg:SOURce<source>
Parameters	BOT | EOT | LIST
*RST Value	BOT
Examples	OUTP:TTLT:SOUR LIST
Query Syntax	OUTPut:TTLTrg:SOURce?
Returned Parameters	<CRD>
Related Commands	OUTP:TTLT

4.13 Power On Subsystem

This subsystem controls the specific configuration settings at power on. Most power on settings are determined by the power on register recall state using the OUTPut:PON:STATe command. Some aspects are not part of a register however and must be controlled using the PONS commands.

Subsystem Syntax

PONSetup	
:CLOCk	STD | MAST | AUX
:PEAK:CURRent[:PROTection]	Disables peak current protection.

PONSetup:CLOCk

This command is used to set the clock and lock mode at power up. It is factory set and should not be changed unless the configuration has been modified in the field. Units with the –LKM option are fixed to MAST mode. Units with the –LKS option can be set to either STANdalone or AUX. When set to AUX, the –LKS unit will power up in external clock mode. When set to STANDalone, the –LKS unit will power up in internal clock mode. The –LKM unit always powers up in internal clock mode. It's clock state cannot be changed.

Command Syntax	PONSetup:CLOCk
Parameters	STANdalone | MASTer | AUXiliary
Examples	PONS:CLOC
Query Syntax	PONS:CLOC?
Returned Parameters	<CRD>
Related Commands	None

PONSetup:PEAK:CURRent[:PROTection]

This command can be used to disable the peak current shutdown mode. It is factory disabled and should be left disabled for most situations. This command is not available on the HP6834B/CI4500iL.

Command Syntax	PONSetup:PEAK:CURRent[:PROTection]
Parameters	0 | 1 | OFF | ON
Examples	PONS:PEAK:CURR 1
Query Syntax	PONS:PEAK:CURR?
Returned Parameters	0 | 1
Related Commands	OUTP:PROT:DEL

4.14 Sense Subsystem - Sweep

This subsystem controls the measurement current range and the data acquire sequence of the AC source.

Subsystem Syntax

SENSe	
[:COUPle] AC | DC	ADC coupling mode.
:SWEep	
:OFFSet	Define trigger delay in time relative to start of the digitizer data record
:POINts <n>	Define trigger points relative to the start of the digitizer data record
:TINTerval <n>	Sets the digitizer sample spacing

SENSe[:COUPle]

This command sets the coupling mode for the ADC of the measurement system. Available coupling modes are AC or DC. Factory default is DC coupled. This command requires firmware revision 0.95 or higher.

Command Syntax	SENSe[:COUPle] <CRD>
Parameters	AC | DC
*RST Value	DC
Examples	SENS:COUP DC
Query Syntax	SENS:COUP?
Returned Parameters	<CRD>
Related Commands	SENS:SWE:TINT

SENSe:SWEep:OFFSet

This command defines the trigger point expressed in seconds relative to the start of the returned data record when an acquire trigger is used. The values can range from MIN to MAX depending on the phase mode and the selected sample interval. When the values are negative, the values in the beginning of the data record represent samples taken prior to the trigger.

Command Syntax	SENSe:SWEep:OFFSet <NRf+>	
Parameters	<NRf> | MINimum | MAXimum	
*RST Value	0	
Examples	SENS:SWE:OFFS -12E-3	
Query Syntax	SENSe:SWEep:OFFSet?	
Returned Parameters	<NR3>	
Related Commands	SENS:SWE:TINT	MEAS:ARR

SENSe:SWEep:OFFSet:POINts

This command defines the trigger point expressed in sample points relative to the start of the returned data record when an acquire trigger is used. The values can range from -4095 to 2E9. When the values are negative, the values in the beginning of the data record represent samples taken prior to the trigger.

Command Syntax	SENSe:SWEep:OFFSet:POINts<NRf+>
Parameters	4096 through 2E9 | MINimum | MAXimum
*RST Value	0
Examples	SENS:SWE:OFFS:POIN -2047
Query Syntax	SENSe:SWEep:OFFSet:POINts?
Returned Parameters	<NR3>
Related Commands	SENS:SWE:TINT MEAS:ARR

SENSe:SWEep:TINTerval

This command defines the time period between samples. The sample period can be programmed from 10.42 to 104.2 microseconds in 10 microsecond increments in single-phase mode and from 31.25 to 312.5 microseconds in three-phase mode.

All the MEASure commands use the ACQuire trigger sequence implicitly. These commands always set the sample period to 21 microseconds.

Command Syntax	SENSe:SWEep:TINTerval<NRf+>
Parameters	10.42 through 104.2 (microseconds)
*RST Value	10.42 us
Examples	SENS:SWE:TINT 100
Query Syntax	SENSe:SWEep:TINTerval?
Returned Parameters	<NR3>
Related Commands	SENS:SWE:OFFS:POIN MEAS:ARR

4.15 Source Subsystem - Current

This subsystem programs the output current of the AC source.

Subsystem Syntax

```
[SOURce:]
    CURRent
        [:LEVel]
            [:IMMediate]
                [:AMPLitude] <n>        Sets the rms current limit
        :PROTection
            :DELay                      Current limit fault delay
            :STATe <bool>               Enable/Disable rms current limit protection
```

CURRent

Phase Selectable

This command sets the rms current limit of the specified output phase. If the output current exceeds this limit, the output voltage amplitude is reduced until the rms current is within the limit. The CL bit of the questionable status register indicates that the current limit control loop is active. If the current protection state is programmed on, the output latches into a disabled state when current limiting occurs.

Note that the CURRent command is coupled with the VOLTage:RANGe.This means that the maximum current limit that can be programmed at a given time depends on the voltage range setting in which the unit is presently operating. Refer to Section 6.3 under "Coupled Commands" for more information. To determine the maximum available current, use the “curr? max” query

Command Syntax	[SOURce:]CURRent[:LEVel] [:IMMediate][:AMPLitude]<NRf+>
Parameters	0 to max. available current
Unit:	A (rms amperes)
*RST	1
Examples	CURR 5.0 CURR:LEV .5.0
Query Syntax	[SOURce:]CURRent[:LEVel] [:IMMediate][:AMPLitude]?
Returned Parameters	<NR3>
Related Commands	CURR:PROT:STAT VOLT:RANG

CURRent:PROTection:DELay

This command holds off the over current trip of the output voltage for the time specificied. Default value at *RST is 0.1 sec. The range is from 0.1 to 5.000 secs and can be queries with the CURR:PROT:DEL? MIN and CURR:PROT:DEL? MAX commands.

Command Syntax	[SOURce:]CURRent:PROTection:DELay <NRf+>
Parameters	0.100 to 5.000 | MINimum | MAXimum
Unit:	S (seconds)
*RST Value	0.100
Examples	CURR:PROT:DEL 1.5
Query Syntax	[SOURce:]CURRent:PROTection:DELay? CURRent:PROTection:DELay? Min CURRent:PROTection:DELay? Max
Returned Parameters	<NR3>
Related Commands	CURR:PROT:STAT

CURRent:PROTection:STATe

This command enables or disables the AC source overcurrent (OC) protection function. If the overcurrent protection function is enabled and the AC source exceeds the programmed level, then the output is disabled and the Questionable Condition status register OC bit is set (see Chapter 7). An overcurrent condition can be cleared with OUTPut:PROTection:CLEar after the cause of the condition is removed.

Use OUTP:PROT:DEL to prevent momentary current limit conditions caused by programmed output changes from tripping the over current protection. Use CURR:PROT:DEL to hold off tripping the output due to temporary overload conditions.

Command Syntax	[SOURce:]CURRent:PROTection:STATe<bool>
Parameters	0 | 1 | OFF | ON
*RST Value	OFF
Examples	CURR:PROT:STAT 0 CURR:PROT:STAT OFF
Query Syntax	[SOURce:]CURRent:PROTection:STATe?
Returned Parameters	0 | 1
Related Commands	OUTP:PROT:CLE CURR:PROT:DEL

4.16 Source Subsystem - Frequency

This subsystem programs the output frequency of the AC source.

Subsystem Syntax

```
[SOURce:]
    FREQuency
        [:CW | :IMMediate] <n>          Sets the frequency
        :MODE <mode>                    Sets frequency mode (FIX|STEP|PULS|LIST|SENS|EXT)
        :SLEW
            [:IMMediate] <n> | INFinity Sets the frequency slew rate
            :MODE <mode>                Sets frequency slew mode (FIX|STEP|PULS|LIST)
            :TRIGgered <n> | INFinity   Sets the triggered frequency slew rate
        :TRIGgered <n>                  Sets the triggered frequency
```

FREQuency

This command sets the frequency of the output waveform.

Command Syntax	[SOURce:]FREQuency[:CW|:IMMediate]<NRf+>
Parameters	45 to 5000
Unit	HZ (Hertz)
*RST Value	60 Hz
Examples	FREQ 50
Query Syntax	[SOURce:]FREQuency?
Returned Parameters	<NR3>
Related Commands	FREQ:MODE FREQ:SLEW

FREQuency:MODE

This command determines how the output frequency is controlled. Available modes are:

FIXed	The output frequency is unaffected by a triggered output transient. The clock source is the internal controller timebase.
STEP	The output frequency is programmed to the value set by FREQuency:TRIGgered when a triggered transient occurs.
PULSe	The output frequency is changed to the value set by FREQuency:TRIGgered for a duration determined by the pulse commands.
LIST	The output frequency is controlled by the frequency list when a triggered transient occurs.
SENSe	External sync or line sync clock mode. The frequency is synchronized to the external sync or line sync frequency.
EXTernal	External clock mode. This mode is used on an Lx/Ls unit with the –LKS option to sync to a master Lx/Ls unit.

Command Syntax	[SOURce:]FREQuency:MODE<mode>
Parameters	FIXed | STEP | PULSe | LIST | SENSe | EXTernal
*RST Value	FIXed
Examples	FREQ:MODE FIX
Query Syntax	[SOURce:]FREQuency:MODE?
Returned Parameters	<CRD>
Related Commands	FREQ FREQ:TRIG

FREQuency:SLEW

This command sets the rate at which frequency changes for all programmed changes in output frequency. Instantaneous frequency changes can be obtained by sending MAXimum or INFinity. The SCPI keyword INFinity is represented by the number 9.9E37.

Command Syntax	[SOURce:]FREQuency:SLEW[:IMMediate]<NRf+> |INFinity
Parameters	1E-3 to 9.9E37 | INFinity |MINimum | MAXimum
Unit	HZ (Hertz per second)
*RST Value	MAXimum
Examples	FREQ:SLEW:IMM 75 FREQ:SLEW MAX
Query Syntax	[SOURce:]FREQuency:SLEW?
Returned Parameters	<NR3>
Related Commands	FREQ:SLEW:MODE FREQ

FREQuency:SLEW:MODE

This command determines how the frequency slew rate is controlled during a triggered output transient. The choices are:

FIXed	The frequency slew rate is unaffected by a triggered output transient.
STEP	The frequency slew rate is programmed to the value set by FREQuency:TRIGgered when a triggered transient occurs.
PULSe	The frequency slew rate is changed to the value set by FREQuency:TRIGgered for a duration determined by the pulse commands.
LIST	The frequency slew rate is controlled by the frequency list when a triggered transient occurs.

Command Syntax	[SOURce:]FREQuency:SLEW:MODE<mode>
Parameters	FIXed | STEP | PULSe | LIST
*RST Value	FIXed
Examples	FREQ:SLEW:MODE FIX
Query Syntax	[SOURce:]FREQuency:SLEW:MODE?
Returned Parameters	<CRD>
Related Commands	FREQ FREQ:SLEW:TRIG

FREQency:SLEW:TRIGgered

This command sets the rate at which frequency changes during a triggered output transient. Instantaneous frequency changes can be obtained by sending MAXimum or INFinity. The SCPI keyword INFinity is represented by the number 9.9E37.

Command Syntax	[SOURce:]FREQuency:SLEW:TRIGgered<NRf+> |INFinity
Parameters	1E-3 to 9.9E37 | INFinity |MINimum | MAXimum
Unit	HZ (Hertz per second)
*RST Value	MAXimum
Examples	FREQ:SLEW:TRIG 75 FREQ:SLEW:TRIG MAX
Query Syntax	[SOURce:]FREQuency:SLEW:TRIG?
Returned Parameters	<NR3>
Related Commands	FREQ:SLEW:MODE FREQ

FREQuency:TRIGgered

This command programs the frequency that the output will be set to during a triggered step or pulse transient.

Command Syntax	[SOURce:]FREQuency:TRIGgered<NRf+>
Parameters	Refer to specifications table in User Manual
Unit	HZ (Hertz)
*RST Value	60 Hz
Example	FREQ:TRIG 50
Query Syntax	[SOURce:]FREQuency:TRIGgered?
Returned Parameters	<NR3>
Related Commands	FREQ FREQ:MODE

4.17 Source Subsystem - Function

This subsystem programs the output function of the AC source.

Subsystem Syntax

```
[SOURce:]
    FUNCtion
        [:SHAPe]
            [:IMMediate] <shape>        Sets the periodic waveform shape
                                        (SIN|SQU|CSIN|<user-defined>)
            :MODE <mode>                Sets the waveform shape mode (FIX|STEP|PULS|LIST)
            :TRIGgered <shape>          Sets the triggered transient shape
                                        (SIN|SQU|CSIN|<user-defined>)
            :CSINusoid <n> [THD]        Sets the % of peak at which the clipped sine clips (or %
                                        THD)
```

FUNCtion

This command selects the shape of the output voltage waveform as follows:

SINusoid	A sinewave is output
SQUare	A squarewave is output
CSINusoid	The output is a clipped sine waveform. Both positive and negative peak amplitudes are clipped at a value determined by the SOURce:FUNCtion:SHAPe:CSINusoid setting.
<user_defined>	The output shape is described by one of the user-defined waveform tables.

The maximum peak voltage that the AC source can output is 425 V peak. This includes any combination of voltage and function shape values. Therefore, the maximum value that can be programmed depends on the peak-to-rms ratio of the selected waveform. For a sinewave, the maximum voltage that can be programmed is 300 V rms.

Before programming a different waveform shape, the output voltage should be programmed to zero volts. After the shape is changed, the voltage maybe programmed to the desired value.

Note: You cannot program a voltage that produces a higher volt-second on the output than a 300V rms sinewave.

Command Syntax	[SOURce:]FUNCtion[:SHAPe][:IMMediate]<shape>
Parameters	SINusoid|SQUare|CSINusoid|<waveform_name>
*RST Value	SINusoid
Examples	FUNC SIN FUNC USERNAME
Query Syntax	[SOURce:]FUNCtion[:SHAPe]?
Returned Parameters	<CRD>
Related Commands	FUNC:MODE FUNC:TRIGVOLT

FUNCtion:MODE

This command determines how the waveform shape is controlled during a triggered output transient. The choices are:

FIXed	The waveform shape is unaffected by a triggered output transient.
STEP	The waveform shape is programmed to the value set by FUNCtion:TRIGgered when a triggered transient occurs.

PULSe	The waveform shape is changed to the value set by FUNCtion:TRIGgered for a duration determined by the pulse commands.
LIST	The waveform shape is controlled by the waveform shape list when a triggered transient occurs.

Command Syntax	[SOURce:]FUNCtion[:SHAPe]:MODE<mode>
Parameters	FIXed | STEP | PULSe | LIST
*RST Value	FIXed
Examples	FUNC:MODE FIX
Query Syntax	[SOURce:]FUNCtion[:SHAPe]:MODE?
Returned Parameters	<CRD>
Related Commands	FUNC FUNC:TRIG

FUNCtion:TRIGgered

This command selects the shape of the output voltage waveform when a triggered step or pulse transient occurs. The parameters are:

SINusoid	A sinewave is output
SQUare	A squarewave is output
CSINusoid	The output is a clipped sine waveform. Both positive and negative peak amplitudes are clipped at a value determined by SOURce:FUNCtion:SHAPe:CSINusoid.
<waveform_name>	The output shape is described by one of the user-defined waveform tables.

The maximum peak voltage that the AC source can output is 425 V peak. This includes any combination of voltage and function shape values. Therefore, the maximum value that can be programmed depends on the peak-to-rms ratio of the selected waveform. For a sinewave, the maximum voltage that can be programmed is 300 V rms.

Note: You cannot program a voltage that produces a higher volt-second on the output than a 300V rms sinewave.

Command Syntax	[SOURce:]FUNCtion[:SHAPe]:TRIGgered<shape>
Parameters	SINusoid|SQUare|CSINusoid|<waveform_name>
*RST Value	SINusoid
Examples	FUNC:TRIG SIN FUNC:TRIG TABLE1
Query Syntax	[SOURce:]FUNCtion[:SHAPe]:TRIGgered?
Returned Parameters	<CRD>
Related Commands	FUNC FUNC:MODEVOLT

FUNCtion:CSINusoid

This command sets the clipping level when a clipped sine output waveform is selected. The clipping characteristics can be specified in two ways:

- The clipping level is expressed as a percentage of the peak amplitude at which clipping occurs. The range is 0 to 100 percent. These are the default units when the optional THD suffix is not sent.
- The clipping level is expressed at the percentage of total harmonic distortion in the output voltage. The range is 0 to 43 percent. The optional THD suffix is sent to program in these units.

Command Syntax	[SOURce:]FUNCtion[:SHAPe]:CSINusoid<NRf>[THD]
Parameters	0 to 100% | 0 to 43% THD
*RST Value	100% | 0% THD (no clipping)
Examples	FUNC:CSIN 80 FUNC:CSIN 10 THD
Query Syntax	[SOURce:]FUNCtion[:SHAPe]:CSINusoid?
Returned Parameters	<NR3>
Related Commands	FUNC:MODE

4.18 Source Subsystem - List

This subsystem controls the generation of complex sequences of output changes with rapid, precise timing and synchronized with internal or external signals. Each subsystem command for which lists can be generated has an associated list of values that specify the output at each list step. LIST:COUNt determines how many times the AC source sequences through a list before that list is completed. LIST:DWELl specifies the time interval that each value (point) of a list is to remain in effect. LIST:STEP detemines if a trigger causes a list to advance only to its next point or to sequence through all of its points.

All active subsystems that have their modes set to LIST must have the same number of points (up to 100), or an error is generated when the first list point is triggered. The only exception is a list consisting of only one point. Such a list is treated as if it had the same number of points as the other lists, with all of the implied points having the same value as the one specified point. All list point data is stored in nonvolatile memory.

MODE commands such as VOLTage:MODE LIST are used to activate lists for specific functions (See . However, the LIST:DWELl command is active whenever any function is set to list mode. Therefore, LIST:DWELl must always be set either to one point, or to the same number of points as the active list.

Subsystem Syntax

```
[SOURce:]
    LIST
        :COUNt <n> | INFinity          Sets the list repeat count
        :DWELl <n>{,<n>}               Sets the list of dwell times
            :POINts?                   Returns the number of dwell list points
        :FREQuency
            [:LEVel] <n>{,<n>}         Sets the frequency list
                :POINts?               Returns the number of frequency points
            :SLEW <n>{,<n>}            Sets the frequency slew list
                :POINts?               Returns the number of frequency slew points
        :PHASe <n>{,<n>}               Sets the phase list
            :POINts?                   Returns the number of phase list points
        :SHAPe <shape>{,<shape>}       Sets the waveform shape list
            :POINts?                   Returns the number of shape list points
        :STEP ONCE | AUTO              Defines whether list is dwell- or trigger-paced
        :TTLTrg <bool>{,<bool>}        Defines the output marker list
            :POINts?                   Returns the number of output marker list points
        :VOLTage
            [:LEVel] <n>{,<n>}         Sets the voltage list
                :POINts?               Returns the number of voltage level points
            :SLEW <n>{,<n>}            Sets the voltage slew list
                :POINts?               Returns the number of voltage slew points
```

LIST:COUNt

This command sets the number of times that the list is executed before it is completed. The command accepts parameters in the range 1 through 2E8. Use MAX to set the list to maximum.

Command Syntax	[SOURce:]LIST:COUNt<NRf+> | MAX
Parameters	1 to 2E8 | MINimum | MAXimum
*RST Value	1
Examples	LIST:COUN 3 LIST:COUN INF
Query Syntax	[SOURce:]LIST:COUNt?
Returned Parameters	<NR3>
Related Commands	LIST:CURRLIST:FREQ LIST:TTLTLIST:VOLT

LIST:DWELl

This command sets the sequence of list dwell times. Each value represents the time in seconds that the output will remain at the particular list step point before completing the step. At the end of the dwell time, the output of the AC source depends upon the following conditions:

- If LIST:STEP AUTO has been programmed, the output automatically changes to the next point in the list.
- If LIST:STEP ONCE has been programmed, the output remains at the present level until a trigger sequences the next point in the list.

The order in which the points are entered determines the sequence in which they are output when a list is triggered. Changing list data while a subsystem is in list mode generates an implied ABORt.

Command Syntax	[SOURce:]LIST:DWELl<NRf+>{,<NRf+>}
Parameters	3-phase mode: 0 to 1.07533E6|MINimum|MAXimum 1-phase mode: 0 to 4.30133E5|MINimum|MAXimum
Unit	S (seconds)
Examples	LIST:DWEL .5,.5,1.5
Query Syntax	[SOURce:]LIST:DWEL?
Returned Parameters	<NR3>
Related Commands	LIST:FREQ LIST:TTLT LIST:VOLT

LIST:DWELl:POINts?

This query returns the number of points specified in LIST:DWELl. Note that it returns only the total number of points, not the point values.

Query Syntax	[SOURce:]LIST:DWELl:POINts?
Returned Parameters	<NR1>
Example	LIST:DWEL:POIN?
Related Commands	LIST:DWEL

LIST:FREQuency

This command sets the sequence of frequency list points. The frequency points are given in the command parameters, which are separated by commas.

The order in which the points are entered determines the sequence in which they are output when a list is triggered. Changing list data while a subsystem is in list mode generates an implied ABORt.

Command Syntax	[SOURce:]LIST:FREQuency[:LEVel]<NRf+>{,<NRf+>}
Parameters	45 to 5000
Unit	HZ (Hertz)
Examples	LIST:FREQ 60,65,70
Query Syntax	[SOURce:]LIST:FREQ?
Returned Parameters	<NR3>
Related Commands	LIST:FREQ:POIN? LIST:COUN LIST:DWEL LIST:STEP LIST:FREQ:SLEW

LIST:FREQuency:POINts?

This query returns the number of points specified in LIST:FREQuency. Note that it returns only the total number of points, not the point values.

Query Syntax	[SOURce:]LIST:FREQ[:LEVel]:POINts?
Returned Parameters	<NR1>
Example	LIST:FREQ:POIN?
Related Commands	LIST:FREQ

LIST:FREQuency:SLEW

This command sets the sequence of frequency slew list points. The frequency points are given in the command parameters, which are separated by commas. The order in which the points are entered determines the sequence in which they are output when a list is triggered. Changing list data while a subsystem is in list mode generates an implied ABORt.

Command Syntax	[SOURce:]LIST:FREQuency:SLEW<NRf+>{,<NRf+>}
Parameters	0 to 9.9E31 | INFinity
Unit	HZ (Hertz) per second
Examples	LIST:FREQ:SLEW 10, 1E2, INF
Query Syntax	[SOURce:]LIST:FREQ:SLEW?
Returned Parameters	<NR3>
Related Commands	LIST:FREQ:SLEW:POIN? LIST:COUN LIST:DWEL LIST:STEP LIST:FREQ

LIST:FREQuency:SLEW:POINts?

This query returns the number of points specified in LIST:FREQuency:SLEW. Note that it returns only the total number of points, not the point values.

Query Syntax	[SOURce:]LIST:FREQ:SLEW:POINts?
Returned Parameters	<NR1>
Example	LIST:FREQ:SLEW:POIN?
Related Commands	LIST:FREQ:SLEW

LIST:PHASe

Phase Selectable

This phase selectable command sets the sequence of phase list points. The phase points are given in the command parameters, which are separated by commas. The order in which the points are entered determines the sequence in which they are output when a list is triggered. Changing list data while a subsystem is in list mode generates an implied ABORt.

Command Syntax	[SOURce:]LIST:PHASe<NRf+>{,<NRf+>}
Parameters	360 through +360
Examples	LIST:PHAS 90,120,135
Query Syntax	[SOURce:]LIST:PHAS?
Returned Parameters	<NR3>
Related Commands	LIST:PHAS:POIN? LIST:COUN LIST:DWEL LIST:STEP

LIST:PHASe:POINts?

This query returns the number of points specified in LIST:PHASe. Note that it returns only the total number of points, not the point values.

Query Syntax	SOURce:]LIST:PHASe:POINts?
Returned Parameters	NR3>
Example	IST:PHAS:POIN?
Related Commands	IST:FREQ LIST:DWEL

LIST:SHAPe

This command sets the sequence of the waveform shape entries. The order in which the shapes are given determines the sequence in which the list of shape will be output when a list transient is triggered. Changing list data while a subsystem is in list mode generates an implied ABORt. The following shapes may be specified:

SINusoid	A sinewave is output
SQUare	A squarewave is output
CSINusoid	The output is a clipped sine waveform. Both positive and negative peak amplitudes are clipped at a value determined by the SOURce:FUNCtion:SHAPe:CSINusoid setting.
<waveform_name>	The output shape is described by one of the user-defined waveform tables.

The maximum peak voltage that the AC source can output is 425 V peak. This includes any combination of voltage and function shape values. Therefore, the maximum value that can be programmed depends on the peak-to-rms ratio of the selected waveform. For a sinewave, the maximum voltage that can be programmed is 300 V rms.

Note: You cannot program a voltage that produces a higher volt-second on the output than a 300V rms sinewave.

Command Syntax	[SOURce:]LIST:SHAPe<shape>{,<shape>}
Parameters	SINusoid|SQUare|CSINusoid|<waveform_name>
Examples	LIST:SHAP
Query Syntax	[SOURce:]LIST:SHAP?
Returned Parameters	<CRD>
Related Commands	LIST:SHAP:POIN? LIST:COUN LIST:DWEL LIST:STEP LIST:VOLT

LIST:SHAPe:POINts?

This query returns the number of points specified in LIST:SHAP. Note that it returns only the total number of points, not the point values.

Query Syntax	[SOURce:]LIST:SHAPe:POINts?
Returned Parameters	<NR1>
Example	LIST:SHAP:POIN?
Related Commands	LIST:SHAP

LIST:STEP

This command specifies how the list sequencing responds to triggers.

ONCE causes the list to advance only one point after each trigger. Triggers that arrive during a dwell delay are ignored.

AUTO causes the entire list to be output sequentially after the starting trigger, paced by its dwell delays. As each dwell delay elapses, the next point is immediately output.

Command Syntax	[SOURce:]LIST:STEP<step>
Parameters	ONCE | AUTO
*RST Value	AUTO
Examples	LIST:STEP ONCE
Query Syntax	[SOURce:]LIST:STEP?
Returned Parameters	<CRD>
Related Commands	LIST:COUN LIST:DWEL

LIST:TTLTrg

This command sets the sequence of Trigger Out list points. Each point which is set ON will cause a pulse to be output at Trigger Out when that list step is reached. Those entries which are set OFF will not generate Trigger Out pulses. The order in which the list points are given determines the sequence in which Trigger Out pulses will be output when a list transient is triggered. Changing list data while a subsystem is in list mode generates an implied ABORt.

Command Syntax	[SOURce:]LIST:TTLTrg<bool>{,<bool>}
Parameters	0 | 1 | OFF | ON
Examples	LIST:TTLT 1,0,1 LIST:TTLT ON,OFF,ON
Query Syntax	LIST:TTLT?
Returned Parameters	0 | 1
Related Commands	LIST:TTLT:POIN? LIST:COUN LIST:DWEL LIST:STEP OUTP:TTLT:STAT OUTP:TTLT:SOUR

LIST:TTLTrg:POINts?

This query returns the number of points specified in LIST:TTLT. Note that it returns only the total number of points, not the point values.

Query Syntax	[SOURce:]LIST:TTLTrg:POINts?
Returned Parameters	<NR1>
Example	LIST:TTLT:POIN?
Related Commands	LIST:TTLT

LIST:VOLTage

This command specifies the output voltage points in a list. The voltage points are given in the command parameters, which are separated by commas. The order in which the points are entered determines the sequence in which the list will be output when a list transient is triggered. Changing list data while a subsystem is in list mode generates an implied ABORt.

The maximum peak voltage that the AC source can output is 425 V peak. This includes any combination of voltage, voltage offset, and function shape values. Therefore, the maximum value that can be programmed depends on the peak-to-rms ratio of the selected waveform. For a sinewave, the maximum voltage that can be programmed is 300 V rms.

Note: You cannot program a voltage that produces a higher volt-second on the output than a 300V rms sinewave.

Command Syntax	[SOURce:]LIST:VOLTage[:LEVel] <NRf+>{,<NRf+>}
Parameters	0 to 300 (for sinewaves)
Unit	V (rms voltage)
Examples	LIST:VOLT 2.0,2.5,3.0 LIST:VOLT MAX,2.5,MIN
Query Syntax	[SOURce:]LIST:VOLTage[:LEVel]?
Returned Parameters	<NR3>
Related Commands	LIST:VOLT:POIN? LIST:COUN LIST:DWEL LIST:STEP LIST:SHAP LIST:VOLT:OFFS

LIST:VOLTage:POINts?

This query returns the number of points specified in LIST:VOLT. Note that it returns only the total number of points, not the point values.

Query Syntax	[SOURce:]LIST:VOLTage:POINts?
Returned Parameters	<NR1>
Example	LIST:VOLT:POIN?
Related Commands	LIST:VOLT

LIST:VOLTage:SLEW

This command specifies the output offset slew points in a list. The slew points are given in the command parameters, which are separated by commas. The order in which the points are entered determines the sequence in which the list will be output when a list transient is triggered. Changing list data while a subsystem is in list mode generates an implied ABORt.

Command Syntax	[SOURce:]LIST:VOLTage:SLEW <NRf+>{,<NRf+>}
Parameters	1E-4 to 9.9E37 | INFinity | MINimum | MAXimum
Unit	V/S (volts per second)
Example	LIST:VOLT:SLEW 10, 1E2, INF
Query Syntax	[SOURce:]LIST:VOLTage:SLEW?
Returned Parameters	<NR3>
Related Commands	LIST:VOLT:SLEW:POIN? LIST:COUN LIST:DWEL LIST:STEP

LIST:VOLTage:SLEW:POINts?

This query returns the number of points specified in LIST:VOLTage:SLEW. Note that it returns only the total number of points, not the point values.

Query Syntax	[SOURce:]LIST:VOLTage:SLEW:POINts?
Returned Parameters	<NR1>
Example	LIST:VOLT:SLEW:POIN? LIST:VOLT:SLEW:POIN? MAX
Related Commands	LIST:VOLT:SLEW

4.19 Source Subsystem - Phase

This subsystem programs the output phases of the AC source. When phase commands are used to program single-phase units, the only discernible effect in using the phase commands is to cause an instantaneous shift in the output waveform phase.

Subsystem Syntax

```
[SOURce:]
    PHASe
        [:IMMediate] <n>        Sets the output phase
        :MODE <mode>            Sets the phase mode (FIX|STEP|PULS|LIST)
        :TRIGgered <n>          Sets the triggered phase (step or pulse mode only)
```

PHASe

Phase Selectable

This commands sets the phase of the output voltage waveform relative to an internal reference. The phase angle is programmed in degrees. Positive phase angles are used to program the leading phase, and negative phase angles are used to program the lagging phase.

The PHASe command is not influenced by INSTrument:COUPle ALL. It applies only to the current output phase selected by INSTrument:NSELect.

Command Syntax	[SOURce:]PHASe[IMMediate]<NRf+>
Parameters	-360º through +360º
*RST Value	phase ø1 = 0°, phase ø2 = 240°, phase ø3 = 120°
Examples	PHAS 45 PHASE MAX
Query Syntax	[SOURce:]PHASe?
Returned Parameters	<NR3>
Related Commands	PHAS:MODE PHAS:TRIG

PHASe:MODE

Phase Selectable

This command determines how the output phase is controlled during a triggered output transient. The choices are:

FIXed	The output phase is unaffected by a triggered output transient.
STEP	The output phase is programmed to the value set by PHASe:TRIGgered when a triggered transient occurs.
PULSe	The output phase is changed to the value set by PHASe:TRIGgered for a duration determined by the pulse commands.
LIST	The waveform shape is controlled by the phase list when a triggered transient occurs.

Command Syntax	[SOURce:]PHASe:MODE<mode>
Parameters	FIXed | STEP | PULSe | LIST
*RST Value	FIX
Examples	PHAS:MODE LIST PHAS:MODE FIX
Query Syntax	[SOURce:]PHASe:MODE?
Returned Parameters	<CRD>
Related Commands	PHAS:TRIG PHAS

PHASe:TRIGgered

Phase Selectable

This command sets the output phase when a triggered step or pulse transient occurs. The phase of the output voltage waveform is expressed relative to an internal reference. The phase angle is programmed in degrees. Positive phase angles are used to program the leading phase, and negative phase angles are used to program the lagging phase.

The PHASe command is not influenced by INSTrument:COUPle ALL. It applies only to the current output phase selected by INSTrument:NSELect.

Command Syntax	[SOURce:]PHASe:TRIGgered<NRf+>
Parameters	-360° through +360°
*RST Value	triggered phase ø1 = 0°, triggered phase ø2 = 120°, triggered phase ø3 = 240°
Examples	PHAS:TRIG 120 PHASE MAX
Query Syntax	[SOURce:]PHASe:TRIGgered?
Returned Parameters	<NR3>
Related Commands	PHAS:MODE PHAS

4.20 Source Subsystem - Pulse

This subsystem controls the generation of output pulses. The PULSe:DCYCle, PULSe:HOLD, PULSe:PERiod, and PULSe:WIDTh commands are coupled, which means that the values programmed by any one of these commands can be affected by the settings of the others. Refer to the tables under PULSe:HOLD for an explanation of how these commands affect each other.

Subsystem Syntax

```
[SOURce:]
    PULSe
        :COUNt <n> | INFinity        Selects transient pulse count
        :DCYCle <n>                  Selects pulse duty cycle
        :HOLD WIDTh |DCYCle          Selects parameter that is held constant
        :PERiod <n>                  Selects pulse period when the count is greater than 1
        :WIDTh <n>                   Selects width of the pulses
```

PULSe:COUNt

This command sets the number of pulses that are output when a triggered output transient occurs. The command accepts parameters in the range 1 through 2E8. If INFinity or MAXimum is sent, the output pulse repeats indefinitely.

Command Syntax	[SOURce:]PULSe:COUNt<NRf+> | INFinity
Parameters	1 to 2E8 | MINimum | MAXimum | INFinity
*RST Value	1
Examples	PULS:COUN 3 PULS:COUN MIN PULS:COUN INF
Query Syntax	[SOURce:]PULS:COUNt?
Returned Parameters	<NR3>
Related Commands	PULS:DCYC PULS:HOLD PULS:PER PULS:WIDT

PULSe:DCYCle

This command sets the duty cycle of the triggered output pulse. The duty cycle units are specified in percent.

Command Syntax	[SOURce:]PULSe:DCYCle<NRf+>
Parameters	0 to 100%|MINimum|MAXimum
*RST Value	50%
Examples	PULS:DCYC 75 PULS:DCYC MAX
Query Syntax	[SOURce:]PULSe:DCYCle?
Returned Parameters	<NR3>
Related Commands	PULS:COUN PULS:HOLD PULS:PER PULS:WIDT

PULSe:HOLD

This command specifies whether the pulse width or the duty cycle is to be held constant when the pulse period changes. The following tables describe how the duty cycle, period, and width are affected when one, two, or all three parameters are set in a single program message.

Command Syntax	[SOURce:]PULSe:HOLD<parameter>
Parameters	WIDTh|DCYCle
*RST Value	WIDTh
Examples	PULS:HOLD DCYC
Query Syntax	[SOURce:]PULSe:HOLD?
Returned Parameters	<CRD>
Related Commands	PULS:COUN PULS:DCYC PULS:PER PULS:WIDT

Parameter Set			Action
DCYCle	PERiod	WIDTh	
		√	Sets WIDTh. If WIDTh < PERiod, recalculates DCYCle; otherwise, recalculates the PERiod and DCYCle.
	√		Sets PERiod. If WIDTh < PERiod, recalculates DCYCle; otherwise, recalculates the PERiod and DCYCle.
	√	√	Sets WIDTh. If WIDTh < PERiod, sets the PERiod and recalculates DCYCle; otherwise, recalculates the PERiod and DCYCle
√			Sets DCYCle and recalculates PERiod
√		√	Sets DCYCle and WIDTh and recalculates PERiod
√	√		Sets DCYCle and PERiod and recalculates WIDTh
√	√	√	Sets WIDTh. If WIDTh < PERiod, sets the PERiod and recalculates DCYCle; otherwise, recalculates the PERiod and DCYCle

Table 4-1: PULSe:HOLD = WIDTh parameters

Parameter Set			Action
DCYCle	PERiod	WIDTh	
		√	Sets WIDTh and recalculates the PERiod
	√		Sets PERiod and recalculates the WIDTh
	√	√	Sets WIDTh. If WIDTh < PERiod, sets the PERiod and recalculates DCYCle; otherwise, recalculates the PERiod and DCYCle
√			Sets DCYCle and recalculates PERiod
√		√	Sets DCYCle and WIDTh and recalculates PERiod
√	√		Sets DCYCle and PERiod and recalculates WIDTh
√	√	√	Sets WIDTh. If WIDTh < PERiod, sets the PERiod and recalculates DCYCle; otherwise, recalculates the PERiod and DCYCle

Table 4-2: PULSe:HOLD = DCYCle parameters

PULSe:PERiod

This command sets the period of a triggered output transient The command parameters are model-dependent.

Command Syntax	[SOURce:]PULSe:PERiod<NRf+>
Parameters	3-phase models: 0 to 1.07533E6 | MINimum | MAXimum 1-phase models: 0 to 4.30133E5 | MINimum | MAXimum
Unit	s (seconds)
*RST Value	0.03333
Examples	PER 0.001 PER MIN
Query Syntax	[SOURce:]PERiod?
Returned Parameters	<NR3>
Related Commands	PULS:COUN PULS:DCYC PULS:HOLD PULS:WIDT

PULSe:WIDTh

This command sets the width of a transient output pulse. The command parameters are model-dependent.

Command Syntax	[SOURce:]PULSe:WIDTh<NRf+>
Parameters	3-phase models: 0 to 1.07533E6 | MINimum | MAXimum 1-phase models: 0 to 4.30133E5 | MINimum | MAXimum
Unit	s (seconds)
*RST Value	0.01667 (equals the period of a single 60 Hz cycle)
Examples	PULS:WIDT 0.001 PULS:WIDT MIN
Query Syntax	[SOURce:]PULSe:WIDTh?
Returned Parameters	<NR3>
Related Commands	PULS:COUN PULS:DCYC PULS:HOLD PULS:PER

4.21 Source Subsystem - Voltage

This subsystem programs the output voltage of the Lx/Ls Series AC source.

Subsystem Syntax

```
[SOURce:]
    VOLTage
        :ALC
            [:STATe]  ON | OFF | REG          Sets Auto Level Control to on (trip), off, or regulation
            :SOURce INTernal | EXTernal       Sets voltage sense source
        [:LEVel]
            [:IMMediate]
                [:AMPLitude] <n>              Sets the ac rms voltage amplitude
            :TRIGgered
                [:AMPLitude] <n>              Sets the transient voltage amplitude
        :MODE <mode>                          Sets the voltage mode (FIX|STEP|PULS|LIST)
        :PROTection
            [:LEVel] <n>                      Sets the overvoltage protection threshold
            :STATe <bool>                     Sets the overvoltage protection state
        :RANGe <n>                            Sets the voltage range
        :SENSe
            [:SOURce] INTernal | EXTernal     Sets voltage sense source
        :SLEW
            [:IMMediate] <n> | INFinity       Sets the voltage slew rate
            :MODE <mode>                      Sets voltage slew mode (FIX|STEP|PULS|LIST)
            :TRIGgered <n> | INFinity         Sets the transient voltage slew rate
```

VOLTage:ALC[:STATe]

These commands select the various auto level control (ALC) modes. The ALC mode uses the voltage measurement feedback to more precisely regulate the output voltage. The following ALC modes can be selected:

ON | 0	This enables the ALC trip mode. If the programmed voltage cannot be maintained, the output is disabled (relay opens) and a 801 Voltage error is generated.
OFF | 1	This disables the ALC mode.
REG | 2	This enables the ALC regulation mode. The output voltage is regulated based on the readback voltage but if regulation cannot be maintained, the output does not trip off. Instead, a status bit is set in the Event Status register to indicate the AC source is out of regulation. (This mode requires firmware revision 0.98 or higher).

Note that the command format will take either alphanumeric or integer data but the query form always returns numeric data (NR1).

Command Syntax	[SOURce:]VOLTage:ALC[:STATe] <source>
Parameters	ON | OFF | REG | 0 | 1 | 2
*RST Value	REG
Examples	VOLT:ALC ON
Query Syntax	[SOURce:]VOLTage:ALC?
Returned Parameters	<NR1>
Related Commands	VOLT

VOLTage:ALC:SOURce

These commands select the source from which the output voltage is sensed. The following voltage sense sources can be selected:

INTernal	This senses the voltage at the output of the power amplifier on the inboard side of the output disconnect relay.
EXTernal	This senses the output voltage at the user's sense terminals, which allows remote voltage sensing at the load.

Command Syntax	[SOURce:]VOLTage:ALC:SOURce<source>
Parameters	INTernal | EXTernal
*RST Value	INTernal
Examples	VOLT:ALC:SOUR EXT
Query Syntax	[SOURce:]VOLTage:ALC:SOURce?
Returned Parameters	<CRD>
Related Commands	VOLT:SENS:DET

Note: The VOLT:ALC:SOUR command is an alias for the VOLT:SENS:SOUR command. Both perform the same function. This is done for backward compatability with the Agilent 6834B.

VOLTage

Phase Selectable

This command programs the ac rms output voltage level of the AC source. The maximum peak voltage that the AC source can output is 425 V peak. This includes any combination of voltage and function shape values. Therefore, the maximum value that can be programmed depends on the peak-to-rms ratio of the selected waveform. For a sinewave, the maximum voltage that can be programmed is 300 V rms.

Note: You cannot program a voltage that produces a higher volt-second on the output than a 300V rms sinewave.

Command Syntax	[SOURce:]VOLTage[:LEVel][:IMMediate][:AMPLitude]<NRf+>
Parameters	0 to 300 (for sinewaves)
Unit	V (rms voltage)
*RST Value	1 volt
Examples	VOLT 250 VOLT:LEV 25
Query Syntax	[SOURce:]VOLTage[:LEVel] [:IMMediate][:AMPLitude]?
Returned Parameters	<NR3>
Related Commands	VOLT:MODE VOLT:TRIG FUNC:SHAP

VOLTage:TRIGgered

Phase Selectable

This command selects the ac rms amplitude that the output waveform will be set to during a triggered step or pulse transient.

The maximum peak voltage that the AC source can output is 425 V peak. This includes any combination of voltage, and function shape values. Therefore, the maximum value that can be programmed depends on the peak-to-rms ratio of the selected waveform. For a sinewave, the maximum voltage that can be programmed is 300 V rms.

Note: You cannot program a voltage that produces a higher volt-second on the output than a 300V rms sinewave.

Command Syntax	[SOURce:]VOLTage[:LEVel]:TRIGgered :AMPLitude]<NRf+>
Parameters	0 to 300 (for sinewaves)
Unit	V (rms voltage)
*RST Value	0 volt
Examples	VOLT:TRIG 120 VOLT:LEV:TRIG 120
Query Syntax	SOURce:]VOLTage[:LEVel]:TRIGgered:AMPLitude]?
Returned Parameters	<NR3> If the TRIG level is not programmed, the IMM level is returned.
Related Commands	VOLT VOLT:MODE FUNC:SHAP

VOLTage:MODE

Phase Selectable

This command determines how the ac rms output voltage is controlled during a triggered output transient. The choices are:

FIXed	The voltage is unaffected by a triggered output transient.
STEP	The voltage is programmed to the value set by VOLTage:TRIGgered when a triggered transient occurs.
PULSe	The voltage is changed to the value set by VOLTage:TRIGgered for a duration determined by the pulse commands.
LIST	The voltage is controlled by the voltage list when a triggered transient occurs.

Command Syntax	[SOURce:]VOLTage:MODE<mode>
Parameters	FIXed | STEP | PULSe | LIST
*RST Value	FIX
Examples	VOLT:MODE LIST VOLT:MODE FIX
Query Syntax	[SOURce:]VOLTage:MODE?
Returned Parameters	<CRD>
Related Commands	VOLT:TRG VOLT

VOLTage:PROTection

Phase Selectable

This command sets the overvoltage protection (OVP) level of the AC source. If the peak output voltage exceeds the OVP level, then the AC source output is disabled and the Questionable Condition status register OV bit is set (see Section 7 under Programming the Status and Event Registers). An overvoltage condition can be cleared with the OUTPut:PROTection:CLEar command after the condition that caused the OVP trip is removed. The OVP always trips with zero delay and is unaffected by the OUTPut:PROTection:DELay command.

Command Syntax	[SOURce:]VOLTage:PROTection[:LEVel]<NRf+>
Parameters	0 to 500
Unit	V (peak voltage)
*RST Value	MAX
Examples	VOLT:PROT 400 VOLT:PROT:LEV MAX
Query Syntax	[SOURce:]VOLTage:PROTection[:LEVel]?
Returned Parameters	<NR3>
Related Commands	OUTP:PROT:CLE

VOLTage:RANGe

Phase Selectable

This command sets the voltage range of the AC source. Two voltage ranges are available: a 150 volt range and a 300 volt range. Sending a parameter greater than 150 selects the 300 volt range, otherwise the 150 volt range is selected.

When the range is set to 150, the maximum rms voltage that can be programmed for a sine wave is 150 volts. For other waveshapes, the maximum programmable voltage may be different, depending on the waveform crest factor.

The VOLTage:RANGe command is coupled with the CURRent command. This means that the maximum current limit that can be programmed at a given time depends on the voltage range setting in which the unit is presently operating. Refer to chapter 4 under "Coupled Commands" for more information.

Command Syntax	[SOURce:]VOLTage:RANGe<NRf+>
Parameters	150 | 300
*RST Value	MAX
Examples	VOLT:RANG 150 VOLT:RANG MIN
Query Syntax	[SOURce:]VOLTage:RANGe?
Returned Parameters	<NR3>
Related Commands	VOLT

VOLTage:SENSe:SOURce

These commands select the source from which the output voltage is sensed. The following voltage sense sources can be selected:

INTernal	This senses the voltage at the output of the power amplifier on the inboard side of the output disconnect relay.
EXTernal	This senses the output voltage at the user's sense terminals, which allows remote voltage sensing at the load.

Command Syntax	[SOURce:]VOLTage:SENSe:SOURce<source> [SOURce:]VOLTage:ALC:SOURce<source>
Parameters	INTernal | EXTernal
*RST Value	INTernal
Examples	VOLT:SENS:SOUR INT
Query Syntax	[SOURce:]VOLTage:SENSe:SOURce?
Returned Parameters	<CRD>
Related Commands	VOLT:ALC:SOUR EXT

Note: The VOLT:ALC:SOUR command is an alias for the VOLT:SENS:SOUR command. Both perform the same function. This is done for backward compatability with the Agilent 6834B.

VOLTage:SLEW

This command sets the slew rate for all programmed changes in the ac rms output voltage level of the AC source. A parameter of MAXimum or INFinity will set the slew to its maximum possible rate. The SCPI representation for INFinity is 9.9E37. This command does not affect the rate at which programmed dc offset changes occur.

Command Syntax	[SOURce:]VOLTage:SLEW[:IMMediate]<NRf+>|INFinity
Parameters	1E-3 to 9.9E37 | INFinity |MINimum | MAXimum
Unit	V/S (volts per second)
*RST Value	INFinity
Examples	VOLT:SLEW 1 VOLT:SLEW MAX VOLT:SLEW INF
Query Syntax	[SOURce:]VOLTage:SLEW[:IMMediate]?
Returned Parameters	<NR3>
Related Commands	VOLT:SLEW:MODE VOLT:SLEW:TRIG

VOLTage:SLEW:MODE

Phase Selectable

This command determines how the output voltage slew rate is controlled during a triggered output transient. The choices are:

FIXed	The slew rate is unaffected by a triggered output transient.
STEP	The slew rate is programmed to the value set by VOLTage:SLEW:TRIGgered when a triggered transient occurs.
PULSe	The slew rate is changed to the value set by VOLTage:SLEW:TRIGgered for a duration determined by the pulse commands.
LIST	The slew rate is controlled by the voltage slew list when a triggered transient occurs.

Command Syntax	[SOURce:]VOLTage:SLEW:MODE<mode>
Parameters	FIXed | STEP | PULSe | LIST
*RST Value	FIX
Examples	VOLT:SLEW:MODE LIST VOLT:SLEW:MODE FIX
Query Syntax	[SOURce:]VOLTage:SLEW:MODE?
Returned Parameters	<CRD>
Related Commands	VOLT:SLEW:TRG VOLT:SLEW

VOLTage:SLEW:TRIGgered

Phase Selectable

This command selects the slew rate that will be set during a triggered step or pulse transient. A parameter of MAXimum or INFinity will set the slew to its maximum possible rate. The SCPI representation for infinity is 9.9E37.

Command Syntax	[SOURce:]VOLTage:SLEW:TRIGgered<NRf+>|INFinity
Parameters	1E-3 to 9.9E37 | INFinity |MINimum | MAXimum
Unit	V/S (volts per second)
*RST Value	INFinity
Examples	VOLT:SLEW:TRIG 1 VOLT:SLEW:TRIG MAX VOLT:SLEW:TRIG INF
Query Syntax	[SOURce:]VOLTage:SLEW:TRIGgered?
Returned Parameters	<NR3>
Related Commands	VOLT:SLEW:MODE VOLT:SLEW

4.22 Status Subsystem Commands

This subsystem programs the Lx\Ls Series status registers. There are four groups of status registers; **Operation**, **Questionable**, **Questionable Instrument ISummary** and **Standard Event**. The Standard Event group is programmed with Common commands. The Operation, Questionable, and Instrument ISummary status groups each consist of the following five registers:

Condition	Enable	Event	NTR Filter	PTR Filter

Refer to Chapter 7 for more information about the status registers.

Subsystem Syntax

```
STATus
    :PRESet                          Presets all enable and transition registers to power-on
    :OPERation
        [:EVENt]                     Returns the value of the event register
        :CONDition                   Returns the value of the condition register
        :ENABle <n>                  Enables specific bits in the Event register
        :NTRansition<n>              Sets the Negative transition filter
        :PTRansition<n>              Sets the Positive transition filter
    :QUEStionable
        [:EVENt]                     Returns the value of the event register
        :CONDition                   Returns the value of the condition register
        :ENABle <n>                  Enables specific bits in the Event register
        :NTRansition<n>              Sets the Negative transition filter
        :PTRansition<n>              Sets the Positive transition filter
        :INSTrument
            :ISUMmary
                [:EVENt]             Returns the selected phase's event register value
                :CONDition           Returns the selected phase's condition register value
                :ENABle <n>          Enables specific bits in the selected phase's Event
                                     register
                :NTRansition<n>      Sets the selected phase's Negative transition filter
                :PTRansition<n>      Sets the selected Phase's Positive transition filter
```

STATus:PRESet

This command sets the Enable, PTR, and NTR registers of the status groups to their power-on values. These values are:

Enable Registers: all bits set to 0 (OFF)

PTR Registers: all defined bits set to 1 (ON)

NTR Registers: all bits set to 0 (OFF)

Command Syntax	STATus:PRESet
Parameters	None
Examples	STAT:PRES

Bit Position	**15-9**	**8**	**7-6**	**5**	**4-1**	**0**
Bit Name	not used	CV	not used	WTG	not used	CAL
Bit Weight		256		32		1
CAL Interface is computing new calibration constants						

Bit Position	15-9	8	7-6	5	4-1	0
WTG Interface is waiting for a trigger.						
CV Output voltage is regulated.						

Table 4-3: Bit Configuration of Status Operation Registers

STATus:OPERation?

This query returns the value of the Operation Event register. The Event register is a read-only register which holds (latches) all events that are passed by the Operation NTR and/or PTR filter. Reading the Operation Event register clears it.

Query Syntax	STATus:OPERation[:EVENt]?
Parameters	None
Returned Parameters	<NR1>(Register Value)
Examples	STAT:OPER:EVEN?
Related Commands	*CLS STAT:OPER:NTR STAT:OPER:PTR

STATus:OPERation:CONDition?

This query returns the value of the Operation Condition register. This is a read-only register which holds the real-time (unlatched) operational status of the Lx\Ls Series.

Query Syntax	STATus:OPERation:CONDition?
Parameters	None
Examples	STAT:OPER:COND?
Returned Parameters	<NR1>(Register value)

STATus:OPERation:ENABle

This command and its query set and read the value of the Operation Enable register. This register is a mask for enabling specific bits from the Operation Event register to set the operation summary bit (OPER) of the Status Byte register. The operation summary bit is the logical OR of all enabled Operation Event register bits.

Command Syntax	STATus:OPERation:ENABle <NRf+>
Parameters	0 to 32727
Default Value	0
Examples	STAT:OPER:ENAB 32
	STAT:OPER:ENAB 1
Query Syntax	STATus:OPERation:ENABle?
Returned Parameters	<NR1>(Register value)
Related Commands	STAT:OPER:EVEN

STATus:OPERation:NTR STATus:OPERation:PTR

These commands set or read the value of the Operation NTR (Negative-Transition) and PTR (Positive-Transition) registers. These registers serve as polarity filters between the Operation Enable and Operation Event registers to cause the following actions:

- When a bit in the Operation NTR register is set to 1, then a 1-to-0 transition of the corresponding bit in the Operation Condition register causes that bit in the Operation Event register to be set.
- When a bit of the Operation PTR register is set to 1, then a 0-to-1 transition of the corresponding bit in the Operation Condition register causes that bit in the Operation Event register to be set.

- If the same bits in both NTR and PTR registers are set to 1, then any transition of that bit at the Operation Condition register sets the corresponding bit in the Operation Event register.
- If the same bits in both NTR and PTR registers are set to 0, then no transition of that bit at the Operation Condition register can set the corresponding bit in the Operation Event register.

Note: Setting a bit in the PTR or NTR filter can of itself generate positive or negative events in the corresponding Operation Event register.

Command Syntax	STATus:OPERation:NTRansition<NRf+> STATus:OPERation:PTRansition<NRf+>
Parameters	0 to 32727
Default Value	0
Examples	STAT:OPER:NTR 32 STAT:OPER:PTR 1
Query Syntax	STATus:OPERation:NTR? STATus:OPERation:PTR?
Returned Parameters	<NR1>(Register value)
Related Commands	STAT:OPER:ENAB

Bit Position	**15**	**14**	**13**	**12**	**11**	**10**	**9**	**8-5**	**4**	**3**	**2**	**1**	**0**
Bit Name	not used	not used	Isum	CL rms	Rail	not used	RI	not used	TO	UNR	not used	OCP	OV
Bit Weight			8192	4096	2048		512		16	8		2	1

Table 4-4: Bit Configuration of Questionable Registers

OV	over-voltage protection has tripped
OCP	over-current protection has tripped
UNR	output is unregulated
TO	over-temperature protection has tripped
RI	remote inhibit is active
Rail	loss of input phase detected
CL rms	rms current limit is active
Isum	summary of Isum registers

STATus:QUEStionable?

This query returns the value of the Questionable Event register. The Event register is a read-only register which holds (latches) all events that are passed by the Questionable NTR and/or PTR filter. Reading the Questionable Event register clears it.

On the Lx\Ls Series, each signal that is fed into the Questionable Status Condition register is logically-ORed from three corresponding status signals that originate from each phase.

Query Syntax	STATus:QUEStionable[:EVENt]?
Parameters	None
Returned Parameters	<NR1>(Register Value)
Examples	STAT:QUES:EVEN?
Related Commands	*CLS STAT:QUES:NTR STAT:QUES:PTR

STATus:QUEStionable:CONDition?

This query returns the value of the Questionable Condition register. That is a read-only register, which holds the real-time (unlatched) questionable status of the AC source.

Query Syntax	STATus:QUEStionable:CONDition?
Example	STAT:QUES:COND?
Returned Parameters	<NR1>(Register value)

STATus:QUEStionable:ENABle

This command sets or reads the value of the Questionable Enable register. This register is a mask for enabling specific bits from the Questionable Event register to set the questionable summary (QUES) bit of the Status Byte register. This bit (bit 3) is the logical OR of all the Questionable Event register bits that are enabled by the Questionable Status Enable register.

Command Syntax	STATus:QUEStionable:ENABle <NRf+>
Parameters	0 to 32727
Default Value	0
Examples	STAT:QUES:ENAB 18
Query Syntax	STATus:QUEStionable:ENABle?
Returned Parameters	<NR1>(Register value)
Related Commands	STAT:QUES:EVEN?

STATus:QUEStionable:NTR
STATus:QUEStionable:PTR

These commands allow the values of the Questionable NTR (Negative-Transition) and PTR (Positive-Transition) registers to be set or read. These registers serve as polarity filters between the Questionable Enable and Questionable Event registers to cause the following actions:

- When a bit of the Questionable NTR register is set to 1, then a 1-to-0 transition of the corresponding bit of the Questionable Condition register causes that bit in the Questionable Event register to be set.
- When a bit of the Questionable PTR register is set to 1, then a 0-to-1 transition of the corresponding bit in the Questionable Condition register causes that bit in the Questionable Event register to be set.
- If the same bits in both NTR and PTR registers are set to 1, then any transition of that bit at the Questionable Condition register sets the corresponding bit in the Questionable Event register.
- If the same bits in both NTR and PTR registers are set to 0, then no transition of that bit at the Questionable Condition register can set the corresponding bit in the Questionable Event register.

Note: Setting a bit in the PTR or NTR filter can of itself generate positive or negative events in the corresponding Questionable Event register.

Command Syntax	STATus:QUEStionable:NTRansition<NRf+> STATus:QUEStionable:PTRansition<NRf+>
Parameters	0 to 32727
Default Value	0
Examples	STAT:QUES:NTR 16 STAT:QUES:PTR 512
Query Syntax	STATus:QUEStionable:NTRansition? STATus:QUEStionable:PTRansitiion?
Returned Parameters	<NR1>(Register value)
Related Commands	STAT:QUES:ENAB

Bit Position	**15 13**	**12**	**11**	**10**	**9**	**8-5**	**4**	**3**	**2**	**1**	**0**
Bit Name	not used	CL rms	Rail	not used	RI	not used	TO	UNR	not used	OCP	OV
Bit Weight		4096	2048		512		16	8		2	1

Table 4-5: Bit Configuration of Questionable Instrument Summary Registers

OV = over-voltage protection has tripped

OCP = over-current protection has tripped

UNR = output is unregulated

TO = over-temperature protection has tripped

RI = remote inhibit is active

Rail = loss of input phase voltage detected

CL rms = rms current limit is active

STATus:QUEStionable:INSTrument:ISUMmary?

Phase Selectable

This command returns the value of the Questionable Event register for a specific output of a three-phase AC source. The particular output phase must first be selected by INST:NSEL.

The Event register is a read-only register which holds (latches) all events that are passed by the Questionable NTR and/or PTR filter. Reading the Questionable Event register clears it.

Query Syntax	STATus:QUEStionable:INSTrument:ISUMmary[:EVENt]?
Parameters	None
Returned Parameters	<NR1> (Register Value)
Examples	STAT:QUES:INST:ISUM:EVEN?
Related Commands	*CLS STAT:QUES:INST:ISUM:NTR STAT:QUES:INST:ISUM:PTR

STATus:QUEStionable:INSTrument:ISUMmary:CONDition?

Phase Selectable

This query returns the value of the Questionable Condition register for a specific output of a three-phase AC source. The particular output phase must first be selected by INST:NSEL.

The Condition register is a read-only register which holds the real-time (unlatched) questionable status of the Lx\Ls Series.

Query Syntax	STATus:QUEStionable:INSTrument:ISUMmary:CONDition?
Example	STAT:QUES:INST:ISUM:COND?
Returned Parameters	<NR1> (Register value)

STATus:QUEStionable:INSTrument:ISUMmary:ENABle

Phase Selectable

This command sets or reads the value of the Questionable Enable register for a specific output of a three-phase AC source. The particular output phase must first be selected by INST:NSEL.

The Enable register is a mask for enabling specific bits from the Questionable Event register to set the questionable summary (QUES) bit of the Status Byte register. This bit (bit 3) is the logical OR of all the Questionable Event register bits that are enabled by the Questionable Status Enable register.

Command Syntax	STATus:QUEStionable:INSTrument:ISUMmary:ENABle <NRf+>
Parameters	0 to 32767
Default Value	0
Examples	STAT:QUES:INST:ISUM:ENAB 18
Query Syntax	STATus:QUEStionable:INSTrument:ISUMmary:ENABle?
Returned Parameters	<NR1> (Register value)
Related Commands	STAT:QUES:INST:ISUM:EVEN?

STATus:QUEStionable:INSTrument:ISUMmary:NTR
STATus:QUEStionable:INSTrument:ISUMmary:PTR

These commands allow the values of the Questionable NTR (Negative-Transition) and PTR (Positive-Transition) registers to be set or read for a specific output of a three-phase AC source. The particular output phase must first be selected by INST:NSEL.

The NTR and PTR registers serve as polarity filters between the Questionable Enable and Questionable Event registers to cause the following actions:

- When a bit of the Questionable NTR register is set to 1, then a 1-to-0 transition of the corresponding bit of the Questionable Condition register causes that bit in the Questionable Event register to be set.
- When a bit of the Questionable PTR register is set to 1, then a 0-to-1 transition of the corresponding bit in the Questionable Condition register causes that bit in the Questionable Event register to be set.
- If the same bits in both NTR and PTR registers are set to 1, then any transition of that bit at the Questionable Condition register sets the corresponding bit in the Questionable Event register.
- If the same bits in both NTR and PTR registers are set to 0, then no transition of that bit at the Questionable Condition register can set the corresponding bit in the Questionable Event register.

Note: Setting a bit in the PTR or NTR filter can of itself generate positive or negative events in the corresponding Questionable Event register.

Command Syntax	STATus:QUEStionable:INSTrument:ISUMmary :NTRansition<NRf> STATus:QUEStionable:INSTrument:ISUMmary :PTRansition<NRf>
Parameters	0 to 32727
Default Value	0
Examples	STAT:QUES:INST:ISUM:NTR 16 STAT:QUES:INST:ISUM:PTR 512
Query Syntax	STATus:QUEStionable:INSTrument:ISUMmary:NTRansition? STATus:QUEStionable:INSTrument:ISUMmary:PTRansition?
Returned Parameters	<NR1> (Register value)
Related Commands	STAT:QUES:INST:ISUM:ENAB

4.23 System Commands

The system commands control the system-level functions of the Lx\Ls Series.

Subsystem Syntax

SYSTem	
:CONFiguration	Queries the source configuration data
:NOUTputs <n>	Selects the number of output phases
:ETIMe	Returns accumulated on time
:ERRor?	Returns the error number and error string
:LANGuage	Sets the programming language
:LOCal	Go to local mode (RS-232 only)
:REMote	Go to remote mode (RS-232 only)
:RWLock	Local Lock out (front panel LOCAL button) (RS-232 only)
:TEMPerature?	Returns temperature inside unit.
:VERSion?	Returns the SCPI version number

SYSTem:CONFiguration

This query format of this command returns the installed options and configuration settings of the power source. It is not possible to change the configuration as only the query form is supported.

Command Syntax	SYSTem:CONFigure?
Query Syntax	SYSTem:CONFigure?
Returned Parameters	<AARD>
Related Commands	*OPT?

SYSTem:CONFiguration:NOUTputs

This command selects the number of outputs phases for the AC source. This requires that the AC source is capable of switching between single and three-phase mode.

Note: Execution of this command disables all outputs, clears lists and *RCL states to the initialization default values, reconfigures current readback and programming calibration constants.

Once configured, the instrument behaves transparently as either a single-phase source or as a three phase source depending on the selected configuration.

Command Syntax	SYSTem:CONFigure:NOUTputs <n>
Parameters	1 or 3
Examples	SYSTem:CONFigure:NOUT 3
Query Syntax	SYSTem:CONFigure:NOUT?
Returned Parameters	<NR1>
Related Commands	CAL:CURR

SYSTem:ETIMe?

This command will return the total number of accumulated hours, minutes and seconds.

Command Syntax	SYSTem:ETIMe?
Parameters	none
Example	SYST:ETIM?
Returned Parameters	<NR1>,<NR1>,<NR1>

SYSTem:ERRor?

This query returns the next error number followed by its corresponding error message string from the remote programming error queue. The queue is a FIFO (first-in, first-out) buffer that stores errors as they occur. As it is read, each error is removed from the queue. When all errors have been read, the query returns 0, No Error. If more errors are accumulated than the queue can hold, the last error in the queue is -350, Too Many Errors.

Query Syntax	SYSTem:ERRor?
Parameters	None
Returned Parameters	<NR1>,<SRD>
Example	SYST:ERR?

SYSTem:LANGuage

Sets the command language of the AC Power Source to either SCPI or an available alternate programming language such as APE (Abbreviated Plain English). The language selection is stored in non-volatile memory and is retained after power-off. Both the command and query form can be given regardless of the current language. Note APE is available on Ls models only.

Command Syntax	SYSTem:LANGuage:<language>
Parameters	SCPI | APEN
Example	SYST:LANG:SCPI
Query Syntax	SYSTem LANGuage?
Returned Parameters	<CRD>

SYSTem:LOCal

This command can only be used with the RS-232 interface. It sets the interface in Local state, which enables the front panel controls. For GPIB, use the Local bus message, which controls the ATN control line.

Command Syntax	SYSTem:LOCal
Parameters	None
Example	SYST:LOC
Related Commands	SYST:REM SYST:RWL

SYSTem:REMote

This command can only be used with the RS-232 interface. It sets the interface in the Remote state, which disables all front panel controls except the Local key. Pressing the Local key while in the Remote state returns the front panel to the Local state. For GPIB, use the Local bus message, which controls the ATN control line.

Command Syntax	SYSTem:REMotel
Parameters	None
Example	SYST:REM
Related Commands	SYST:LOC SYST:RWL

SYSTem:RWLock

This command can only be used with the RS-232 interface. It locks out the Local key on the front panel. The SYST:LOC command must be used to unlock the front panel. For GPIB, use the Local Lockout bus message.

Command Syntax	SYSTem:RWLock
Parameters	None
Example	SYST:RWL
Related Commands	SYST:LOC

SYSTem:TEMPerature?

This command will return the internal ambient temperature of the power source in degrees Celsius.

Command Syntax	SYSTem:TEMPerature?
Parameters	none
Example	SYST:TEMP?

SYSTem:VERSion?

This query returns the SCPI version number to which the AC source complies. The returned value is of the form YYYY.V, where YYYY represents the year and V is the revision number for that year.

Query Syntax	SYSTem:VERSion?
Parameters	None
Returned Parameters	<NR2>
Example	SYST:VERS?

4.24 Trace Subsystem Commands

This subsystem programs the output waveform of the 3000Lx and the 4500Lx. Two waveform commands are available: TRACe and DATA. These commands are interchangeable; they both perform the same function.

Subsystem Syntax

TRACe | DATA[1]	
:CATalog?	Return list of defined waveforms
[:DATA] <waveform_name>, <n> , <n>	Assign values to a waveform
:DEFine <waveform_name>[, <waveform_name>|1024]	Create and name new waveform
:DELete	
[:NAME] <waveform_name>	Delete waveform to free its memory
:ALL	Deletes all user defined waveforms at once.

TRACe
DATA

These commands set the values of a user-defined waveform table. The first parameter is the name of a waveform that was previously defined with TRACe:DEFine. Following the name are 1024 data points that define the relative amplitudes of exactly one cycle of the waveform. The first data point defines the relative amplitude that will be output at 0 degrees phase reference. An error will occur if exactly 1024 data points are not sent with the command.

Data points can be in any arbitrary units. The AC source scales the data to an internal format that removes the dc component and ensures that the correct ac rms voltage is output when the waveform is selected. When queried, trace data is returned as normalized values in the range of ±1. You can query the predefined SINusoid, SQUare, or CSINusoid waveform shapes, but you cannot use the predefined names as names for your waveform.

Waveform data is stored in nonvolatile memory and is retained when input power is removed. Up to 50 user-defined waveforms may be created and stored. The *RST and *RCL commands have no effect on user-defined waveforms. A waveform can be selected for output using the FUNCtion:SHAPe, FUNCtion:SHAPe:TRIGgered, or LIST:SHAPe commands.

Command Syntax:	TRACe[:DATA]<waveform_name>,<NRf> {,<NRf>} DATA[:DATA]<waveform_name>,<NRf>{,<NRf>}
Parameters	<waveform_name>, <amplitude>
Example	TRAC flattop,0.1,0.3,0.7,.....-0.7,-0.3,-0.1
Query Syntax:	TRACe[:DATA]?<waveform_name> DATA[:DATA]?<waveform_name>
Returned Parameters	<NR3> (a total of 1024 data points)
Related Commands	TRAC:DATA TRAC:DEL FUNC:SHAP

[1] DATA keyword not implemented in earlier firmware revisions. Use TRACe keyword instead.

TRACe:CATalog
DATA:CATalog

These commands return a list of defined waveform names. The list includes both pre-defined waveforms such as SINusoid, SQUare, and CSINusoid, as well as any user-defined waveforms.

Query Syntax:	TRACe:CATalog?		
	DATA:CATalog?		
Returned Parameters	<SRD>		
Example	TRAC:CAT?		
Related Commands	TRAC:DATA	TRAC:DEL	FUNC:SHAP

TRACe:DEFine
DATA:DEFine

These commands define a new waveform with the name <waveform_name> and allocates storage for its data. The waveform name can then be referenced by the TRACe:DATA command to define its data values.

An optional second argument is accepted for SCPI compatibility although it serves no useful purpose in the AC source. The second argument can be the name of an existing waveform, or the number of points in the trace. When a second name is sent, the data from the first waveform name is copied to the second. When the number of points in the trace is sent, only the number 1024 is accepted.

Command Syntax:	TRACe:DEFine <waveform_name> [, <waveform_name>|1024]		
	DATA:DEFine <waveform_name> [, <waveform_name>|1024]		
Parameters	<waveform_name>		
Example	TRAC:DEF flattop		
Related Commands	TRAC:DATA	TRAC:DEL	FUNC:SHAP

TRACe:DELete
DATA:DELete

These commands delete the user-defined waveform table with the name <waveform_name> and makes its memory available for other waveforms.

Command Syntax:	TRACe:DELete[:NAME]<waveform_name>		
	DATA:DELete[:NAME]<waveform_name>		
Parameters	<waveform name>		
Example	TRAC:DEL flattop		
Related Commands	TRAC:DATA	TRAC:DEL	FUNC:SHAP

TRACe:DELete:ALL
DATA:DELete:ALL

These commands delete all user-defined waveforms in the data table and makes the entire waveform memory available.

Command Syntax:	TRACe:DELete:ALL		
	DATA:DELete:ALL		
Parameters	none		
Example	TRAC:DEL:ALL		
Related Commands	TRAC:DATA	TRAC:DEL	FUNC:SHAP

4.25 Trigger Subsystem

This subsystem controls the triggering of the AC source. See chapter 6.7 under Triggering Output Changes for an explanation of the Trigger Subsystem. The INITiate commands control the initialization of both the transient and measurement trigger systems.

The trigger subsystem must first be enabled using the INITiate commands or no triggering action will occur.

Subsystem Syntax

ABORt	Resets the trigger system to the Idle state
INITiate	
[:IMMediate]	Initiates the system for one trigger
:SEQuence[1|3]	Initiates a specific numbered sequence
:NAME TRANsient | ACQuire	Initiates a specific named sequence
:CONTinuous	
:SEQuence[1] <bool>	Sets continuous initialization
:NAME TRANsient <bool>	Sets continuous initialization
TRIGger	
[:SEQuence1 | :TRANsient]	
[:IMMediate]	Triggers the output immediately
:DELay <n>][2]	Sets the trigger delay time
:SOURce <source>	Sets the trigger source (BUS|EXT|IMM)
:SEQuence2 | :SYNCronize	
:SOURce PHAse | IMMediate	Sets the synchronous source
:PHASe <n>]	Sets the synchronous phase reference
:SEQuence3 | :ACQuire	
[:IMMediate]	Triggers the measurement immediately
:SOURce <source>	Sets the trigger source (BUS|EXT|TTLT)
:SEQuence1	
:DEFine TRANsient	Sets or queries the SEQ1 name
:SEQuence2	
:DEFine SYNChronize	Sets or queries the SEQ2 name
:SEQuence3	
:DEFine ACQuire	Sets or queries the SEQ3 name

ABORt

This command resets the measurement and transient trigger systems to the Idle state. Any output transient or measurement that is in progress is immediately aborted. ABORt also cancels any lists or pulses that may be in process.

ABORt also resets the WTG bit in the Operation Condition Status register (see). ABORt is executed at power turn-on and upon execution of *RCL, RST, or any implied abort command (see List Subsystem).

Note: If INITiate:CONTinuous ON has been programmed, the trigger subsystem initiates itself immediately after ABORt, thereby setting the WTG bit.

[2] TRIGger:DELay not implemented in earlier firmware versions.

Command Syntax	ABORt
Parameters	None
Examples	ABOR
Related Commands	INIT *RST *TRG TRIG

INITiate:SEQuence
INITiate:NAME

The INITiate commands control the initiation of both the transient generator and the measurement trigger systems. They cause the trigger system to make a transition from the Idle state to the Waiting-for-Trigger state. If the trigger system is not in the Idle state, the initiate commands are ignored.

INITiate:SEQuence and INITiate:NAME initiate the trigger systems to reference trigger sequences. INITiate:SEQuence references a trigger sequence by its number, while INITiate:NAME references a sequence by its name. The correspondence between sequence names and numbers is:

Sequence Number	Sequence Name	Description
1(default)	TRANsient	Step, pulse, or list transient trigger sequence
3	ACQuire	Measurement acquire trigger sequence

Command Syntax	INITiate[:IMMediate]:SEQuence[1 | 3] INITiate[:IMMediate]:NAME<name>
Parameters	For INIT:NAME TRANsient | ACQuire
Examples	INIT:SEQ1 INIT:NAME ACQ
Related Commands	ABOR INIT:CONT TRIG *TRG

INITiate:CONTinuous:SEQuence
INITiate:CONTinuous:NAME

These commands control the transient generator trigger system.

- 1 or ON continuously initiates the transient trigger system.
- 0 or OFF turns off continuous triggering. In this state, the trigger system must be initiated for each triggered event using INITiate:SEQuence.

INITiate:CONTinuous:SEQuence references the transient trigger sequence by its number, while INITiate:CONTinuous:NAME references it by its name.

Command Syntax	INITiate:CONTinuous:SEQuence[1]<bool> INITiate:CONTinuous:NAME TRANsient,<bool>
Parameters	0|1|OFF|ON
*RST Value	OFF
Examples	INIT:CONT:SEQ ON INIT:CONT:NAME TRAN, 1
Related Commands	ABOR INIT:CONT TRIG *TRG

TRIGger

When the trigger subsystem has been initiated, the TRIGger command generates a trigger signal regardless of the selected trigger source.

Command Syntax	TRIGger[:SEQuence1][:IMMediate] TRIGger[:TRANsient][:IMMediate]
Parameters	None
Examples	TRIG TRIG:TRAN TRIG:SEQ1:IMM
Related Commands	ABOR TRIG:SOUR TRIG:DEL TRIG:SYNC TRIG:SYNC:PHAS INIT INIT:CONT *TRG *WAI

TRIGger:DELay

This command sets the time delay between the detection of a trigger signal and the start of any corresponding trigger action. After the time delay has elapsed, the trigger is implemented unless the trigger system is also waiting for a sync signal that has been specified by TRIGger:SYNChronous:PHASe.

Command Syntax	TRIGger[:SEQuence1]:DELay<NRf+> TRIGger[:TRANsient]:DELay<NRf+>
Parameters	3-phase models: 0 to 1.07533E6|MINimum|MAXimum 1-phase models: 0 to 4.30133E5|MINimum|MAXimum
Unit	s (seconds)
*RST Value	0
Examples	TRIG:DEL .25 TRIG:DEL MAX TRIG:TRAN:DEL 1
Query Syntax	TRIGger[:SEQuence1]:DELay? TRIGger[:TRANsient]:DELay?
Returned Parameters	<NR3>
Related Commands	ABOR TRIG TRIG:SOUR TRIG:SYNC TRIG:SYNC:PHAS INIT INIT:CONT *TRG *WAI

TRIGger:SOURce

This command selects the trigger source for the first sequence in generating a step, pulse, or list output as follows:

BUS	IEEE-488 device, *TRG, or <GET> (Group Execute Trigger)
EXTernal	AC source's backpanel Trigger In1 SMA connector
IMMediate	trigger is generated as soon as the trigger system is initiated.

Command Syntax	TRIGger[:SEQuence1]:SOURce<CRD> TRIGger[:TRANsient]:SOURce<CRD>
Parameters	BUS | EXTernal | IMMediate
*RST Value	BUS
Examples	TRIG:SOUR BUS TRIG:TRAN:SOUR EXT
Query Syntax	TRIGger[:SEQuence1]:SOURce? TRIGger[:TRANsient]:SOURce?
Returned Parameters	<CRD>
Related Commands	ABOR TRIG TRIG:DEL TRIG:SYNC TRIG:SYNC:PHAS INIT INIT:CONT *TRG *WAI

TRIGger:SEQuence2:SOURce
TRIGger:SYNChronize:SOURce

These commands select the synchronizing trigger source in generating a step, pulse, or list output as follows:

IMMediate	starts the transient output immediately, unless a delay time other than 0 has been specified by TRIGger:DELay. In this case the transient output starts after the expiration of the delay time.
PHASe	starts the transient output at the reference phase set by TRIG:SYNC:PHAS.

Command Syntax	TRIGger:SEQuence2:SOURce<CRD> TRIGger:SYNChronize:SOURce<CRD>
Parameters	IMMediate | PHASe
*RST Value	IMM
Examples	TRIG:SYNC:SOUR IMM TRIG:SEQ2:SOUR PHAS
Query Syntax	TRIGger:SEQuence2:SOURce? TRIGger:SYNChronize:SOURce?
Returned Parameters	<CRD>
Related Commands	ABOR TRIG:DEL TRIG:SYNC TRIG:SYNC:PHAS INIT INIT:CONT *TRG *WAI

TRIGger:SEQuence2:PHASe
TRIGger:SYNCHronize:PHASe

These commands set the phase angle with respect to an internal phase reference at which PHASe:SYNChronous:SOURce becomes true. The range is from -360 to +360 degrees.

Command Syntax	TRIGger:SEQuence2:PHASe<NRf+> TRIGger:SYNChronize:PHASe<NRf+>
Parameters	-360° to +360°
*RST Value	0
Examples	TRIG:SYNC:PHAS 90 TRIG:SEQ2:PHAS 180
Query Syntax	TRIGger:SEQuence2:PHASe? TRIGger:SYNChronize:PHASe?
Returned Parameters	<NR3>
Related Commands	ABOR TRIG:DEL TRIG:SYNC TRIG:SYNC:PHAS INIT INIT:CONT *TRG *WAI

TRIGger:SEQuence3
TRIGger:ACQuire

When the trigger subsystem has been initiated, these commands generate a measurement trigger regardless of the selected trigger source. The measurement trigger causes the AC source to digitize the instantaneous output voltage and current for several output cycles and store the results in a buffer.

The FETCh commands return the requested calculation from this acquired data. When the measurement completes, the WTG bit in the Status Operation Condition register is cleared.

Command Syntax	TRIGger:SEQuence3[:IMMediate] TRIGger:ACQuire[:IMMediate]
Parameters	None
Examples	TRIG:ACQ TRIG:SEQ3:IMM
Related Commands	ABOR TRIG:SOUR TRIG:DEL TRIG:SYNC TRIG:SYNC:PHAS INIT INIT:CONT *TRG *WAI

TRIGger:SEQuence3:SOURce
TRIGger:ACQuire:SOURce

These commands select the trigger source for a triggered measurement sequence as follows:

BUS	IEEE-488 device, *TRG, or <GET> (Group Execute Trigger)
EXTernal	backpanel Trigger In1 SMA connector
TTLTrg	the signal driving the Trigger Out1 SMA

Command Syntax	TRIGger:SEQuence3:SOURce<CRD>
Command Syntax	TRIGger:ACQuire:SOURce<CRD>
Parameters	BUS | EXT | TTLT
*RST Value	BUS
Examples	TRIG:ACQ:SOUR BUS TRIG:SEQ3:SOUR EXT
Query Syntax	TRIGger:SEQuence3:SOURce? TRIGger:ACQuire:SOURce?
Returned Parameters	<CRD>
Related Commands	ABOR TRIG:SOUR TRIG:DEL TRIG:SYNC TRIG:SYNC:PHAS INIT INIT:CONT *TRG *WAI

TRIGger:SEQuence1:DEFine
TRIGger:SEQuence2:DEFine
TRIGger:SEQuence3:DEFine

These commands define the names that are aliased to trigger sequences 1, 2 and 3. The command accepts only TRANsient for sequence 1, SYNChronous for sequence 2, and ACQuire for sequence 3 as predefined names. The query allows the user to query the instrument names aliased to sequences 1, 2, and 3.

Command Syntax	TRIGger:SEQuence1:DEFine TRANsient TRIGger:SEQuence2:DEFine SYNChronous TRIGger:SEQuence3:DEFine ACQuire
Parameters	TRANsient, SYNChronous, ACQuire
Examples	SEQ1:DEF TRAN SEQ3:DEF ACQ
Query Syntax	TRIGger:SEQuence1:DEFine? TRIGger:SEQuence2:DEFine? TRIGger:SEQuence3:DEFine?
Returned Parameters	<CRD>

5. Common Commands

Common commands begin with an * and consist of three letters (command) or three letters and a ? (query). Common commands are defined by the IEEE 488.2 standard to perform some common interface functions. The 3000Lx and the 4500Lx respond to the required common commands that control status reporting, synchronization, and internal operations. The 3000Lx and the 4500Lx also respond to optional common commands that control triggers, power-on conditions, and stored operating parameters.

Common commands and queries are listed alphabetically. If a command has a corresponding query that simply returns the data or status specified by the command, then both command and query are included under the explanation for the command. If a query does not have a corresponding command or is functionally different from the command, then the query is listed separately. The description for each common command or query specifies any status registers affected. Refer to chapter 7 under Programming the Status and Event Registers which explains how to read specific register bits and use the information that they return.

Common Commands Syntax

*CLS	Clear status
*ESE <n>	Standard event status enable
*ESE?	Return standard event status enable
*ESR?	Return event status register
*IDN?	Return instrument identification
*OPC	Enable "operation complete" bit in ESR
*OPC?	Return a "1" when operation complete
*OPT?	Return option number
*PSC <bool>	Power-on status clear state set/reset
*PSC?	Return power-on status clear state
*RCL <n>	Recall instrument state
*RST	Reset
*SAV <n>	Save instrument state
*SRE <n>	Set service request enable register
*SRE?	Return service request enable register
*STB?	Return status byte
*TRG	Trigger
*TST?	Perform selftest, then return result
*WAI	Hold off bus until all device commands done

5.1 *CLS

This command clears the following registers (see chapter 7 under Programming the Status and Event Registers for descriptions of all registers):

- Standard Event Status
- Operation Status Event
- Questionable Status Event
- Status Byte
- Error Queue

Command Syntax	*CLS
Parameters	None

***ESE**

This command programs the Standard Event Status Enable register bits. The programming determines which events of the Standard Event Status Event register (see *ESR?) are allowed to set the ESB (Event Summary Bit) of the Status Byte register. A "1" in the bit position enables the corresponding event. All of the enabled events of the Standard Event Status Event Register are logically ORed to cause the Event Summary Bit (ESB) of the Status Byte Register to be set. See section 7.5 for descriptions of the Standard Event Status registers.

The query reads the Standard Event Status Enable register.

Bit Position	7	6	5	4	3	2	1	0
Bit Name	PON	not used	CME	EXE	DDE	QYE	not used	OPC
Bit Weight	128		32	16	8	4		1

Table 5-1: Bit Configuration of Standard Event Status Enable Register

CME	Command error	DDE	Device-dependent error
EXE	Execution error	OPC	Operation complete
PON	Power-on	QYE	Query error

Command Syntax	*ESE <NRf>
Parameters	0 - 255
Power-On Value	(See *PSC)
Example	*ESE 129
Query Syntax	*ESE?
Returned Parameters	<NR1>(Register value)
Related Commands	*ESR? *PSC *STB?

5.2 *ESR?

This query reads the Standard Event Status Event register. Reading the register clears it. The bit configuration of this register is the same as the Standard Event Status Enable register (see *ESE). See section 7.5 for a detailed explanation of this register.

Query Syntax	*ESR?
Parameters	None
Returned Parameters	<NR1>(Register value)
Related Commands	*CLS *ESE *ESE? *OPC

5.3 *IDN?

This query requests the AC source to identify itself. It returns the data in four fields separated by commas.

Query Syntax	*IDN?	
Returned Parameters	<AARD>	
	Field	Information
	California Instruments	Manufacturer
	4500LX	6 to 8-digit model number
	nnnnn	5-character serial number or 0
	<R>.xx.xx	Revision levels of firmware
Example	CALIFORNIA INSTRUMENTS,4500LX,12435,0.1	

5.4 *OPC

This command causes the interface to set the OPC bit (bit 0) of the Standard Event Status register when the AC source has completed all pending operations. (See *ESE for the bit configuration of the Standard Event Status registers.) Pending operations are complete when:

- All commands sent before *OPC have been executed. This includes overlapped commands. Most commands are sequential and are completed before the next command is executed. Overlapped commands are executed in parallel with other commands. Commands that affect output voltage or state, relays, and trigger actions are overlapped with subsequent commands sent to the Lx\Ls Series. The *OPC command provides notification that all overlapped commands have been completed.
- All triggered actions are completed and the trigger system returns to the Idle state.

*OPC does not prevent processing of subsequent commands but Bit 0 will not be set until all pending operations are completed.

The query causes the interface to place an ASCII "1" in the Output Queue when all pending operations are completed.

Command Syntax	*OPC
Parameters	None
Query Syntax	*OPC?
Returned Parameters	<NR1>
Related Commands	*TRIG *WAI

5.5 *OPT?

This query requests the AC Source to identify any options that are installed. Options are identified by number. A 0 indicates no options are installed.

Query Syntax	*OPT?
Returned Parameters	<AARD>

5.6 *PSC

This command controls the automatic clearing at power-on of the Service Request Enable and the Standard Event Status Enable registers (see chapter 7 under Programming the Status and Event Registers for register details):

*PSC ON | 1	prevents the register contents from being saved causing them to be cleared at power-on. This prevents a PON event from generating SRQ at power-on.
PSC OFF | 0	saves the contents of the Standard Event Enable and Service Request Enable registers in nonvolatile memory and recalls them at power-on. This allows a PON event to generate SRQ at power-on.

Command Syntax	*PSC<bool>
Parameters	0 | 1 | OFF | ON
Example	*PSC 0 *PSC 1
Query Syntax	*PSC?
Returned Parameters	0 | 1
Related Commands	*ESE *SRE

5.7 *RCL

Warning **Recalling a previously stored state may place hazardous voltages at the AC source output.**

This command restores the AC source to a state that was previously stored in memory with a *SAV command to the specified location. All states are recalled with the following exceptions:

- CAL:STATe is set to OFF
- the trigger system is set to the Idle state by an implied ABORt command (this cancels any uncompleted trigger actions)

The device state stored in location 0 is automatically recalled at power turn-on when the OUTPut:PON:STATE is set to RCL0. This register only saves steady state setting, not the transient list data. All other registers (1-15) saved both the steady state settings and the transient list data record.

Command Syntax	*RCL <NRf>
Parameters	0 through 15
Example	*RCL 3
Related Commands	*PSC *RST *SAV

Note that recalling settings and transient list information from non-volatile memory takes some amount of time as shown in the table below. If you develop a test program that uses the *RCL or *SAV commands, insert the amount of delay shown in the table before sending the next command in your program.

Command:	*RCL 0	*RCL n (n = 1 to 15)	*SAV 0	*SAV n (n = 1 to 15)
Execution time:	20 msec	40 msec	80 msec	40 msec

5.8 *RST

This command resets the AC source to the factory-defined states shown in Table 5-2.

Item	Value	Item	Value
CAL:STAT	OFF	[SOUR:]FUNC:MODE	FIX
		[SOUR:]FUNC:TRIG	SIN
		[SOUR:]FUNC:CSIN	100%
		[SOUR:]LIST:COUN	1
		[SOUR:]LIST:STEP	AUTO
INIT:CONT	OFF	[SOUR:]PHAS	ø1 = 0°, ø2 = 240°, ø3 = 120°
INST:COUP	ALL	[SOUR:]PHAS:TRIG	ø1 = 0°, ø2 = 240°, ø3 = 120°
INST:NSEL	1	[SOUR:]PHAS:MODE	FIX
OUTP	OFF	[SOUR:]PULS:COUN	1
OUTP:DFI	OFF	[SOUR:]PULS:DCYC	50%
OUTP:DFI:SOUR	OFF	[SOUR:]PULS:HOLD	WIDT
OUTP:PROT:DEL	100ms	[SOUR:]PULS:PER	1
OUTP:RI:MODE	OFF	[SOUR:]PULS:WIDT	0.01667s
OUTP:TTLT	OFF	[SOUR:]VOLT	1
OUTP:TTLT:SOUR	BOT	[SOUR:]VOLT:TRIG	1
SENS:SWE:OFFS:POIN	0	[SOUR:]VOLT:MODE	FIX
SENS:SWE:TINT	21µs	[SOUR:]VOLT:PROT	MAX
SENS:WIND	Rectangular	[SOUR:]VOLT:RANG	MAX
[SOUR:]CURR	1A	[SOUR:]VOLT:SENS:SOUR	INT
[SOUR:]CURR:PROT:STAT	OFF	[SOUR:]VOLT:SLEW	INF
[SOUR:]FREQ	60Hz	[SOUR:]VOLT:SLEW:MODE	FIX
[SOUR:]FREQ:MODE	FIX	[SOUR:]VOLT:SLEW:TRIG	INF
[SOUR:]FREQ:SLEW	INF	TRIG:DEL	0
[SOUR:]FREQ:SLEW:MODE	FIX	TRIG:SOUR	BUS
[SOUR:]FREQ:SLEW:TRIG	INF	TRIG:SEQ2:SOUR	IMM
[SOUR:]FREQ:TRIG	60Hz	TRIG:SEQ2:PHAS	0
[SOUR:]FUNC	SIN	TRIG:SEQ3:SOUR	BUS

*Table 5-2 : factory-defined *RST states*

Note ***RST does not clear any of the status registers or the error queue, and does not affect any interface error conditions. *RST does not affect the data in any of the lists.**
***RST sets the trigger system to the Idle state.**

Command Syntax	*RST	
Parameters	None	
Related Commands	*PSC	*SAV

5.9 *SAV

This command stores the present state of the AC source to a specified location in memory. Up to 16 setup states can be stored in nonvolatile memory. If a particular state is desired at power-on, it should be stored in location 0. It then will be recalled at power-on if the OUTPut:PON:STATe command is set to RCL0. Use *RCL to retrieve instrument states.

Command Syntax	*SAV
Parameters	0 to 15
Related Commands	*PSC *RCL *RST

Note that saving settings and transient list information from non-volatile memory takes some amount of time as shown in the table below. If you develop a test program that uses the *RCL or *SAV commands, insert the amount of delay shown in the table before sending the next command in your program.

Command:	*RCL 0	*RCL n (n = 1 to 15)	*SAV 0	*SAV n (n = 1 to 15)
Execution time:	20 msec	40 msec	80 msec	40 msec

5.10 *SRE

This command sets the condition of the Service Request Enable Register. This register determines which bits from the Status Byte Register (see *STB for its bit configuration) are allowed to set the Master Status Summary (MSS) bit and the Request for Service (RQS) summary bit. A 1 in any Service Request Enable Register bit position enables the corresponding Status Byte Register bit and all such enabled bits then are logically ORed to cause Bit 6 of the Status Byte Register to be set. See chapter 7 under Programming the Status and Event Registers for more details concerning this process.

When the controller conducts a serial poll in response to SRQ, the RQS bit is cleared, but the MSS bit is not. When *SRE is cleared (by programming it with 0), the AC source cannot generate an SRQ to the controller.

Command Syntax	*SRE <NRf>
Parameters	0 to 255
Default Value	(See *PSC)
Example	*SRE 128
Query Syntax	*SRE?
Returned Parameters	<NR1>(Register binary value)
Related Commands	*ESE *ESR *PSC

5.11 *STB?

This query reads the Status Byte register, which contains the status summary bits and the Output Queue MAV bit. Reading the Status Byte register does not clear it. The input summary bits are cleared when the appropriate event registers are read (see chapter 7 under Programming the Status and Event Registers for more information). A serial poll also returns the value of the Status Byte register, except that bit 6 returns Request for Service (RQS) instead of Master Status Summary (MSS). A serial poll clears RQS, but not MSS. When MSS is set, it indicates that the AC source has one or more reasons for requesting service.

Bit Position	7	6	5	4	3	2 - 0
Bit Name	OPER	MSS RQS	ESB	MAV	QUES	not used

Bit Position	7	6	5	4	3	2 - 0
Bit Weight	128	64	32	16	8	

Table 5-3: Bit Configuration of Status Byte Register

OPER =	operation status summary	MSS =	master status summary
ESB =	event status byte summary	RQS =	request for service
QUES =	questionable status summary	MAV =	message available

Query Syntax	*STB?
Returned Parameters	<NR1> (Register binary value)
Related Commands	*SRE *ESE *ESR

5.12 *TRG

This command generates a trigger to any subsystem that has BUS selected as its source (for example, TRIG:SOUR BUS).The command has the same affect as the Group Execute Trigger (<GET>) command.

Command Syntax	*TRG
Parameters	None
Related Commands	ABOR INIT TRIG[:IMM]

5.13 *TST?

This query causes the AC Source to do a self-test and report any errors. The selftest will run until the first error is encountered and terminate. The response to the query will either be the first error encountered or 0 is no error was found. (Selftest passed). For a list of error messages, refer to Appendix C.

Note: The selftest should always be run in 3 phase mode on all Lx models and Ls models with the –MODE option. If the selftest is run in single phase mode, not all aspects of the Phase 2/B and 3/C hardware will be tested as a result. If the power source is a Ls-1 single phase only configuration, the selftest can only be run in single phase mode.

Note: The selftest is always performed at 400 Hz, 115 Vac. This is required to obtain the correct internal test current based on the buit-in selftest loads. However, the output relay is open during the selftest and no output is present on the output terminals during the selftest. At the end of the selftest, the output relay remains open and the voltage is set to 0V. The frequence remains set to 400 Hz on Ls/Lx models with firmware revisions 0.97 or lower. On Lx/Ls models with firmware revision 0.98 or higher, the programmed frequency will return to the value set before execution of the selftest command.

Query Syntax	*TST?	
Returned Parameters	<NR1>	0 indicates the AC source has passed selftest. Nonzero indicates an error code.

5.14 *WAI

This command instructs the AC source not to process any further commands until all pending operations are completed. Pending operations are complete when:

- All commands sent before *WAI have been executed. This includes overlapped commands. Most commands are sequential and are completed before the next command is executed. Overlapped commands are executed in parallel with other commands. Commands that affect output voltage or state, relays, and trigger actions are overlapped with subsequent commands sent to the AC source. The *WAI command prevents subsequent commands from being executed before any overlapped commands have been completed.
- All triggered actions are completed and the trigger system returns to the Idle state.

*WAI can be aborted only by sending the an IEEE-488 DCL (Device Clear) command.

Command Syntax	*WAI
Parameters	None
Related Commands	*OPC

6. Programming Examples

6.1 Introduction

This chapter contains examples on how to program your AC source. Simple examples show you how to program:

- output functions such as voltage, frequency, and phase
- the transient waveform generator
- internal and external triggers
- measurement functions
- user-defined waveforms
- the status and protection functions

These examples in this chapter are generic SCPI commands. See chapter 2 for information about encoding the commands as language strings. Where appropriate, optional commands are shown for clarity in the examples.

6.2 Programming the Output

Power-on Initialization

When the AC source is first turned on, it wakes up with the output state set OFF. In this state the output voltage is set to 0. The following commands are given implicitly at power-on:

*RST

*CLS

STATus:PRESet

*SRE 0

*ESE 0

*RST is a convenient way to program all parameters to a known state. Refer to the *RST command in Section 5 to see how each programmable parameter is set by *RST. Refer to the *PSC command in Section 5 for more information on the power-on initialization of the *ESE and the *SRE registers.

Enabling the Output

To enable the output, use the command:

OUTPut ON

AC Voltage and Frequency

The ac rms output voltage is controlled with the VOLTage command. For example, to set the ac output voltage to 125 volts rms, use:

VOLTage 125

In the three-phase mode, all phases are programmed to 125 volts rms because the INSTrument:COUPle at *RST is set to ALL.

The AC source can be programmed to turn off its output if the ac output voltage exceeds a preset peak voltage limit. This protection feature is implemented with the VOLTage:PROTection command as explained in chapter 4.

Maximum Voltage

The maximum rms output voltage that can be programmed can be queried with:

VOLTage? MAX

The maximum voltage that the AC source can output is limited by the peak value of the waveform. This is 425 V peak on all models. Since the user programs output voltage in units of rms volts, the maximum value that can be programmed is dependent on the peak-to-rms ratio (crest factor) of the selected waveform. For a sine waveform, the maximum ac voltage that can be programmed is 300 volts.

Note: You cannot program a voltage that produces a higher volt-second on the output than a 300V rms sinewave.

Because voltage commands are coupled with the waveform shape command, changing voltages without changing the waveform shape or voltage offset may result in an error if the resulting peak voltage amplitude exceeds the maximum voltage rating of the AC source. Refer to "Coupled Commands" for more information.

Voltage Ranges

The Lx\Ls Series has two voltage ranges[3] that are controlled by a relay that switches taps on an output transformer. The command that controls the range is:

VOLTage:RANGe MIN | MAX | 150 | 300

When the range is set to MIN (or 150), the maximum rms voltage that can be programmed for a sine waveshape is 150 volts, but it is only on this range that the maximum output current rating is available. For other waveshapes, the maximum programmable voltage may be different, depending on the waveform's voltage crest factor (peak-to-rms ratio).

On the Lx Series, the VOLTage:RANGe command is coupled with the CURRent command. This means that the maximum current limit that can be programmed at a given time depends on the voltage range setting in which the unit is presently operating. Refer to "Coupled Commands" for more information.

Frequency

The output frequency is controlled with the FREQuency command. To set the output frequency to 50 Hz, use:

FREQuency 50

Voltage and Frequency Slew Rates

Voltage Slew

The AC source has the ability to control the slew rate of ac amplitude and frequency changes. This can be used to generate ramps or to protect sensitive loads. To set the voltage slew rate to 20 volts per second, use:

VOLTage:SLEW 20

[3] Actual voltage range values may differ from those shown here based on Model (Lx or Ls) and configuration options (STD, -HV or –EVH). Use Limit or Max query to determine actual voltage range values.

At *RST the slew rate is set to INFinity, which means that ac voltage changes occur at the fastest possible slew rate. The slew rate applies to programmed changes in ac output amplitude while the unit is operating in fixed mode. Amplitude changes made by the step, pulse, and list transients are controlled by the same rules that apply to all other functions that are subject to transient control. See "Programming Transient Outputs".

Output voltage changes caused by the OUTPut:STATe command, by a protection feature disabling the output, or as a result of load changes are not subject to this slew rate control.

Frequency Slew

The AC source also has the ability to control the slew rate of frequency changes. To set the frequency slew rate to 30 Hz per second, use:

FREQuency:SLEW 30

At *RST the slew rate is set to INFinity, which means that frequency changes occur instantaneously. The frequency slew rate applies to programmed changes in frequency while the unit is operating in fixed mode. Frequency changes made by the step, pulse, and list transients are controlled by the same rules that apply to all other functions that are subject to transient control. See "Programming Transient Outputs".

6.2.1 Waveform Shapes

At *RST, the AC source supplies a sine waveform, but other shapes can be selected. There are built-in tables for sine, square and clipped sine waveforms. In addition, the user can define arbitrary waveshapes by creating a 1024 point table of amplitudes for a single cycle.

As shown in the following examples, the FUNCtion[:SHAPe] command selects the output waveform.

Square Waveform

To select the square output waveform, use:

FUNCtion:SHAPe SQUare

Clipped Waveform

To select a clipped sine waveform use:

FUNCtion:SHAPe CSINusoid

To set the clipping level to 50%, use:

FUNCtion:SHAPe:CSINusoid 50

The clipping level is the percentage of the peak amplitude at which clipping occurs.

The clipping level can also be specified in terms of the percent total harmonic distortion in the clipped sine waveform by adding a THD suffix to the command. For example;

FUNCtion:SHAPe:CSINusoid 10 THD

sets the clipping level so that the clipped sine has 10% distortion.

User-Defined Waveform

To create a user-defined waveform, use TRACe:DEFine command to create a name for the waveform, then use the TRACe[:DATA] command to send the list of 1024 amplitude points. The waveform can then be selected using the FUNCtion command. For example, a waveform named "Distortion" can be created with:

TRACe:DEFine DISTORTION

TRACe:DATA DISTORTION, n1, n2, n3, ..., n1024

where n1 ... n1024 are the data points that define the relative amplitudes of exactly one cycle of the waveform. The first data point defines the amplitude that will be output at 0 degrees phase reference.

Data points can be in any arbitrary units. The AC source scales the data to an internal format that removes the dc component and ensures that the correct ac rms voltage is output when the waveform is selected. When queried, trace data is returned as normalized values in the range of ±1. Waveform data is stored in nonvolatile memory and is retained when input power is removed. Up to 50 user defined waveforms may be created and stored.

Because waveform shape commands are coupled with the voltage commands, changing waveforms without changing the programmed voltage may result in an error if the resulting peak voltage amplitude exceeds the maximum voltage rating of the AC source. Refer to "Coupled Commands" for more information.

6.2.2 Individual Phases

The following functions can be controlled separately in each phase:

- VOLTage
- CURRent
- PHASe
- MEASure
- FETCh
- CALibrate

Selecting a Phase

Two commands determine which output phase or phases receive commands in the three-phase mode. These are:

INSTrument:COUPle ALL | NONE

INSTrument:NSELect <n>

The *RST setting for INSTrument:COUPle is ALL. This setting causes programming commands to be sent to all output phases simultaneously.

To send a programming command to only one of the output phases, set INSTrument:COUPle to NONE, then select the desired output to receive the command with INSTrument:NSELect. For example, when the commands

INSTrument:COUPle NONE

INSTrument:NSELect 2

are sent, all subsequent voltage commands will go to output phase 2, and all measurement queries will return readings from output phase 2.

The INSTrument:COUPle command has no effect on queries. In the three-phase mode, queries are always directed to the output selected by INSTrument:NSELect.

Programming the Output Phase

You can control the phase of the ac voltage waveform relative to an internal reference with:

PHASe <n>

which sets the phase in degrees. If <n> is positive, the voltage waveform leads the internal reference.

The PHASe command sets the relative phase of each of the outputs. The INSTrument:COUPle setting is ignored by the PHASe command - it always controls the output selected by INSTrument:NSELect.

6.2.3 Current Limit

All models have a programmable rms current limit function. The command to set this limit is:

CURRent <n>

where <n> is the rms current limit in amperes.

If the load attempts to draw more current than the programmed limit, the output voltage is reduced to keep the rms current within the limit. Since the rms detection involves a filter time constant that is long compared to a single output cycle, the response time of the rms current limit is not instantaneous. When the output voltage is reduced, its waveform is preserved (the output waveform is attenuated, not clipped).

The AC source can be programmed to turn off its output if the rms current limit is reached. This protection feature is implemented with the CURRent:PROTection:STATe command as explained in chapter 3.

Note: The CURRent command is coupled with the VOLTage:RANGe.This means that the maximum current limit that can be programmed at a given time depends on the voltage range setting in which the unit is presently operating. Refer to "Coupled Commands" for more information.

6.3 Coupled Commands

This section describes how to avoid programming errors that may be caused because of the error checking done for coupled commands such as VOLTage:LEVel and FUNCtion:SHAPe.

Commands that are coupled to the VOLTage and SHAPe commands are the output transient commands that control step, pulse and list generation. When an output transient is initiated (ready to receive a trigger), the error checking that takes place for maximum peak output voltage includes any combination of voltage, voltage offset, or function shape that can occur during the transient.

CURRent:LEVel and VOLTage:RANGe

Programming the current limit by itself to a value that is greater than the maximum allowed on the presently programmed voltage range causes an error. If the commands

VOLTage:RANGe 300

CURRent 10

are sent, an error will be generated because the CURRent command is requesting a current limit that is outside the maximum value allowed on that voltage range.

Programming the VOLTage:RANGe by itself causes the programmed current limit to be set to the maximum for the given range if it had previously been higher than the maximum setting for the new range. If the commands

VOLTage:RANGe 150

CURRent 10

VOLTage:RANGe 300

are sent, no error will be generated because the second VOLTage:RANGe command automatically sets the programmed current limit to 5, which is the maximum value for the programmed voltage range.

Programming both the current and the voltage range in one program message unit can be done in any order and will not cause an error if the final combination specifies a valid current limit for the indicated range. If the commands

VOLTage:RANGe 300

CURRent 10;:VOLTage:RANGe 150

are sent, no error will be generated because the combined current limit and voltage range specified on the second line are within the output ratings of above models.

6.4 Programming Output Transients

Output transients are used to:

- Synchronize output changes with a particular phase of the voltage waveform.
- Synchronize output changes with internal or external trigger signals.
- Simulate surge, sag, and dropout conditions with precise control of duration and phase.
- Create complex, multi-level sequences of output changes.
- Create output changes that have rapid or precise timing requirements.

The following AC source functions are subject to transient control:

- AC output voltage
- Frequency
- Phase
- Waveform shape
- AC voltage slew rate
- Frequency slew rate

The following transient modes can be generated:

Step	generates a single triggered output change.
Pulse	generates an output change which returns to its original state after some time period.
List	generates a sequence of output changes, each with an associated dwell time or paced by triggers.
Fixed	turns off the transient functions, which means that only the IMMediate values are used as the data source for a particular function.

At *RST all functions are set to FIXed, which turns off the transient functions.

6.4.1 Transient System Model

Figure 6-1 is a model of the transient system. The figure shows the transient modes and the source of the data that generates each mode. When a trigger is received in step or pulse modes, the triggered functions are set from their IMMediate to their TRIGgered value.

Note: In Step mode, the triggered value becomes the immediate value. In Pulse mode, the functions return to their immediate value during the low portion of the pulse.

If there are no further pulses, the immediate value remains in effect. In List mode, the functions return to their immediate value at the completion of the list.

You can mix FIXed, STEP, PULSe, and LIST modes among most functions. When a trigger is received, each function will react in a manner defined by its mode. However, this is subject to the following limitation to ensure the proper output voltage in all cases:

The ac voltage, waveform shape, and voltage slew functions cannot be set to Step or Pulse mode if one of them is set to List mode.

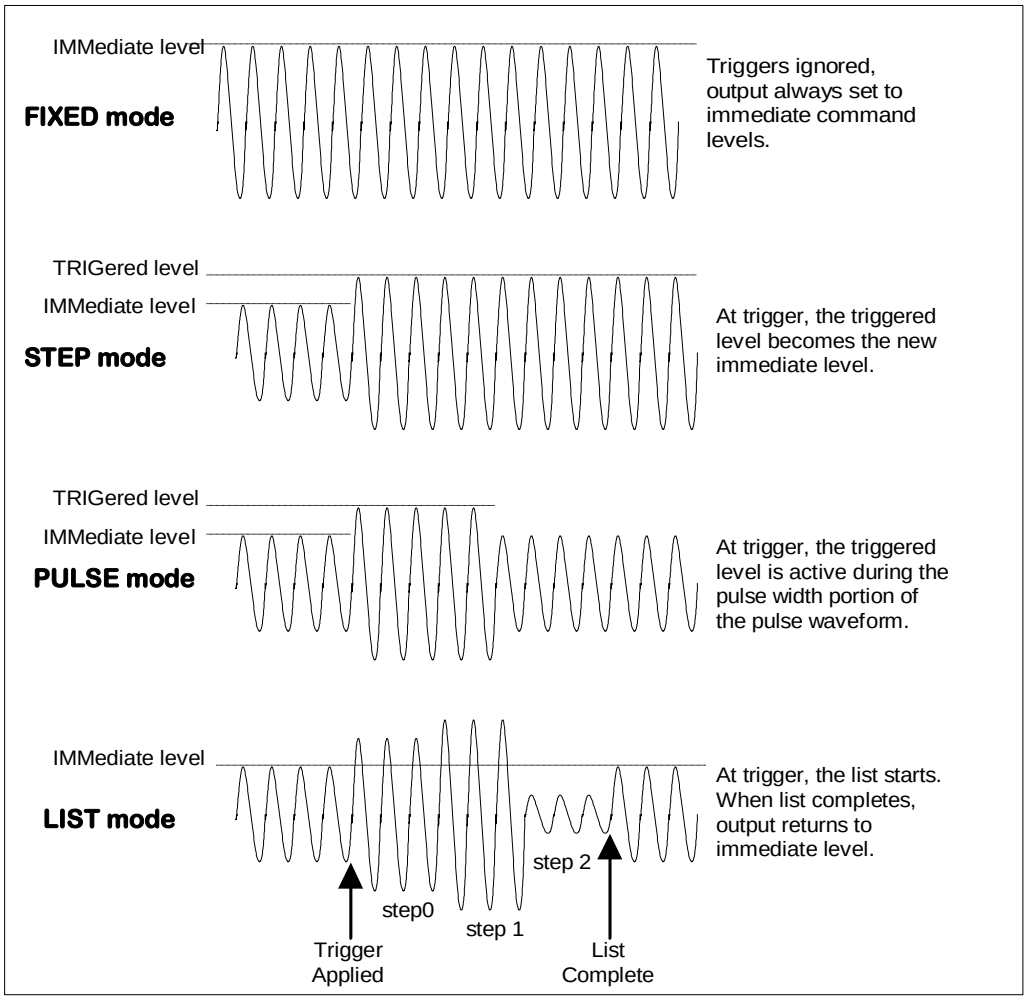

Figure 6-1: Model of transient system.

6.5 Step and Pulse Transients

Proceed as follows to setup step and pulse transients:

1. Set the functions that you do **not** want to generate transients to FIXed mode. A convenient way to do this is with the *RST command. Then set the mode of the function that will generate the transient to STEP or PULSe as required. For example, to enable the voltage function to generate a single triggered output voltage change, use:

   **RST*

   VOLTage:MODE STEP

2. Set the triggered level of the function that will generate the transient. For example, if the previously programmed voltage function is going to step the output voltage amplitude to 135 volts upon receipt of a trigger, use:

   VOLTage:TRIGger 135

3. Select the trigger source that will generate the trigger. For example, to select the external Trigger In1 SMA connector as the trigger source, use:

   TRIGger:TRANsient:SOURce EXTernal

   Trigger sources are discussed in detail under "Triggering Output Changes".

4. Only perform this step if you have selected PULSE as the transient mode in Step 1. Specify the pulse count, the pulse period, and then either the duty cycle or the pulse width using the following commands:

   - PULSe:COUNt 1 — specifies 1 output pulse
   - PULSe:PERiod 1 — specifies a pulse period of 1 second
   - PULSe:DCYCle 50 — specifies a duty cycle of 50%
   - PULSe:WIDTh .5 — specifies a pulse width of .5 seconds (not necessary in this case since a duty cycle has already been specified)

5. Initiate the transient trigger system to enable it to receive a trigger. To enable the trigger system for one transient event use:

   INITiate:IMMediate:SEQuence1

6. To enable the transient system indefinitely use:

   INITiate:CONTinuous:SEQuence1 ON

   Trigger the transient. This is described in detail under "Triggering Output Changes".

Example

The following example programs a voltage dropout for 2 cycles of a 120 volt, 60 Hz output. The dropout begins at the positive peak of the output voltage waveform (90 degrees phase) and is triggered by IEEE-488 bus trigger.

*RST	Begin at power-on state
VOLT 120	Set initial output voltage (immediate-level)
FREQ 60	Set initial output frequency
OUTP ON	Enable the output
VOLT:MODE PULS	Enable output to generate pulses when triggered
VOLT:TRIG 0	Set the voltage dropout (triggered level)
PULS:WIDT .03333	Set pulse width for 2 periods
TRIG:SOUR BUS	Respond to IEEE-488 bus triggers
TRIG:SYNC:SOUR PHAS	Synchronize triggers to internal phase reference
TRIG:SYNC:PHAS 90	Sets internal phase reference point to 90 degrees
INIT:SEQ1	Set to Wait-for-trigger state
<device trigger>	Send the IEEE-488 bus trigger

6.6 List Transients

List mode lets you generate complex sequences of output changes with rapid, precise timing, which may be synchronized with internal or external signals. Each function that can participate in output transients can also have an associated list of values that specify its output at each list point.

You can program up to 100 settings (or points) in the list, the time interval (dwell) that each setting is maintained, the number of times that the list will be executed, and how the settings change in response to triggers.

All list point data is stored in nonvolatile memory. This means that the programmed data for any list function will be retained when the AC source is turned off.

Lists are paced by a separate list of dwell times which define the duration of each output setting. Therefore, each of the up to 100 list points has an associated dwell time, which specifies the time (in seconds) that the output remain at that setting before moving on to the next setting.

The following procedure shows how to generate a simple list of voltage and frequency changes:

1. Set the mode of each function that will participate in the output sequence to LIST. For example:

   VOLTage:MODE LIST

   FREQuency:MODE LIST

2. Program the list of output values for each function. The list commands take a comma-separated list of arguments. The order in which the arguments are given determines the sequence in which the values will be output. For example, to cycle the voltage through a sequence that includes nominal line, high line, and low line, a list may include the following values:

   LIST:VOLTage 120, 132, 108, 120, 132, 108, 120, 132, 108

   You can specify lists for more than one function. For example, to synchronize the previous voltage list with another list that varies the output frequency from nominal, to high, to low, the lists may include the following values:

   LIST:VOLTage 120, 132, 108, 120, 132, 108, 120, 132, 108

   LIST:FREQuency 60, 60, 60, 63, 63, 63, 57, 57, 57

   All lists must have the same number of data values or points, or an error will occur when the transient system that starts the sequence is later initiated. The exception is when a list has only one item or point. In this case the single-item list is treated as if it had the same number of points as the other lists, with all values being equal to the one item. For example:

   LIST:VOLTage 110, 120, 130;FREQuency 60

   is the same as:

   LIST:VOLTage 110, 120, 130

   LIST:FREQuency 60, 60, 60

3. Determine the time interval that the output remains at each level or point in the list before it advances to the next point. The time is specified in seconds. For example, to specify five dwell intervals, use:

   LIST:DWELI 1, 1.5, 2, 2.5, 3

   The number of dwell points must equal the number of output points. If a dwell list has only one value, that value will be applied to all points in the output list.

4. Determine the number of times the list is repeated before it completes. For example, to repeat a list 10 times use:

   LIST:COUNt 10

   Entering INFinity makes the list repeat indefinitely. At *RST, the count is set to 1.

5. Determines how the list sequencing responds to triggers. For a closely controlled sequence of output levels, you can use a dwell-paced list. To cause the list to be paced by dwell time use:

   LIST:STEP AUTO

   As each dwell time elapses, the next point is immediately output. This is the *RST setting.

   If you need the output to closely follow asynchronous events, then a trigger-paced list is more appropriate. In a trigger-paced list, the list advances one point for each trigger received. To enable trigger-paced lists use:

   LIST:STEP ONCE

   The dwell time associated with each point determines the minimum time that the output remains at that point. If a trigger is received before the previous dwell time completes, the trigger is ignored. Therefore, to ensure that no triggers are lost, program the dwell time to zero.

6. Use the transient trigger system to trigger the list. This is described in detail under "Triggering Output Changes" (Section 6.7).

6.7 Triggering Output Changes

The AC source has two independent trigger systems. One is used for generating output changes, and the other is used for triggering measurements. This section describes the output trigger system. The measurement trigger system is described under "Triggering Measurements".

The basic components of both systems are the same, but the transient trigger system has additional delay and phase synchronization features that the measurement trigger system does not have.

The following transient trigger sources can be selected:

IMMediate	generates a trigger when the trigger system is initiated.
BUS	selects IEEE-488 bus triggers.
EXTernal	selects the external Trigger In1 SMA connector.

6.7.1 SCPI Triggering Nomenclature

In SCPI terms, trigger systems are called sequences. When more than one trigger system exists, they are differentiated by naming them SEQuence1, SEQuence2, ... etc. In the AC source, SEQuence1 is the transient trigger system, SEQuence2 is the phase synchronization trigger system, and SEQuence3 is the measurement trigger system.

The AC source uses aliases with more descriptive names for these sequences. These aliases can be used instead of the sequence forms.

Sequence Form	Alias
SEQuence1	TRANsient
SEQuence2	SYNChronize
SEQuence3	ACQuire

6.7.2 Output Trigger System Model

Figure 6-2 is a model of the output trigger system. The rectangular boxes represent states. The arrows show the transitions between states. These are labeled with the input or event that causes the transition to occur.

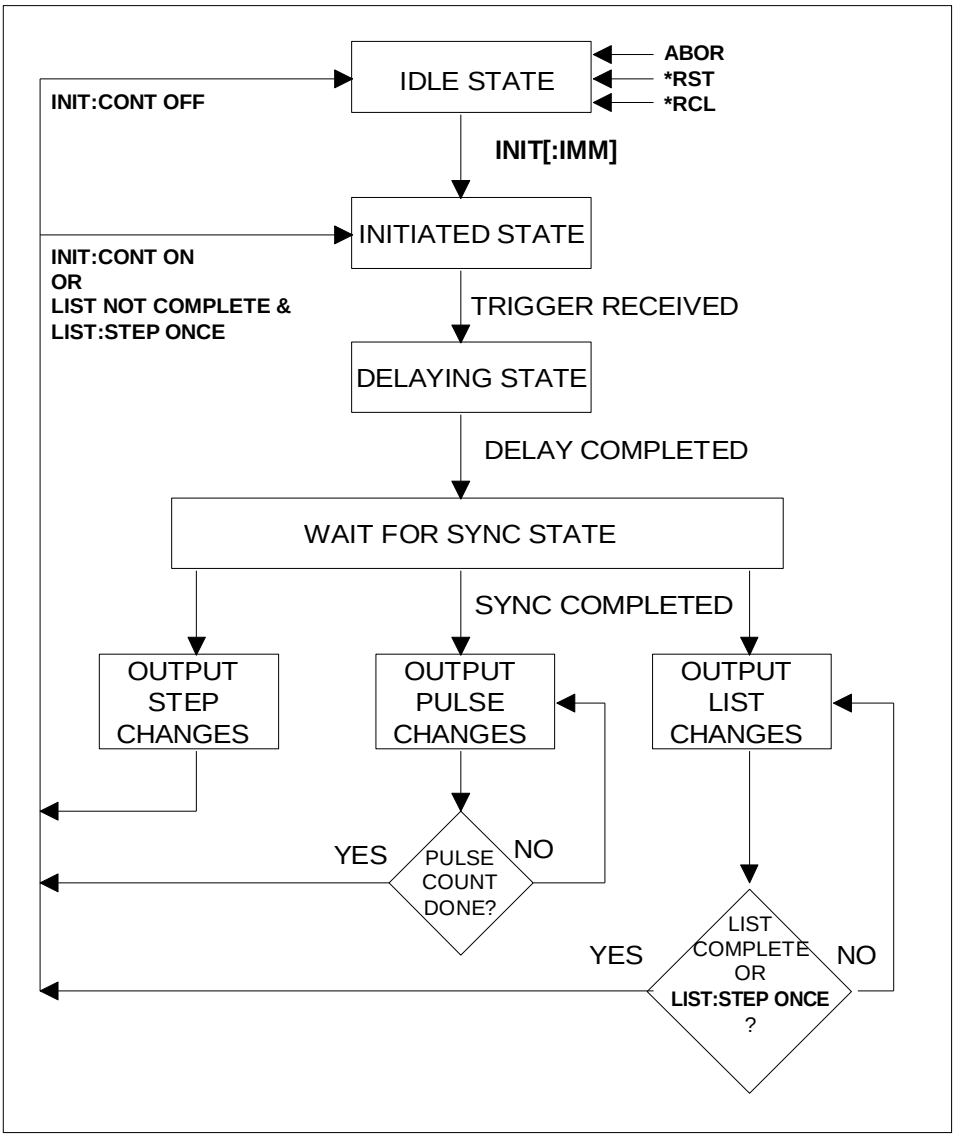

Figure 6-2: Model of output trigger system.

6.7.3 Initiating the Output Trigger System

When the AC source is turned on, the trigger subsystem is in the idle state. In this state, the trigger subsystem ignores all triggers. Sending the following commands at any time returns the trigger system to the Idle state:

ABORt **RST* **RCL*

The INITiate commands move the trigger system from the Idle state to the Initiated state. This enables the AC source to receive triggers. To initiate for a single triggered action, use:

INITiate:IMMediate:SEQuence1 or

INITiate:IMMediate:NAME TRANsient

After a trigger is received and the action completes, the trigger system will return to the Idle state. Thus it will be necessary to initiate the system each time a triggered action is desired. To keep a trigger system initiated for multiple actions without having to send an initiate command for each trigger, use:

INITiate:CONTinuous:SEQuence1 ON or

INITiate:CONTinuous:NAME TRANsient, ON

The SEQuence2 (or SYNChronize) trigger sequence does not have an INITiate command. It is always initiated.

6.7.4 Selecting the Output Trigger Source

The trigger system is waiting for a trigger signal in the Initiated state. Before you generate a trigger, you must select a trigger source. To select the external Trigger In1 SMA as the source, use:

TRIGger:SEQuence1:SOURce EXTernal or

TRIGger:TRANsient:SOURce EXTernal

To select IEEE-488 bus triggers (group execute trigger, device trigger, or *TRG command), use:

TRIGger:SEQuence1:SOURce BUS or

TRIGger:TRANsient:SOURce BUS

To select a trigger source that is always true, use:

TRIGger:SEQuence1:SOURce IMMediate or

TRIGger:TRANsient:SOURce IMMediate

The immediate source can be combined with INITiate:CONTinuous:SEQuence1 ON to generate repetitive output transients. A transition from the Initiated state to the Delay state is made when the trigger signal is received.

6.7.5 Specifying a Trigger Delay

A time delay can be programmed between the receipt of the trigger signal and the start of the output transient. At *RST the trigger delay is set to 0, which means that there is no delay. To program a delay, use:

TRIGger:SEQuence1:DELay .01 or

TRIGger:TRANsient:DELay .01

which sets a delay time of 10 milliseconds. A trigger delay can only be programmed for SEQuence1 (or TRANsient) triggers. When the programmed trigger delay has elapsed, the trigger system transitions from the Delay state to the Wait-for-sync state.

6.7.6 Synchronizing Output Changes to a Reference Phase Angle

An output transient normally occurs immediately when the trigger signal is received, or after the delay has expired if a trigger delay has been set. For some applications it is desirable that the transient is synchronized with a particular phase of the output waveform such as the zero crossing point or the positive peak.

To synchronize the start of a transient with a particular phase of the internal phase reference, you must select PHASE as the trigger source. Use:

TRIGger:SEQuence2:SOURce PHASe or

TRIGger:SYNChronize:SOURce PHASe

To select the desired phase, use:

TRIGger:SEQuence2:PHASe 90 or

TRIGger:SYNChronize:PHASe 90

which specifies the 90 degree phase angle of the internal phase reference as the point where the transient begins.

To turn off transient phase synchronization, use:

TRIGger:SYNChronous:SOURce IMMediate

When IMMediate is selected, the trigger system transitions through the Delaying and Wait-for-sync states and goes directly to the Output state. This is the parameter selected at *RST.

6.7.7 Generating Triggers

Providing that you have specified the appropriate trigger source, you can generate triggers as follows:

Single Triggers

- By sending one of the following over the IEEE-488:
  - TRIGger:IMMediate
  - *TRG
  - a group execute trigger
- By applying a signal with a high-to-low transition to the Trig In1 SMA connector.

Continuous Triggers

- By sending the following commands over the IEEE-488:

  TRIGger:SEQuence1:SOURce IMMediate

  INITiate:CONTinuous:SEQuence1 ON

When the trigger system enters the Output Change state upon receipt of a trigger (see Figure 6-2), the triggered functions are set to their programmed trigger levels. When the triggered actions are completed, the trigger system returns to the Idle state.

6.7.8 Specifying a Dwell Time for Each List Point

Each voltage and current list point has an associated dwell time specified by:

LIST:DWELl <n> {,<n>}

where <n> specifies the dwell time in seconds. The number of dwell points must equal the number of output points. If a dwell list has only one value, that value will be applied to all points in the output list. After each new output level or point is programmed, the output remains at that point in the list for the programmed dwell interval before the list advances to the next point. Only an ABORt command can transfer the system out of the Dwelling state.

At the end of the dwell interval, the transition to the next state depends on whether or not the list has completed its sequencing and the state of the LIST:STEP command (see Figure 6-2).

- If the list is completed, the trigger system returns to the Idle state.
- If the list is not completed, then the system reacts as follows:

  LIST:STEP ONCE programs the trigger system to return to the Initiated state to wait for the next trigger.

  LIST:STEP AUTO programs the trigger system to immediately execute the next list point.

6.8 Making Measurements

The AC source has the capability to return a number of current, voltage, and power measurements. When the AC source is turned on, it is continuously sampling the instantaneous output voltage and current for several output cycles and writing the results into a buffer. The buffer holds 4096 voltage and current data points.

The AC source uses the data from the voltage and current buffer to calculate the requested measurement information. Data in the voltage and current buffers is always re-acquired for subsequent measurement requests. There are two ways to make measurements:

- Use the MEASure commands to immediately start acquiring new voltage and current data, and return measurement calculations from this data as soon as the buffer is full. This is the easiest way to make measurements, since it requires no explicit trigger programming.
- Use an acquisition trigger to acquire the voltage and current data from the buffer. Then use the FETCh commands to return calculations from the data that was retrieved by the acquisition trigger. This method gives you the flexibility to synchronize the data acquisition with an external signal. FETCh commands do not trigger the acquisition of new measurement data, but they can be used to return many different calculations from the data that was retrieved by the acquisition trigger.

Making triggered measurements with the acquisition trigger system is discussed under "Triggering Measurements".

Note **For each MEASure form of the query, there is a corresponding query that begins with the header FETCh. FETCh queries perform the same calculation as their MEASure counterparts, but do not cause new data to be acquired. Data acquired by an explicit trigger or a previously programmed MEASure command are used.**

6.8.1 Voltage and Current Measurements

To read the sum of ac and dc components of the rms voltage or current, use:

MEASure:VOLTage:ACDC? or

MEASure:CURRent:ACDC?

To measure the dc voltage or current components, use:

MEASure:VOLTage:DC? or

MEASure:CURRent:DC?

To measure the maximum current amplitude and the current crest factor, use:

MEASure:CURRent:AMPLitude:MAXimum?

MEASure:CURRent:CREStfactor?

6.8.2 Power Measurements

The MEASure and FETCh queries can return real, apparent, and reactive power measurements as well as dc power and power factor using the following commands:

MEASure:POWer:AC:APParent?	measures the ac component of apparent power in VA
MEASure:POWer:AC:REACtive?	measures the reactive power
MEASure:POWer:AC:REAL?	measures the in-phase component of power in watts
MEASure:POWer:AC:PFACtor?	returns the output power factor
MEASure:POWer:AC:TOTal?	measures the total real power being sourced
MEASure:POWer:DC?	measures the dc component of power

6.8.3 Harmonic Measurements

The MEASure and FETCh queries can return the amplitude and phase of up to the 50th harmonic of voltage and current. They can also return the total harmonic distortion in the output voltage or current. For example, to return readings for an individual harmonic component, use the following commands:

MEASure:CURRent:HARMonic:AMPLitude? <harmonic number>

MEASure:CURRent:HARMonic:PHASe? <harmonic number>

MEASure:VOLTage:HARMonic:AMPLitude? <harmonic number>

MEASure:VOLTage:HARMonic:PHASe? <harmonic number>

Harmonic numbers are related to the programmed frequency of output voltage. Queries sent with an argument of 0 return the dc component. An argument of 1 indicates the fundamental frequency, 2 indicates the second harmonic, 3 indicates the third, and so on.

The maximum harmonic component that can be read is limited by the fundamental measurement bandwidth, which is 16 kHz. An error is generated if a query is sent for a harmonic that has a frequency greater than 16 kHz. To return all the harmonic components with a single query, use the following commands:

MEASure:ARRay:CURRent:HARMonic:AMPLitude?

MEASure:ARRay:CURRent:HARMonic:PHASe?

MEASure:ARRay:VOLTage:HARMonic:AMPLitude?

MEASure:ARRay:VOLTage:HARMonic:PHASe?

These queries always return 51 data values, from the dc component up to the 50th harmonic. Any harmonics that represent frequencies greater than 16 kHz are returned as the value 0. To return the percentage of total harmonic distortion in the output voltage or current, use the following commands:

MEASure:CURRent:HARMonic:THD?

MEASure:VOLTage:HARMonic:THD?

6.8.4 Simultaneous Output Phase Measurements

You can return simultaneous measurements from all output phases of the source in the three phase mode using the FETCh query. Unlike MEASure queries, FETCh queries do not trigger the acquisition of new data when they are executed. First, you must initiate the measurement trigger system and generate a measurement trigger as explained in the following section "Triggering Measurements". When the measurement data has been acquired by the voltage and current data buffers for each output phase, use INSTrument:NSELect to select each phase, and FETCh to return the specified measurement data. The following commands return rms voltage:

INSTrument:NSELect 1

FETCh:VOLTage:AC?

INSTrument:NSELect 2

FETCh:VOLTage:AC?

INSTrument:NSELect 3

FETCh:VOLTage:AC?

6.8.5 Returning Voltage and Current Data From the Data Buffer

The MEASure and FETCh queries can also return all 4096 data values of the instantaneous voltage and current buffers. These are:

MEASure:ARRay:CURRent?

MEASure:ARRay:VOLTage?

6.8.6 Triggering Measurements

You can use the data acquisition trigger system to synchronize the timing of the voltage and current data acquisition with an external trigger source. Then use the FETCh commands to return different calculations from the data acquired by the measurement trigger.

The following measurement trigger sources can be selected:

BUS	selects IEEE-488 bus triggers.
EXTernal	selects the external Trigger In1 SMA connector.
TTLTrg	selects the signal driving the Trigger Out1 SMA connector.

6.8.7 SCPI Measurement Triggering Nomenclature

As previously explained under "Triggering Output Changes", the AC source uses the following sequence name and alias for the measurement trigger system. This alias can be used instead of the sequence form.

Sequence Form	Alias
SEQuence3	ACQuire

6.8.8 Measurement Trigger System Model

Figure 6-3 is a model of the measurement trigger system. The rectangular boxes represent states. The arrows show the transitions between states. These are labeled with the input or event that causes the transition to occur.

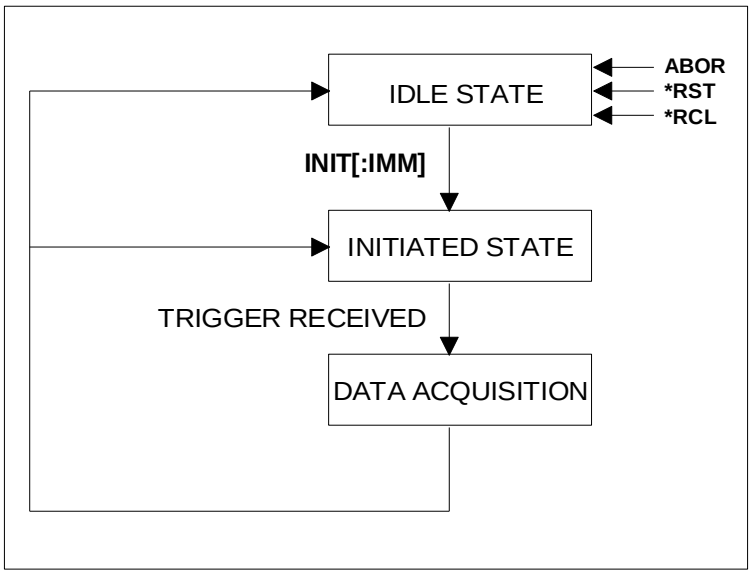

Figure 6-3: Model of Measurement triggers.

6.8.9 Initiating the Measurement Trigger System

When the AC source is turned on, the trigger system is in the idle state. In this state, the trigger system ignores all triggers. Sending the following commands at any time returns the trigger system to the Idle state:

ABORt **RST* **RCL*

The INITiate commands move the trigger system from the Idle state to the Initiated state. This enables the AC source to receive triggers. To initiate for a measurement trigger, use:

INITiate:IMMediate:SEQuence3 or

INITiate:IMMediate:NAME ACQuire

After a trigger is received and the data acquisition completes, the trigger system will return to the Idle state. Thus it will be necessary to initiate the system each time a triggered acquisition is desired.

Note: You cannot initiate measurement triggers continuously. Otherwise, the measurement data in the data buffer would continuously be overwritten by each triggered measurement.

6.8.10 Selecting the Measurement Trigger Source

The trigger system is waiting for a trigger signal in the Initiated state. Before you generate a trigger, you must select a trigger source. To select the external Trigger In1 SMA as the source, use:

TRIGger:SEQuence3:SOURce EXTernal or

TRIGger:ACQuire:SOURce EXTernal

To select IEEE-488 bus triggers (group execute trigger, device trigger, or *TRG command), use:

TRIGger:SEQuence3:SOURce BUS or

TRIGger:ACQuire:SOURce BUS

To select the signal driving the Trigger Out1 SMA connector, use:

TRIGger:SEQuence3:SOURce TTLTrg or

TRIGger:ACQuire:SOURce TTLTrg

6.8.11 Generating Measurement Triggers

Providing that you have specified the appropriate trigger source, you can generate triggers as follows:

- By sending one of the following over the IEEE-488:
  - TRIGger:SEQuence3:IMMediate
  - TRIGger:ACQuire:IMMediate
  - *TRG
  - a group execute trigger
- By applying a signal with a high-to-low transition to the Trig In1 SMA connector.
- By generating an output transient that causes the Trig Out1 SMA connector to output a pulse.

6.8.12 Using the DFI Output to Indicate Error Conditions

The Discrete Fault Indicator output on the rear of the Lx\Ls Series unit can be used to provide a control or status signal to an external device. The following example illustrates the use of the DFI output to signal a current limit fault condition.

The DFI output is the floating collector and emitter of an opto isolator. As such, these have to be terminated somehow. One possible way to terminate this signal is to tie FLT high to INH high and FLT low to INH low; this works as long as you are not using the INH inputs.

Next, the OCP detector has be to activated by sending the following command:

```
CURR:PROT:STATE ON
```

To enable the DFI circuit, send:

```
OUTP:DFI:SOURCE QUES
```

OUTP:DFI:STATE ON

To enable the OCP signal to get to the STAT:QUES register, send:

STAT:QUES:PTR 2

STAT:QUES:ENAB 2

After sending these commands, the DFI output will indicate when the RMS OCP goes active. Note that when an OCP fault happens, the PROT lamp comes on indicating that one has to send OUTP:PROT:CLEAR to re-enable the source once the over current condition is removed. Note also that the DFI output will stay low until the questionable status register (STAT:QUES?) is read.

6.9 Controlling the Instantaneous Voltage and Current Data Buffers

Measurements taken by the Lx\Ls Series measurement systems are based on a digital representation of the voltage and current waveforms. Both waveforms are digitized with 24 bits of amplitude resolution and down to 10.4 or 31.25 μsec of time resolution. (96 Ks/sec real-time sampling rate in single-phase / three-phase mode). The available memory depth to hold this information is 4K (4096 samples) for each waveform. This section covers the SCPI commands that can be used to control the sampling rate and the position of the trigger point in the 4K deep data buffer.

6.9.1 VB6 Sample: Converting IEEE format trace data to floating point

Converting the received IEEE floating point format waveform data to a single precision floating point value can be accomplished using the following sample routine:

```
Public Function StringToIEEEFloat(ByVal sData As String, ByVal bAsciiMode As Boolean) As
Single
'==============================================================
'bAsciiMode flag is used if data is received as 8 ascii chars
'representing Hex 0-9,A-F. If bAsciiMode flag is false, then
'data is process as 4 char representing a byte each. Ascii
'mode is needed for DCBS windows
'==============================================================
  Dim i         As Integer
  Dim j         As Integer
  Dim iChar     As Integer
  Dim expo      As Long
  Dim mantisse  As Long
  Dim expo_val  As Variant
  Dim mant_f    As Single
  Dim c(3)      As Long    'Must use 32 bit integers to allow for
                      'intermediate result of 24 bit shift
  Dim sign      As Boolean
'==============================================================
Const MANT_MAX = &H7FFFFF
Const EXPO_MAX = 2 ^ 126
'==============================================================

On Error GoTo FloatConvError
  If bAsciiMode Then
    'Retrieve ASC values from eight hex byte input data
    sData = UCase(sData)
    For i = 0 To 3
      c(i) = 0
      For j = 0 To 1
        iChar = AscB(Mid$(sData, i * 2 + j + 1, 1)) - 48
        If iChar > 9 Then iChar = iChar - 7
        c(i) = c(i) * 16 * j + iChar
      Next j
    Next i
  Else
    'Retrieve ASC values from four byte input data
    'Note: Don't use ASCB or ASCW functions as results will differ
```

```
    'based on character sets, even on non DCBS Windows
    'Retrieve ASC values from four byte input data
    For i = 0 To 3
      c(i) = Asc(Mid$(sData, i + 1, 1))
    Next i
  End If
  'Get sign bit
  sign = ((c(0) And &H80) = &H80)
  'Get exponent value less sign bit
  expo = (c(0) And &H7F) * 2
  'Pick up exponent sign
  If (c(1) And &H80) = &H80 Then expo = expo Or 1
  'get data less exponent sign bit
  c(1) = c(1) And &H7F
  mantisse = c(1) * &H10000 + c(2) * &H100 + c(3)
  mant_f = mantisse / MANT_MAX
  'Process exponent
  If (expo <> 0) And (expo <> &HFF) Then
    expo = expo - 127
    mant_f = mant_f + 1
    expo_val = 2 ^ Abs(expo)
    If (expo > 0) Then mant_f = mant_f * expo_val
    If (expo < 0) Then mant_f = mant_f / expo_val
  Else
    If (mant_f <> 0) Then
      If expo = 0 Then
        mant_f = mant_f / EXPO_MAX
      Else
        mant_f = mant_f * EXPO_MAX
      End If
    End If
  End If
  'Append number sign and return value
  If sign Then mant_f = -mant_f
  StringToIEEEFloat = mant_f
Exit Function
'==============================================================

FloatConvError:
  'Conversion errors are truncated to zero
  StringToIEEEFloat = 0
  Exit Function

End Function
```

6.9.2 Varying the Voltage and Current Sampling Rate

At *RST, the output voltage and current sampling rate is 96 kHz (period = 10.4 µsec). This means that it takes about 43 milliseconds to fill up 4096 data points in the voltage and current data buffers with the information required to make a measurement calculation. You can vary this data sampling rate with:

SENSe:SWEep:TINTerval <sample period>

The sample period can be programmed from a minimum period of 10 microseconds (the default), to 100 microseconds in 10 microsecond steps.

6.9.3 Pre-event and Post-event Triggering

The range for this offset is 4096 to 2E9 points. As shown in the following figure, when the offset is negative, the values at the beginning of the data record represent samples taken prior to the trigger. When the value is 0, all of the values are taken after the trigger. Values greater than zero can be used to program a delay time from the receipt of the trigger until the data points that are entered into the buffer are valid.

(Delay time = Offset × Sample period)

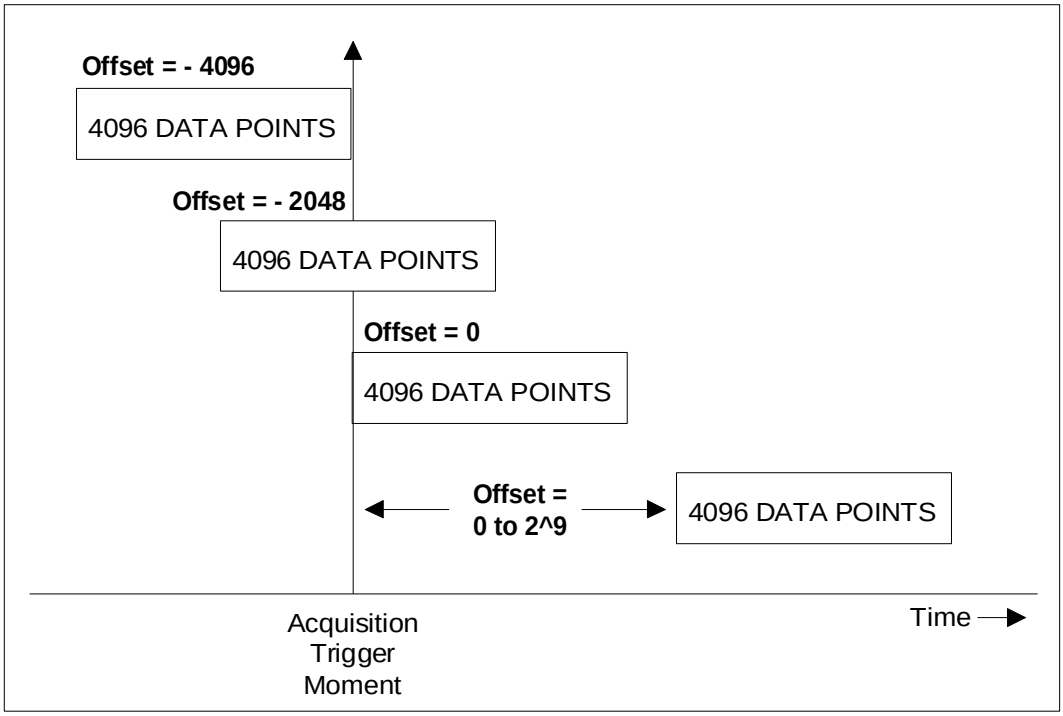

Figure 6-4: Pre- and Post Event Triggering.

6.10 Downloading Arbitrary Waveforms

The Lx Series supports the use of arbitrary waveforms. The same is true for the Ls Series if the -ADV option is installed. Up to 50 user defined waveforms can be downloaded to the Lx by assigning a user defined name of up to 12 characters long and sending the formatted waveform data over the bus. File names longer than 12 characters will be truncated on the WAVEFORM LCD display and make it difficult to select the right waveform from the front panel, especially if the first 12 characters are the same.

Note: Avoid using names that conflict with standard waveforms such as SIN, SINE, CLIPPED, SQUARE.

Once downloaded, user waveforms can be recalled from either the front panel using the MENU key or over the bus using the FUNCtion command. See section **Error! Reference source not found.**.

6.10.1 Waveform Record Data Format

The total number of datapoints required to define a waveform register is 1024. Each data points should be scaled between –1.000 and +1.000. If scaled differently, the Lx/Ls controller will automatically scale the data received. The TRAC:DATA command is used to send the data in comma delimited form to the power source controller.

The datapoints correspond to a single waveform period. When selected for output, the waveform register will be output at the programmed frequency. Each register should be set up to conain a single period of the desired output waveform only. It is important to ensure that the start and end point of the waveform data matches (equal value). If not, a discontinuity will occur each time the register repeats at the output while selected.

6.10.2 Download Sample

The Visual Basic 6 code sample below provides a simple illustration on how to download a user defined waveform. The data points are passed in a single dimension array sWaveformPoints of type Single. (single precision floating point).

Note: User defined waveforms are retained in non-volatile memory. The process of writing to this memory takes a certain amount of time. Allow a 500 msec delay between sending the last data value and sending the next bus command.

Sample code:

```
Global sWaveformPoints(1023) As Single       'Waveform datapoints, base 0

Private Sub Download(ByVal strWaveName As String, ByVal iPoints As Integer, _
                     ByRef sBuffer() As Single)
'==============================================================================
'This procedure transfers a block of Data from the PC
'to the AC Source. The waveform name is passed as a parameter
'==============================================================================
Dim i As Integer
Dim strCmd As String
'==============================================================================
On Error GoTo XFRArbError
    'Define catalog entry user defined name (max length is 12 char)
    strCmd = "TRAC:DEF " + Left$(strWaveName,12)
    Send gl_iNIBrdId, AC_Adr, s, NLend
    'Send data buffer
```

```
    strCmd =  = "TRAC:DATA " + Left$(strWaveName,12)
    'Assemble data buffer string command
    For i = 0 to iPoints -1
      strCmd = strCmd + "," + FrmOut$(sBuffer(i), "0.0###")   'Format 4 digits
    Next i
    Send gl_iNIBrdId, AC_Adr, strCmd, Nlend
    'Insert 500 msec delay to allow update of Flash memory
    msec_delay 500
    Exit Sub

XFRArbError:
    MsgBox Error(Err), vbOKOnly + vbInformation, PROGNAME
End Sub
```

6.11 Command Processing Times

Most commands are processed immediately after they are received in the order they have been received. Some commands however take a long time to complete. During this time, the power source may not be able to accept additional commands. This issue must be considered when developing application programs. In situations like this, time must be allowed through a time delay or by interfacing to other instruments in the test system while the power source is allowed to finish.

The *OPC 1 and *OPC? Commands can be used to determine if a command has been completed. However, some commands will not accept the *OPC? Query either if the processor is busy. In this case, a delay must be allowed before the *OPC? Query or the next command is send.

The following table lists those commands and their required processing times for reference.

Command	Processing Time	Comment
*SAV n	100 msec	Save settings and transient list data to non volatile memory. Flash memory access times are longer.
TRAC:DATA	500 msec	Save waveform data to non volatile memory. Flash memory access times are longer.
OUTP	150 msec	The delay for the output relay is active only when closing the relay.
VOLT:RANG	Default: 100 msec	This output relay and range change relay settling time delays can be set to value up to 1000 msec using the PONS:REL:HOLD command. See section **Error! Reference source not found.**, "**Error! Reference source not found.**".
SYST:CONF:NOUT	100 msec	Phase mode change. Available on Lx or Ls with –MODE option. Switching between single or three phase output configuration requires reinitialization of controller.
*RST	1 sec	Softboot reset of controller requires reinitialization.
*TST?	10 sec	Selftest execution time.
CAL:XXXX	300 msec	Save output coeficient calibration data to non volatile memory. Flash memory access times are longer.
CAL:SAVE	300 msec	Save calibration data to non volatile memory. Flash memory access times are longer.

Table 6-1: Command Processing Times.

7. Programming the Status and Event Registers

You can use status register programming to determine the operating condition of the AC source at any time. For example, you may program the AC source to generate an interrupt (assert SRQ) when an event such as a current limit occurs. When the interrupt occurs, your program can then act on the event in the appropriate fashion.

Figure 7-1 shows the status register structure of the AC Source. Table 7-2 defines the status bits. The Standard Event, Status Byte, and Service Request Enable registers and the Output Queue perform standard IEEE-488 functions as defined in the IEEE 488.2 Standard Digital Interface for Programmable Instrumentation. The Operation Status, Questionable Status, and Questionable Instrument Isummary Status registers implement functions that are specific to the AC source.

7.1 Power-On Conditions

Refer to the *RST command description in chapter 4, Table 5-2 for the power-on conditions of the status registers.

7.2 Operation Status Group

The Operation Status registers record signals that occur during normal operation. The group consists of the following registers:

Register	Command	Description
Condition	STAT:OPER:COND?	A register that holds real-time status of the circuits being monitored. It is a read-only register.
PTR Filter	STAT:OPER:PTR <n>	A positive transition filter that functions as described under STAT:OPER:NTR|PTR commands in chapter 4. It is a read/write register.
NTR Filter	STAT:OPER:NTR <n>	A negative transition filter that functions as described under STAT:OPER:NTR|PTR commands in chapter 4. It is a read/write register.
Event	STAT:OPER:EVEN?	A register that latches any condition that is passed through the PTR or NTR filters. It is a read-only register that is cleared when read.
Enable	STAT:OPER:ENAB <n>	A register that functions as a mask for enabling specific bits from the Event register. It is a read/write register.

Table 7-1: Operation Status registers

The outputs of the Operation Status register group are logically-ORed into the OPER(ation) summary bit (7) of the Status Byte register.

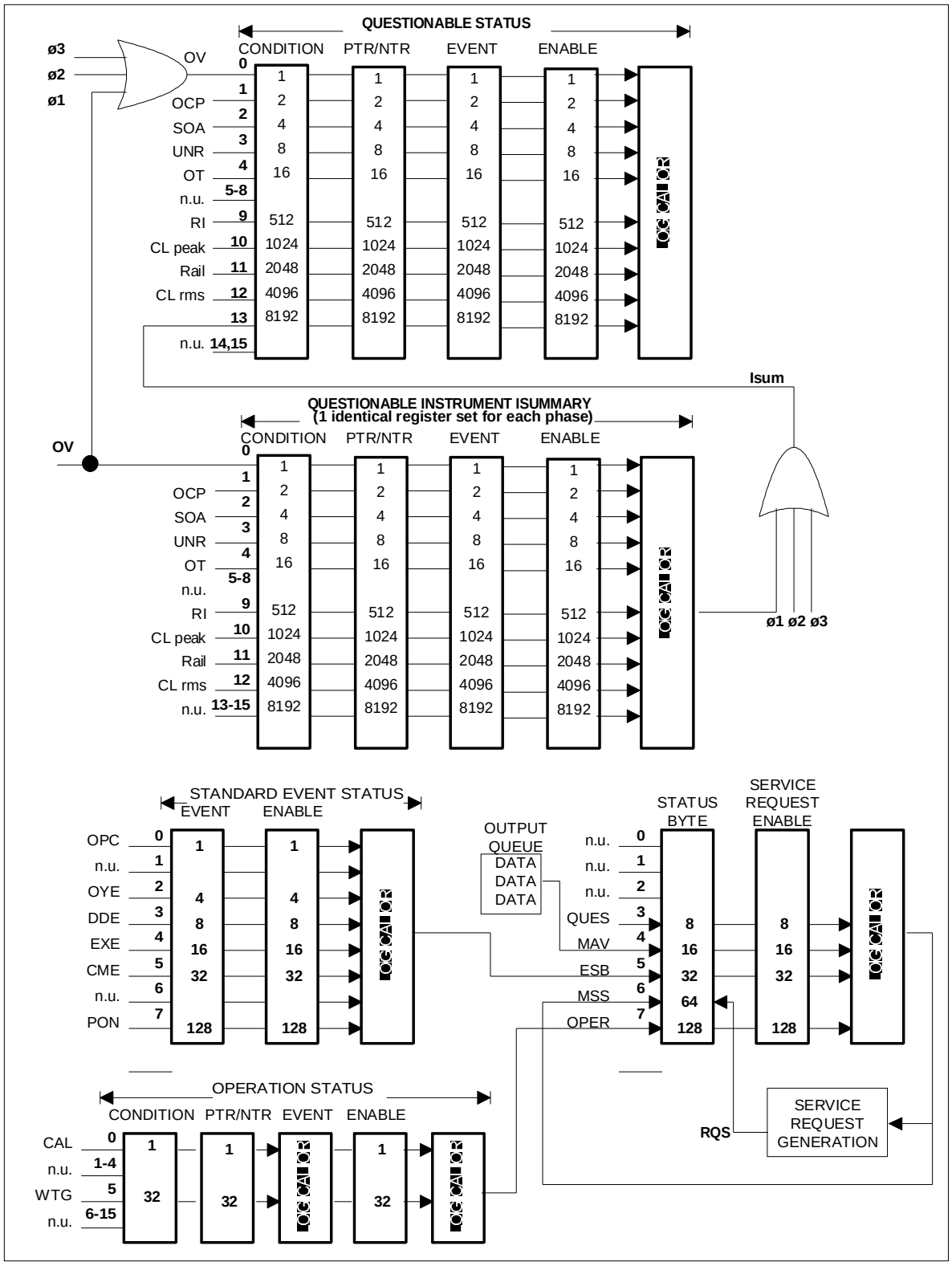

Figure 7-1: Status Register Model.

Bit	Signal	Meaning
		Operation Status Group
0	CAL	Interface is computing new cal constants
5	WTG	Interface is waiting for a trigger
8	CV	The output voltage is regulated
		Questionable and Questionable Instrument Isummary Status Groups
0	OV	The overvoltage protection circuit has tripped
1	OCP	The overcurrent protection circuit has tripped
3	UNR	The output is unregulated
4	TO	An overtemperature condition has occurred
9	RI	The remote inhibit state is active
11	Rail	Loss of input phase voltage detected
12	CLrms	The rms current limit circuit is active
13	Isum	Summary of QUES:INST:ISUM registers
		Standard Event Status Group
0	OPC	Operation complete
2	QYE	Query error
3	DDE	Device-dependent error
4	EXE	Execution error
5	CME	Command error
7	PON	Power-on
		Status Byte and Service Request Enable Registers
3	QUES	Questionable status summary bit
4	MAV	Message Available summary bit
5	ESB	Event Status Summary bit
6	MSS	Master Status Summary bit
	RQS	Request Service bit
7	OPER	Operation status summary bit

Table 7-2: Bit Configurations of Status Registers

7.3 Questionable Status Group

The Questionable Status registers record signals that indicate abnormal operation of the AC source. As shown in Figure 7-1, the group consists of the same type of registers as the Status Operation group.

Register	Command	Description
Condition	STAT:QUES:COND?	A register that holds real-time status of the circuits being monitored. It is a read-only register.
PTR Filter	STAT:QUES:PTR <n>	A positive transition filter that functions as described under STAT:QUES:NTR|PTR commands in chapter 4. It is a read/write register.
NTR Filter	STAT:QUES:NTR <n>	A negative transition filter that functions as described under STAT:QUES:NTR|PTR commands in chapter 4. It is a read/write register.
Event	STAT:QUES:EVEN?	A register that latches any condition that is passed through the PTR or NTR filters. It is a read-only register that is cleared when read.
Enable	STAT:QUES:ENAB <n>	A register that functions as a mask for enabling specific bits from the Event register. It is a read/write register.

Table 7-3: Questionable Status registers

The outputs of the Questionable Status group are logically-ORed into the QUEStionable summary bit (3) of the Status Byte register.

Note: If the AC source is in the three-phase mode, each signal that is fed into the Questionable Status Condition register is logically-ORed from three corresponding status signals that originate from each phase. Figure 7-1 illustrates this for the OV bit; the same illustration also applies to the other bits in the Condition register.

7.4 Questionable Instrument Isummary Status Group

Although only one group of Questionable Instrument Isummary Status registers is shown in Figure 7-1, there are actually three identical register groups. With the exception of bit 13, the register structure is the same as the Questionable Status group. These three register groups monitor the status signals of each individual phase of the three-phase AC source. To determine which phase of the AC source is currently selected, use:

INSTrument:NSELect?

To set or read the status registers of another phase, first use:

INSTrument:NSELect <n>

where <n> is the phase number. Then send the appropriate register commands.

Register	Command	Description
Condition	STAT:QUES:INST:ISUM:COND?	A register that holds real-time status of the circuits being monitored. It is a read-only register.
PTR Filter	STAT:QUES:INST:ISUM:PTR <n>	A positive transition filter that functions as described under STAT:QUES:INST:ISUM:NTR|PTR commands in chapter 4. It is a read/write register.
NTR Filter	STAT:QUES:INST:ISUM:NTR <n>	A negative transition filter that functions as described under STAT:QUES:INST:ISUM:NTR|PTR commands in chapter 4. It is a read/write register.
Event	STAT:QUES:INST:ISUM:EVEN?	A register that latches any condition that is passed through the PTR or NTR filters. It is a read-only register that is cleared when read.
Enable	STAT:QUES:INST:ISUM:ENAB <n>	A register that functions as a mask for enabling specific bits from the Event register. It is a read/write register.

Table 7-4: Questionable Instrument Isummary Status registers

The outputs of the Questionable Instrument Isummary Status group are logically-ORed into the Isum bit (13) of the Questionable Condition register.

7.5 Standard Event Status Group

This group consists of an Event register and an Enable register that are programmed by Common commands. The Standard Event register latches events relating to interface communication status (see Figure 7-1). It is a read-only register that is cleared when read.

The Standard Event Enable register functions similarly to the enable registers of the Operation and Questionable status groups.

Command	Action
*ESE	programs specific bits in the Standard Event Enable register.
*PSC ON	clears the Standard Event Enable register at power-on.
*ESR?	reads and clears the Standard Event register.

The PON (Power On) Bit

The PON bit in the Standard Event register is set whenever the AC source is turned on. The most common use for PON is to generate an SRQ at power-on following an unexpected loss of power. To do this, bit 7 of the Standard Event Enable register must be set so that a power-on event registers in the ESB (Standard Event Summary Bit). Bit 5 of the Service Request Enable register must be set to permit an SRQ to be generated, and *PSC OFF must be sent. The commands to accomplish these conditions are:

**PSC OFF*

**ESE 128*

**SRE 32*

7.6 Status Byte Register

This register summarizes the information from all other status groups as defined in the IEEE 488.2 Standard Digital Interface for Programmable Instrumentation. The bit configuration is shown in Table 5-3.

Command	Action
*STB?	reads the data in the register but does not clear it (returns MSS in bit 6)
serial poll	reads and clears the data in the register (returns RQS in bit 6)

The MSS Bit

This is a real-time (unlatched) summary of all Status Byte register bits that are enabled by the Service Request Enable register. MSS is set whenever the AC source has one or more reasons for requesting service. *STB? reads the MSS in bit position 6 of the response but does not clear any of the bits in the Status Byte register.

The RQS Bit

The RQS bit is a latched version of the MSS bit. Whenever the AC source requests service, it sets the SRQ interrupt line true and latches RQS into bit 6 of the Status Byte register. When the controller does a serial poll, RQS is cleared inside the register and returned in bit position 6 of the response. The remaining bits of the Status Byte register are not disturbed.

The MAV bit and Output Queue

The Output Queue is a first-in, first-out (FIFO) data register that stores AC source-to-controller messages until the controller reads them. Whenever the queue holds one or more bytes, it sets the MAV bit (bit 4) of the Status byte register.

7.7 Examples

7.7.1 Determining the Cause of a Service Interrupt

You can determine the reason for an SRQ by the following actions:

1. Determine which summary bits are active. Use

   **STB?* or

   serial poll

2. Read the corresponding Event register for each summary bit to determine which events caused the summary bit to be set. Use:

   STATus:QUEStionable:EVENt?

   STATus:OPERation:EVENt?

   ESR?

Note: When an Event register is read, it is cleared. This also clears the corresponding summary bit.

3. Remove the specific condition that caused the event. If this is not possible, the event may be disabled by programming the corresponding bit of the status group Enable register or NTR|PTR filter. A faster way to prevent the interrupt is to disable the service request by programming the appropriate bit of the Service Request Enable register.

7.7.2 Servicing Questionable Status Events

This example assumes you want a service request generated whenever the AC source's overvoltage, overcurrent, or overtemperature circuits have tripped. From Figure 7-1, note the required path for Questionable Status conditions at bits 0, 1, and 4 to generate a service request (RQS) at the Status Byte register. The required register programming is as follows:

1. Program the Questionable Status PTR register to allow a positive transition at bits 0, 1, or 4 to be latched into the Status Event register. Use:

   STATus:QUEStionable:PTR 19 (1 + 2 + 16 = 19)

2. Program the Questionable Status Enable register to allow the latched events to be summed into the QUES summary bit. Use:

   STATus:QUEStionable:ENABle 19

3. Program the Service Request Enable register to allow the QUES summary bit from the Status Byte register to generate RQS. Use:

   **SRE 8*

4. When you service the request, read the event register to determine which Questionable Status Event register bits are set and clear the register for the next event. Use:

   STATus:QUEStionable:EVENt?

7.7.3 Monitoring Both Phases of a Status Transition

You can monitor a status signal for both its positive and negative transitions. For example, to generate RQS when the AC source either enters the CLrms (rms current limit) condition or leaves that condition, program the Questionable Status PTR/NTR filter as follows:

STATus:QUEStionable:PTR 4096;NTR 4096

*STATus:QUEStionable:ENABle 4096;*SRE 8*

The PTR filter will cause the QUES summary bit to set RQS when CLrms occurs. When the controller subsequently reads the event register with STATus:QUEStionable:EVEN?, the register is cleared. When CLrms subsequently goes false, the NTR filter causes the QUES summary bit to again set RQS.

7.7.4 Programming the Trigger In and Trigger Out SMA connectors

The AC source has two SMA connectors labeled Trigger In1and Trigger Out2(see Figure 7-2). Refer to specifications in the User's Manual for the electrical parameters.

Trigger In1 SMA

This chassis-referenced digital input can be selected as a source for transient or measurement triggers. This allows an action to be synchronized to an external signal. The trigger is recognized on a high-to-low transition of the input signal. The minimum pulse width of the signal is 1 microsecond. To select the Trigger In connector as the trigger source, use:

TRIGger:SEQuence1:SOURce EXTernal or
TRIGger:TRANsient:SOURce EXTernal

TRIGger:SEQuence3:SOURce EXTernal or
TRIGger:ACQuire:SOURce EXTernal

Trigger Out1 SMA

This chassis-referenced digital output can be programmed to supply a pulse output at the leading or trailing edge of a step or pulse, or at the leading edge of any point in a list sequence. The output signal is nominally a 10 microsecond low-true pulse. To enable the Trigger Out connector, use:

OUTPut:TTLTrg:STATe ON

At *RST, the Trigger Out connector is off.

To select a trigger source for the Trigger Out connector, use:

OUTPut:TTLTrg:SOURce BOT | EOT | LIST

BOT -	specifies that the pulse is output at the beginning of a transient. This is the *RST setting.
EOT -	specifies that the pulse is output at the end of a transient.
LIST -	specifies that the pulse position is defined by the LIST:TTLTrg command.

You can also specify the Trigger Out connector as a trigger source for measurement trigger sequences. Use:

TRIGger:SEQuence3:SOURce TTLT or
TRIGger:ACQuire:SOURce TTLT

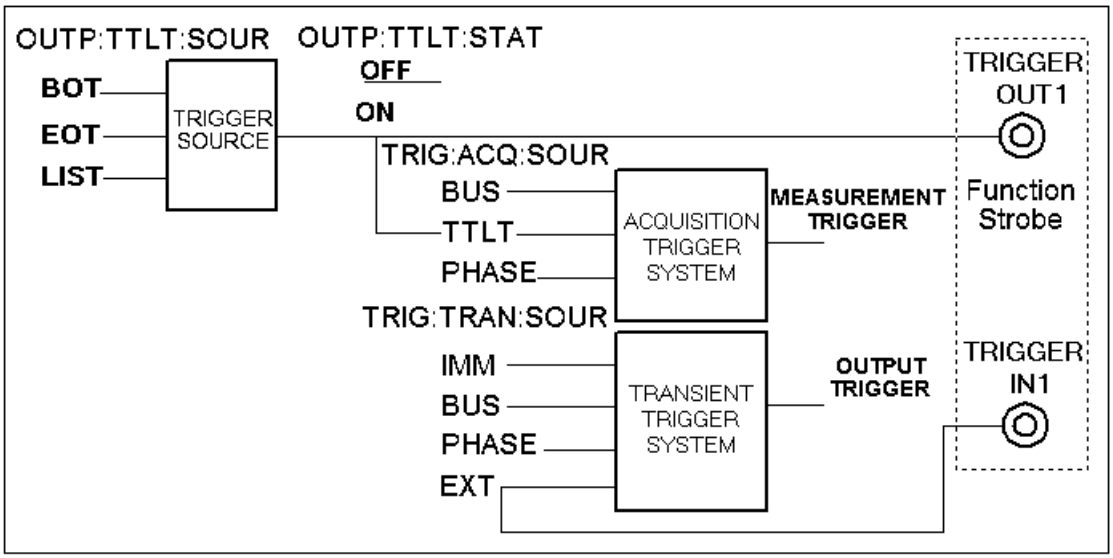

Figure 7-2: SMA Connector Trigger Model.

7.8 Remote Inhibit and Discrete Fault Indicator

The remote inhibit and discrete fault indicators are implemented through the respective INH and FLT connections on the rear panel. Refer to the User's Manual for the electrical parameters.

7.8.1 Remote Inhibit (RI)

Remote inhibit is an external, chassis-referenced logic signal routed through the rear panel INH connection, which allows an external device to signal a fault.

To select an operating modes for the remote inhibit signal, use:

OUTPut:RI:MODE LATChing | LIVE | OFF

LATChing	causes a low-true signal on the INH input to disable the output. The only way to clear the latch is by sending an OUTPut:PROTection:CLEAR command while the INH input is false.
LIVE	allows the RI input to disable the output in a non-latching manner. When INH is low true, the output is disabled. When INH is high, it has no effect on the output.
OFF	disables the INH input.

7.8.2 Discrete Fault Indicator (DFI)

The discrete fault indicator is a chassis-referenced, open-collector logic signal connected to the rear panel FLT connection, that can be used to signal external devices when a fault condition is detected. To select the internal fault source that drives this signal, use:

OUTPut:DFI:SOURce QUEStionable | OPERation | ESB | RQS | OFF

QUEStionable	selects the Questionable event summary bit (bit 3 of the Status Byte Register)
OPERation	selects the Operation Event summary bit (bit 7 of the Status Byte Register)
ESB	selects the Standard Event summary bit (bit 5 of the Status Byte Register)
RQS	selects the Request Service bit (bit 6 of the Status Byte Register)
OFF	selects no DFI source

To enable or disable the DFI output, use:

OUTPut:DFI:STATe ON | OFF

7.9 SCPI Command Completion

SCPI commands sent to the AC source are processed either sequentially or in parallel. Sequential commands finish execution before a subsequent command begins. Parallel commands allow other commands to begin executing while the parallel command is still executing. Commands that affect list and trigger actions are among the parallel commands.

The *WAI, *OPC, and *OPC? common commands provide different ways of indicating when all transmitted commands, including any parallel ones, have completed their operations. The syntax and parameters for these commands are described in chapter 4. Some practical considerations for using these commands are as follows:

*WAI	This prevents the AC source from processing subsequent commands until all pending operations are completed.
*OPC?	This places a 1 in the Output Queue when all pending operations have completed. Because it requires your program to read the returned value before executing the next program statement, *OPC? can be used to cause the controller to wait for commands to complete before proceeding with its program.
*OPC	This sets the OPC status bit when all pending operations have completed. Since your program can read this status bit on an interrupt basis, *OPC allows subsequent commands to be executed.

8. Option Commands

8.1 Introduction

The Lx and Ls Series offer a number of options that are implemented in the power source controller. If one or more of these options are installed, they may be used from both the front panel and the interface. For front panel operation of any of these firmware options, consult the User Manual supplied with the unit. For use in an automated test system, this chapter contains the command sub system syntax for the available test options.

Specifically, the following firmware options are available at the time of this manual's printing:

- RTCA/DO-160D, Option –160[4]
- MIL-STD 704, Option –704[5]
- MIL-STD 704F, Option –704F[6]
- Abbreviated Plain English, Option –APE[7]. (Bundled with -GPIB option)

The AC power source will report all installed options, including any firmware options, when queried using the SYST:CONF:BYTE? or *OPT? command. Additional firmware options may be added over time. Consult the factory for additional information on firmware options not listed here but present on your unit.

[4] Option -160 requires Lx/Ls firmware version 0.88 or higher.

[5] Option -704 requires Lx/Ls firmware version 0.98 or higher.

[6] Option –704F requires Lx/Ls firmware version 1.00 or higher.

[7] Option APE requires Lx/Ls firmware version 0.98 or higher.
Check CI website for firmware updates.

8.2 APE Command Language (Abbreviated Plain English)

The APE (Abbreviated Plain English) command language syntax is available as an option on the Ls Series only. This option is not offered on Lx Series models. The APE language provides backward compatibility with California Instruments' L Series legacy products.

This option is bundled with the GPIB interface option on the Ls Series. If present, Ls Series units of similar power and voltage rating can be used to replace L Series in test systems running programs written using the APE syntax. The presence of this option can be determined by using the *OPT? or SYST:CONF? command queries. Note that the Ls can always be operated in SCPI mode as needed. If the –APE option is installed, it can be switched to APE mode. In APE mode, the IEEE488.2 common commands such as *IDN? are still available but not SCPI commands.

This section of the manual covers the APE syntax. Note that the SCPI command language is still available as well. The Ls can be configured to power up in either mode of operation. The procedure is as follows:

- From the front panel, select the CONFIGURATION screen using the MENU key. In the CONFIGURATION screen, select the LANG field. This field can be toggled between SPCI or APE using the shuttle knob.
- From the bus, send the following commands depending on the present mode of operation.

Present Mode	To change to other language mode, send:
APE mode	SCPI
SCPI mode	SYST:LANG APEN

Table 8-1: APE to SCPI mode change commands

8.2.1 Introduction

Remote programming through the IEEE-488 Interface (GPIB) consists of sending the unit address and the proper ASCII alphanumeric characters to identify the parameter and the numerical value or other argument. The description of the abbreviations for GPIB messages used in this section is listed in Table 3-10. These abbreviations must not be confused with the device dependent abbreviations used to describe the AC Power System operating parameters (ex. FRQ=Frequency, etc.).

8.2.2 L Series Backward Compatibility Issues

Although every effort has been made to mimic the L Series bus operation as closely as possible, the end-user should be aware that the Ls uses a completely different controller and operating system compared to the L Series. This inevitably leads to subtle differences of execution of the same application programs on each unit.

Specifically, the following discrepancies should be noted and may require slight modifications of programs that may be affected by them.

Discrepancies:

1. APE Programming commands received during the execution of a transient will stop the transient as was the case on the L Series but any program values associated with the command will not be accepted. Thus, while sending AMP100 to an L Series during transient execution will result in the transient being aborted and the output voltage set to 100 V, the Ls will only abort the transient program. If it is required to set the voltage, the AMP100 command should be replaced with an AMP command followed by an AMP100 command.
2. Ramp transients will be slewed in a linear fashion rather than in discrete steps as defined by the STEP value. Thus, the Ls determines the required slew rate. For example, where an L Series will step the voltage every second by 10 Volt to go to 100 V in 10 seconds, the Ls will ramp gradually from 0 to 100 V over a 10 second period using a 10V/s slew rate.
3. The Ls will hold the last error message in its error buffer until the TLK STA query message is received. Once the TLK STA has been received, the error buffer is cleared.
4. A change of the waveform THD level will cause the output to go to zero momentarily. However a change from zero THD to the previously set THD level will not affect the output. This may require the required THD level to be set when using an Ls before applying power to a EUT. On the L Series, this temporary loss of output was not required.
5. Unlike the California Instruments L Series controllers, sending a TLK XXX command to the Ls Controller will not cause the front panel to display the measurement screen. This is due to the different measurement screen layout and organization of the Ls series controller versus the L series controller.
6. The following APE commands are not supported due to hardware incompatibilities of the Ls Controller with the L series controllers:

CRL STP and PHZ STP	No support for current and phase angle ramps
CAL AMP STP	No support for calibration ramp
CAL PWR	There is no power calibration requirement on the Ls.
TLK MNU	Menus are different on Ls Series
CLMB and CLMC	Query format (TLK) only.

Configuration Issues:

The following configuration related issues are unique to the Ls Series when operated in APE mode and did not apply to the L Series:

1. The Square wave command (WVF SQW) is accepted only if the advance feature option is installed. (Option –ADV)
2. The System configuration language bit must be set to enable the APE option. See *OPT? Command in SCPI syntax section of this manual.
3. SYSTem:LANGuage APENglish will change the language to APE when in SCPI mode.
4. SCPI will change the language to SCPI when in APE mode.

5. Power source configuration queries should be done in SCPI mode. However the “TLK CFGA” APE command will respond with a configuration byte similar to that of the L series for backward compatibility.

Power-on Initialization:

If the Ls Series AC power source is powered up in APE mode, the normal recall power up setting from a user-assigned setup register will **NOT** take place. Instead a power on initialization similar to that of the L Series is used as shown below.

The factory default values for APE power on settings are:

ALMA 0
FLMA 60 Hz
INIA 0 V
INIC n A where n is the maximum current limit of the system at a given range.

APE Mode	SCPI Mode
ALMA 0 or 8	PONSetup:VRANge <voltage range>
FLMA <initial frequency>	PONSetup:FREQuency <initial frequency>
INIA <initial voltage>	PONSetup:VOLTage <initial voltage>
INIC<initial current limit>	PONSetup:CURRent <initial current limit>

Table 8-2: APE versus SCPI equivalent power initialization commands

Note: When upgrading the firmware on an Ls Series unit that has a firmware revision of 0.90 or less, the above parameters must be reset in APE mode.

8.2.3 GPIB Address

The GPIB address (also referred to as the unit address) of the Lx / Ls Series power source is the same for either language mode. The Unit Address can range from 0 through 31. The Unit Address is set at the factory to 1 but may be changed by selecting the CONFIGURATION screen and setting a new value. The value set is retained in non-volatile memory.

In APE mode, the GPIB address is returned by the TLK CFGA query command.

8.2.4 APE over RS232

Although not available on the L Series power source, the Ls AC power source also has a RS232C serial interface. It is possible to use the APE mode over RS232C but this mode of operation is not formally supported by California Instruments. Certain capabilities such as GPIB trigger and SRQ may not function when using the RS232C interface. In general, it is recommended to use the normal SCPI mode when programming the Ls Series over the RS232C interface.

8.2.5 Message Format

The message sent to the AC Power System must have the following format for each parameter:

HHHDXXX----------E±NND

Where:

H = Three letter mnemonic for each message header.

D = Optional header extension (A, B or C) to specify output (ref. Table 8-3)

X = Alpha, numeric or # for message header argument.

E = Optional ASCII E for exponent identification

± = Exponent sign

N = Exponent value 0 to ±63

D = Message string delimiter, (CR) (LF) or (LF)

More than one message header with its corresponding argument may be sent in one setup string with a common delimiter.

8.2.6 Numeric Data Field

Parameter values may be sent as an unsigned value with a decimal point or a decimal point with an exponent. The phase value may be sent as a signed value.

The Decimal Point for numeric data values may be either sent or inferred. The two following ASCII strings will represent 115 volts.

AMP115

AMP115.0

There may be any number of digits following the decimal point, not to exceed the 256 byte DAM buffer, but only the Least Significant Digit (LSD) of resolution will be recognized. The LSD for amplitude is 0.1 volts. The LSD for frequency is either 0.01, 0.1 or 1 Hz for up to 99.99, 999.9 or 5000 Hz respectively.

Any parameter's numeric value may be of a mixed form with a decimal point and exponent. The exponent may be a numeric, with or without leading zeros, up to a value of ±63. The following ASCII strings will represent 115 volts:

AMP1.15E2

AMP1.15E+2

AMP1.15E+02

AMP1150E-1

A positive exponent value is represented by either an ASCII "+" or an unsigned value.

8.2.7 Program Headers

A Program Header is a mnemonic of a series of three ASCII characters used to select a function or identify the data it precedes. The header is an abbreviation of the program function it identifies. The header may be followed by a header extension to separately program each output (phase A, B or C) to different values. If an extension is not added to the header all outputs will be programmed to the header's argument. See Table 8-3 for the definition of the Program Headers and their related arguments. Commands that are not supported on the Ls Series are noted.

Any header that is sent without an argument will cause the front display to show the closest available corresponding screen. Note however that the Ls Series does not have identical screens to the L Series so this feature is only partially compatible with legacy L Series programs. All commands are accepted however and no error messages will be generated. Refer to Figure 8-1 for a summary of all possible command sequences.

The program header extension works on the trailing exception rule. This characteristic can be used to shorten the setup string. The following example demonstrates the trailing exception rule by programming the phase A and B outputs to the square wave waveform and phase C to a sine wave.

WVF SQW WVF C SNW

Refer to Figure 8-1 for a summary of all possible APE command sequences.

8.2.8 APE Command Tree Summary

```
TO PROGRAM OUTPUT PARAMETERS:
->|AMP|-|-|- n)->|OPN|-> WVF-|-|-|SNW|->|SNC|-|INT|->REC-(n)->REG-(n)->*
  |FRQ| |A|     | |CLS|       |A| |SQW|| |CLK| |EXT||        |        |
  |CRL| |B|     |     |       |B|      |            |        |        |
  |RNG| |C|     |     |       |C|      |            |        |        |
  |PHZ|         |     |                |            |        |        |
  |DRP|         |     |                |            |        |        |
  |----------- >---- >--------------- >----------- >------- >------- >
TO RAMP OR STEP ONE OUTPUT PARAMETER:
->|AMP|-|-|-(n)-->STP-(n)-->DLY-(N)-->VAL-(n)--->*
  |FRQ| |A|     |
  |CRL| |B|      ->DLY-(n)-->VAL-(n)------------>*   [NOTE: NOT SUPPORTED ON Ls Series ]
  |PHZ| |C|                                          [NOTE: NOT SUPPORTED ON Ls Series ]
TO RAMP OR STEP TWO OUTPUT PARAMETERS:
->|AMP|-|-|-(n)->|AMP|-|-|-(n)->STP-(n)->DLY-(n)->VAL-(n)->STP-(n)->*
  |FRQ| |A|      |FRQ| |A|  |
  |CRL| |B|      |CRL| |B|  ------->DLY-(n)->VAL-(n)-->VAL-(n)----->*
                                                       [NOTE: NOT SUPPORTED ON Ls Series ]
  |PHZ| |C|      |PHZ| |C|                            [NOTE: NOT SUPPORTED ON Ls Series ]

TO REQUEST TALKING OF CALIBRATION COEFFICIENTS:
-->TLK-->CAL-|---|-|-|--->*
             |AMP| |A|
             |VLT| |B|
             |PWR| |C|
             |CUR|
TO SPECIFY THE SERVICE REQUEST INTERRUPT:
-->SRQ-(n)--->*
```

```
TO CALIBRATE OUTPUT:
```

```
-->CAL-|---|-|-|-(n)-->DLY-(n)-->STP-(n)-->VAL-(n)--->*     [NOTE: NOT SUPPORTED ON Ls
Series ]
       |AMP| |A|     |
             |B|     |
             |C|     \------------------------------->*
TO CALIBRATE MEASUREMENT:
-->CAL-|VLT|-|-|-(n)---->*
       |CUR| |A|
       |PWR| |B|
             |C|
TO REQUEST TALKING A PROGRAMMED PARAMETER OR MEASURED VALUE:
-->TLK-->|AMP|-|-|----->*
         |FRQ| |A|
         |CRL| |B|
         |RNG| |C|
         |PHZ|
         |SNC|
         |CLK|
         |MNU|                                    [NOTE: NOT SUPPORTED ON Ls Series ]
         |ELT|
         |VLT|
         |CUR|
         |PWR|
         |APW|
         |PWF|
         |ALM|
         |FLM|
         |CFG|
         |POF|
TO RECALL A REGISTER:
-->REC-(n)--->*
```

Figure 8-1: APE Command Tree

Notes:

* Represents either an IEEE-488 END or EOS message. The EOS message may be an ASCII Carriage Return (CR), Line Feed (LF) or just LF.

n Represents a numeric value.

8.2.9 APE Program Headers

The table below shows the APE headers, the phase selection extension and available arguments. If the phase extension(s) do not follow the header, the command will be applied to all available phases.

HEADER	EXTENSION	ARGUMENT	DEFINITION
AMP	A, B, C	# or numeric data from 0.0 to RNG value.	Amplitude in volts
CAL or CAL AMP	A, B, C	# or numeric data from 0.0 to 4095	Calibration Coefficient for output voltage (Range was 0 to 255 on L Series)
CAL VLT	A, B, C	Expected	Actual voltage at remote sense
CAL CUR	A, B, C	Expected	Actual current from power source
CAL PWR	A, B, C	Expected	Actual power from power source (Not available on Ls Series)
CLK		INT, EXT	Clock source
CRL	A, B, C	Numeric value 0.00 to 100.0 (maximum available current)	Current limit in Amps
DLY		Numeric data from 0,00 to 9999	Delay in seconds
DRP	A, B, C	1 through 5	Number of dropped periods.
FRQ		Numeric data from 45.00 or LLM to HLM value	Frequency in Hertz.
MOD	PHS	1 or 3	Programs the output phase configuration
PHZ	A, B, C	# or numeric data from 0.0 to ±999.9	Phase angle in degrees
PRG		0 through 15	Register load
REC		0 through 15	Recall register
REG		0 through 15c	Register load
RNG	A, B, C	0.0 to limit value of range	Amplitude range and limit value in volts
SNC		INT, EXT	Synchronize
SRQ		0, 1, 2	Service request disable, enable or at completion of program.
STP		From parameter minimum to maximum value	Step size
TLK		Any program header or other argument	Setup AC source to talk argument when talk addressed.
TRG			Execute (Trigger) setup parameters on

HEADER	EXTENSION	ARGUMENT	DEFINITION
			GPIB GET message.
VAL		From parameter minimum to maximum value	Final ramp or step value in volts, hertz, amps, degrees, sine wave or square wave.
WVF	A, B, C	SNW, SQW	Waveform
OPN			Open output relays
CLS			Close output relays
VLT	A, B, C		Used with TLK to request measurement of the output voltage
ELT			Used with TLK to request total accumulated run time.
CUR	A, B, C		Used with TLK to request measurement of the output load current.
PWR	A, B, C		Used with TLK to request measurement of the real output power.
APW	A, B, C		Used with TLK to request measurement of the apparent output power.
PWF	A, B, C		Used with TLK to request measurement of the output power factor.
PZM	A, B, C		Used with TLK to request measurement of the output phase angle.
FQM			Used with TLK to request measurement of the output frequency.

Table 8-3: APE language syntax program headers

8.2.10 APE Queries - TLK Headers

The table below shows the APE TLK headers, the phase selection extension and available arguments. If the phase extension(s) do not follow the header, the command will be applied to all available phases.

The TLK header precedes all query commands in APE. This is the equivalent of the “?” query termination in SCPI. Most settings can be queried by using the TLK header in conjunction with the relevant programming command header, e.g. TLK AMP to query the voltage setting. The TLK header is also used to query measurements.

Argument	Extension	Data returned	Definition
ALM	A B C	0000 *135.0 *270.0	Default voltage range code Low Voltage Range High Voltage Range
AMP	A, B, C	0 to 270.0	Programmed voltage Amplitude value in volts.
APW	A, B, C	0 to 6000 or 0.00 to 20.00	Output VA (3000Ls to 6000Ls) Output KVA (All other models)
CFG	A B C	0 to 30 * 28 * 120	IEEE-488 Listen Address Configuration Code Phase C initial Value
CLM	A B C	MAX CURRENT 0 or 2 2 or 1	Defines the maximum current per phase (model specific) Defines the power measurement resolution decimal point. Defines the current measurement resolution decimal point.
CRL	A, B, C	0 to MAX CURRENT	Programmed output current limit.
CUR	A, B, C	0.00 to 20.0 or 0.0 to 100.0	Output current (4500L-3P and 2750L-3P) (All other models)
ELT	A B C	0000 to 9999 00 to 59 00 to 59	Total accumulated hours (H) Accumulated minutes (M) Accumulated seconds (S)
FLM	A B C	60 45 5000	Default frequency Low frequency limit High frequency limit
FQM	None	45.00 to 5000	Measured output frequency
FRQ	None	45.00 to 5000	Programmed frequency
INI	A C	0000 to 005.0 O to CRL	Default voltage Default current limit
(*) Standard values shown. Values will be different for other ranges, output power and options. NOTE: If the A, B or C Extension is not sent with the argument, all phases will be reported.			
SNC	None	INT or EXT	Programmed external sync mode
WVF	A, B, C	INT or EXT	Programmed waveform
PHZ	A, B, C	0.0 to 359.9	Programmed output phase angle
PWR	A, B, C	0 to 2000 or	Output watts (3000Ls to 6000Ls) Output KW (All other models)

Argument	Extension	Data returned	Definition
		0.00 to 27.00	
PZM	A, B, C	0 to 359.9	Measured phase B and C output phase angle relative to A. A is always 0.0
REG	0 to 15	Contents of Reg	Talk contents of register
RNG	None	0 to 270.0	Programmed range and limit
SRQ	None	0, 1 or 2	Programmed SRQ status
VLT	A, B, C	0.0 to 400.0	Measured output voltage
THD	A, B, C	0 to 20	Programmed total harmonic distortion
NOTE: If the A, B or C Extension is not sent with the argument, all phases will be reported			

Table 8-4: APE Language TLK Arguments

8.2.11 Examples - APE Programming Commands

This section provides APE syntax examples and programming techniques. These examples are provided for reference only and are shown in no specific order.

To program Amplitude (AMP)

The AMP header with the optional A, B or C extension is used to identify the amplitude command. The argument is a numeric data field from 0.0 to the limit set by the RNG value. An attempt to program a value higher than this value will generate an error and a SRQ on the GPIB.

The following ASCII strings will program the voltage given in the left column:

To Set:	Issue:
A, B, C 0.0 volts	AMP0 or AMPA0AMPB0AMPC0
A, B, C 10.5 volts	AMP10.5 or AMP1.05E1 or AMP105E-1
A, B, C 100 volts	AMP100 or AMP100.0 or AMP1E2
A, B = 110.5, C = 115 or	AMPA110.5AMPB110.5AMPC115 AMP110.5AMPC115

To program Frequency (FRQ)

The FRQ header is used to identify the following numeric data as frequency. The following string will program the frequency to 60.56 Hz.

FRQ 60.56

To program Phase angle (PHZ)

The PHZ header with the optional A, B or C extension is used to identify the following numeric data as phase. The PHZ header sent with no extension will program the B and C outputs in phase with phase A. The phase of the A output will lead the EXT SNC signal by the value programmed. The following example will program the phase A output to 90 degrees relative to an external sync signal when operating in the EXT SNC mode:

PHZA 90

The following example will program phase B to 240.5 degrees and phase C to 119.3 degrees leading phase A.

PHZB 240.5 PHZ C 119.3

The PHZA value can be used to control the point of the phase A waveform where the change will occur. The following example will drop the phase A waveform at 90 degrees for 0.017 seconds before going to 115 volts.

PHZA 90 AMP0 DLY .017 VAL 115

The following example will increase the phase A output voltage to 135 volts for 0.017 seconds starting at the 90 degree point of the waveform. The voltage will return to 115 volts after the transient.

PHZA 90 AMPA 135 DLY .017 VAL 115

To program Current Limit (CRL)

The CRL header with the optional A, B or C extension is used to identify the Current Limit Command. The argument is a numeric data field from 0.0 to the maximum rated current of the power system.

The following string will program a current limit of 10.5 amps for all three phases:

CRL 10.5

To program Calibration (CAL)

The CAL header when used alone or followed by the header AMP, in addition to an A, B or C extension, is used to calibrate the programmed output voltage. The argument is a relative starting coefficient from 0 to 255 or the ASCII # symbol. The CAL ramp is not supported on the Ls Series. The CAL header can be used with a Delay (DLY) command to allow the external calibration AC DVM time to settle. A CAL coefficient can be programmed without a ramp by using only the argument with the CAL header. To program the CAL A coefficient to 55, use the following string:

CALA55

The CAL header is used with the headers VLT, CUR and PWR to calibrate the respective measurement function. An A, B or C extension follows the headers to designate a specific measurement channel. If the extension is omitted, the calibration coefficients for all measurement channels will be the same and will depend on only the value for phase A. The argument is a numeric value that represents the expected measured value. It should be equal to an external precision TRMS voltmeter, ammeter or power meter. The following ASCII string will cause the current measurement for phase A to measure the value indicated by a TRMS ammeter standard, 10.12 amps:

CAL CUR A 10.12

To program Ramp or Step operations (DLY)

The DLY header is used with a parameter that has a numeric argument (examples are AMP, FRQ, PHZ, CRL or CAL) in a single step program. The numeric argument is in seconds with four decades of resolution from 0.001 to 9999 seconds. The STP header with VAL may be used with DLY to completely specify a ramp program. The following string will first step the voltage to 125 volts for 2.55 seconds and return to 115 volts.

AMP 125 DLY 2.55 VAL 115

The following string will ramp the voltage from 10 volts to 115 volts with 1.5 volt/.5 sec. steps:

AMP 10 DLY .5 STP 1.5 VAL 115

When an AMP header with an argument of 0 is used, the waveform will stop and drop to zero volts at the point specified by the PHZ A value. The following ASCII string will stop the waveform at 0 degrees for .01 seconds and return to 115 volts:

PHZ A 0 AMP 0 DLY .01 VAL 115

The STP header is used to identify a numeric value as the increment or decrement value for a FRQ, CRL, AMP, PHZ or CAL ramp. The following example will ramp all outputs from 130 volts in 1.5 volt/.5 sec. steps to 10 volts.

AMP130 DLY.5 STP1.5 VAL10

The header VAL is used to identify the following numeric argument as the final Value of a ramp or step. If the VAL argument is larger than the initial value for the parameter to be ramped, the ramp will increment with step size defined by STP and DLY. With the VAL argument less than the initial value, the ramp will decrement from the initial parameter. A ramp or step operation can be started at anytime by the GPIB message Group Execute Trigger (GET). The operation will wait for the Group Execute Trigger when the TRG header is added to the string. The following example will decrement the output amplitude of phase A only from 120 in .1 volt/.2 sec steps to 100 volts after a Device Trigger.

AMP A 120 DLY.2 STP.1 VAL100 TRG

The following example will simultaneously ramp the Frequency from 400 to 500 Hz at a rate of 0.1 Hz per second and the Amplitude from 5 volts in increments of .5 volts per step:

RNG270 AMP5 FRQ400 STP.1 DLY1 VAL500 STP.5

A GPIB Service Request will be generated at the end of a ramp if SRQ2 is included in the setup string. The GPIB Group Execute Trigger can stop at a ramp operation anytime.

To program a Register (REG)

The REG header is used to load the register specified by the following numeric data with the preceding data. The numeric value is from 0 to 15. The PRG header is identical to the REG header and is included to standardize other AC power controllers. The following example will load a ramp program that will step the voltage from 10 to 115 volts with 1 volt/.5 sec steps at 400 Hz into register 0.

FRQ400 AMP10 DLY.5 STP1 VAL115 REG0

To recall a Register (REC)

The REC header is used to recall previously loaded data from a register identified by the following register number (0 to 15). The following example recalls and outputs the parameters stored in register 0 by an example in previous paragraph:

REC0

The following example recalls the parameters in register 0 and outputs the parameters after the IEEE-488 "GET" message.

REC0 TRG

The following is an example of register linking. The voltage and frequency is maintained at 115 volts and 60 Hz for 5 seconds and then the program contained in register 0 is recalled and executed. The program is stored in register 1.

FRQ60 AMP115 DLY5 VAL115 REC0 REG1

The program is initiated by the following ASCII string:

REC1

To program Voltage Range (RNG)

The RNG header is used to select a range. The numeric value following the RNG header will also define the upper limit for the AMP value. The RNG value will select the higher range if the value is greater than the lower range value defined by the ALM screen, which is 135 for the standard voltage range. If the range and voltage amplitude are to be programmed by the same data string the RNG header and argument must precede the AMP header or a syntax error will be generated. The

following example will select the 270 range from the 135/270 range pair with an upper amplitude limit of 210 volts.

RNG210

To program External Synchronization (SNC) (optional)

The SNC header is used with the EXT argument to synchronize the phase A output to an external sync input. The phase A output will be phase referenced to the sync input with the displacement equal to the PHZ A value. The following ASCII string will program the phase A output to 0 degree relative to the external sync input and select the external sync mode.

PHZA0 SNC EXT

Sending the ASCII string SNC INT will disable the sync input.

To program External Clock (CLK) (optional)

The CLK header has an argument of either EXT or INT. The CLK header with the EXT argument will make one AC Power System a slave to another system. The slave will operate at the same frequency as the master. Phase A of the slave will be related to phase A of the master by the PHZ A value of the slave.

NOTE The clock option is only available if the associated power systems have the -LKM option.

The following ASCII string will enable the CLOCK and LOCK inputs to the associated slave AC Power System:

CLK EXT

NOTE If there is no signal at the CLOCK input at the rear panel of the associated power system, the output will go to zero volts.

The ASCII string CLK INT will return the slave AC Power System to its programmed frequency.

To Trigger an operation (TRG)

The TRG header has no argument. When the TRG mnemonic is included in a setup string, it will delay execution of the string until the bus controller sends the GPIB Device Trigger message. The TRG header may also be used to trigger register operations by including the TRG header with the string used to recall a register. The following example will delay execution of the program in register 1 until an IEEE-488 Device Trigger is received:

REC1 TRG

The Trigger mode may also be enabled in the local mode by programming setup parameters without depressing the ENT key. The setup values will then be programmed in the remote mode when the Device Trigger is received.

To program the output Waveform (WVF) (Optional)

The header WVF with the optional A, B or C extension is used to identify the following argument as the Sine Wave (SNW) or Square Wave (SQW) function of the Waveform. The following example will program all outputs to the square wave function.

WVF SQW

The following example will program only output B to the square wave function:

WVFB SQW

To Open (OPN) and Close (CLS) the output relay

The OPN and CLS headers open and close the output relays in the power source. There is no argument associated with these headers. When the OPN or CLS headers is received the output voltage will be programmed to zero volts for 50 milliseconds before the output relays open or close.

To program Drop Cycles (DRP)

The DRP header is used to identify the Drop Command. The argument is a numeric data field from 1 to 5. The following string will drop the output voltage for phase B for five complete cycles and start at 0 degree of the waveform. Note that all drop phase angles are relative to Phase A.

PHZ A 120 DRP B

To program the Default Frequency (FLM A)

The default frequency is the output frequency after power-up or after an IEEE-488 Device Clear. The following example will program the default frequency to 400 Hz.

FLM A 400

To program the default Voltage (INI A)

The default voltage is the output voltage after power-up, IEEE-488 Device Clear or an Amplitude fault. The following example will program the default voltage to 5 volts.

INI A 5

NOTE: The restrictions on setting initial voltage that applied to the L Series do not apply to the Ls Series so any voltage amplitude - within the selected voltage range - can be set at initialization.

To program the default Current Limit (INI C)

The default current limit is the value after power-up or IEEE-488 Device Clear. The following example will program the default current limit to 10 amps.

INI C 10

To program the default Voltage Range (ALM A)

The default voltage range is the voltage range after power-up or IEEE-488 Device Clear. A value of 0 designates the low-range. A value of 8 designates the high range. The following example will program the default voltage range to the high range.

ALM A 8

To program 1 or 3 Phase Mode (MOD) (optional)

This command is valid only for Ls Series models with the –3 controller and the –MODE option. The MOD header with the required PHS extension is used to identify the mode command. The argument is either a 1 or a 3 to specify the 1-phase or 3-phase mode respectively. A mode change by the AC Power System will cause the output voltage to go to the default values. The following string will set the AC Power Systems to the 3-phase mode:

MOD PHS 3

8.2.12 Examples – APE Query Commands

The TLK header will setup the AC Power System to talk data. The TLK header will setup the AC Power System to report a programmed output parameter if the program header is the argument for the TLK header.

To setup the AC Power System to report a measured value, attach a measurement header as the TLK argument. The measurement headers are VLT, CUR, PWR, APW and PWF with an A, B or C extension and FQM with no extension.

Note: Unlike the California Instruments L Series controllers, sending a TLK XXX command to the Ls Controller will not cause the front panel to display the measurement screen. This is due to the different measurement screen layout and organization of the Ls series controller versus the L series controller.

The following string will setup the AC Power System to measure the phase A power output when it is talk addressed:

TLK PWR A

All arguments for the TLK header are shown in Table 3-13. Table 3-14 shows an example response for all TLK arguments with no A, B or C extension. For 1-phase systems, all responses will only include the phase A value. For 3-phase systems, if the TLK argument includes the A, B or C extension, the response message will be only for the indicated phase.

A GPIB Service Request (SRQ) will be generated at the completion of a measurement if the SRQ2 header is included with the TLK string. The following string will cause the Service Request to be generated when the power system has finished the power factor measurement.

TLK PWF SRQ2

Example talk responses are shown in Table 8-5.

Command		**Response (Fields separate by SPACE 0x20 characters)**		
		Field A	**Field B**	**Field C**
TLK	ALM	ALMA0000	B135.0	C270.0
TLK	AMP	AMPA000.0	B000.0	C000.0
TLK	APW	APWA1003	B0985	C1507
TLK	CFG	CFGA0001	B0028	C0120
TLK	CLM	CLMA11.12	B0002	C0000
TLK	CRL	CRLA11.12	B11.12	C11.12
TLK	CUR	CURA06.14	B05.12	C06.71
TLK	ELT	ELTH0147	M0051	S0033
TLK	FLM	FLMA0060	B0045	C0550
TLK	FQM	FQM59.97		
TLK	FRQ	FRQ60.00		
TLK	CLK	CLK INT (*)		
TLK	SNC	SNC INT		
TLK	PHZ	PHZA000.0	B240.0	C120.0
TLK	PWF	PWFA1.000	B1.000	C1.000
TLK	PWR	PWRA0.737	B0.620	C0.806

Command		Response (Fields separate by SPACE 0x20 characters)		
		Field A	**Field B**	**Field C**
TLK	PZM	PZMA000.0	B242.1	C118.9
TLK	REG0	(Contents of REG0)		
TLK	RNG	RNGA 135.0		
TLK	VLT	VLTA120.1	B119.8	C120.0
TLK	WVF	WVFA SNW	B SNW	C SNW (*)
Note (*)	If function is not enabled, a syntax Error message will be generated.			

Table 8-5: Example TALK responses for 3 phase systems

To query the measured Voltage (TLK VLT)

VLT may be used as an argument to the header TLK with an A, B or C extension. When used as an argument, it will set up the AC Power System to measure the output voltage with 0.1 volt resolution.

To query the measured Current (TLK CUR)

CUR may be used as an argument to the header TLK with an A, B or C extension. When used as an argument, it will set up the AC Power System to measure the output current in amps.

To query the measured Power (TLK PWR)

PWR may be used as an argument to the header TLK with an A, B or C extension. When used as an argument, it will set up the AC Power System to measure the output power in watts.

To query the measured Power Factor (TLK PWF)

PWF may be used as an argument to the header TLK with an A, B or C extension. When used as an argument, it will set up the AC Power System to measure the output power factor from 0 to 1.000.

To query the measured Apparent Power (TLK APW)

APW may be used as an argument to the header TLK with an A, B or C extension. When used as an argument, it will set up the AC Power System to measure the Apparent Power output in VA.

To query the measured Frequency (TLK FQM)

FQM may be used as an argument to the header TLK. There are no extensions for this argument. When FQM is used as an argument, it will set up the AC Power System to measure the output frequency in hertz.

To query the measured Phase Angle (TLK PZM)

PZM may be used as an argument with an extension A, B or C for the header TLK. When used as an argument, PZM will set up the AC Power System to measure the phase angle of phase B and C relative to phase A. The measurement is made at the External Sense terminals. Phase A is the reference phase and will always be reported as 000.0 degrees unless the AC Power System is operating in the external sync mode.

8.2.13 APE Message Separators

A complete message consists of a header and an argument. Since more than one message can be sent in a setup string, message separators included in the string between the message will make it more readable to the human operator. Three message separators are recognized: the comma (,), semicolon (;) and a space. Since these separators are ignored, they may be dispersed throughout a setup string.

The following are two examples of ASCII strings with separators:

PHZA90;FRQ60;AMP115

CRL,90;FRQ50;AMP,120

8.2.14 Service Requests

After power-up the GPIB Service Request (SRQ) will be generated after any error (example. syntax, output fault, etc.) as long as the Ls Unit is in APE mode. This SRQ output can be inhibited by the SRQ header followed by the single digit "0". The SRQ can be re-enabled by the SRQ header followed by 1. Sending SRQ2 causes an SRQ to be generated after the execution of a setup string or when data is available after a measurement query. The setup string can be of any type: ramp, calibration, etc.

The following example disables the GPIB SRQ.

SRQ0

8.2.15 Serial Poll Status Byte – Error Messages

Once the bus controller has detected the SRQ, it must determine the instrument needing service by the Serial Poll. During the polling routine the instrument needing service will return a Status Byte (STB) greater than decimal 63. The Status Byte values for various faults are given in Table 8-6.

Table 8-6.shows all of the possible error messages that can be generated by the AC Power System. The equivalent error messages used in SCPI mode will be displayed on the front panel of the AC Power System.

SRQ 1	SRQ 1	Reported Message	Cause
64	0	AMP A FAULT	Overload or sense line fault
65	1	AMP B FAULT	Overload or sense line fault
66	2	AMP AB FAULT	Overload or sense line fault
67	3	AMP C FAULT	Overload or sense line fault
68	4	AMP AC FAULT	Overload or sense line fault
69	5	AMP BC FAULT	Overload or sense line fault
70	6	AMP ABC FAULT	Overload or sense line fault
71	7	CRL FAULT	Output current exceeds program value
72	8	TEMP A FAULT	Amplifier over temperature
73	9	TEMP B FAULT	Amplifier over temperature
74	10	TEMP AB FAULT	Amplifier over temperature
75	11	TEMP C FAULT	Amplifier over temperature
76	12	TEMP AC FAULT	Amplifier over temperature
77	13	TEMP BC FAULT	Amplifier over temperature
78	14	TEMP ABC FAULT	Amplifier over temperature

SRQ 1	SRQ 1	Reported Message	Cause
90	26	RNG RANGE ERROR	RNG value greater than highest range
90	27	AMP RANGE ERROR	AMP value greater than RNG value
90	28	FRQ RANGE ERROR	FRQ value is less than 45 or greater than 1000 Hz (Ls) or 5000 Hz (Ls-HF)
93	29	PHZ RANGE ERROR	PHZ value greater than ±999.0
94	30	CRL RANGE ERROR	CRL value greater than maximum value
95	31	RMPA RANGE ERROR	DLY, STP or VAL values wrong
96	32	SYNTAX ERROR	Wrong string syntax
97	33	BUS LOCAL ERROR	Remote message sent while in local mode
98	34	EXT SYNC ERROR	No external sync input or signal not between min and max frequency
99	35	CPU MEMORY FAULT	CPU failed power-on self-test
100	36	DMA OVERFLOW ERROR	Remote message greater than 256 bytes
63	63		The response after SRQ2 is included in a setup string and the execution of the string or measurement is completed.
40	40	STA OK	No Error

Table 8-6: APE Status Byte Error Codes

8.2.16 End of String Delimiter

The End of String (EOS) delimiter recognized by the Ls AC Power source in APE mode is the ASCII Line Feed (LF). Carriage Return (CR) followed by Line Feed may also be used for EOS. The End or Identify (EOI) IEEE-488 message END will also be recognized. The END message is sent by setting the IEEE-488 End or Identify line true with the last data byte.

8.2.17 Group Execute Trigger - GET

The trigger mode is enabled when the mnemonic TRG is added to a setup string. The trigger command may be inserted anywhere in the string. When the mnemonic is detected, it will delay execution of the new setup values until the GPIB Device Trigger is sent by the bus controller.

A GPIB Device Trigger will also terminate a programmed ramp or other program.

The following setup string will recall the values from register 9 and delay execution until the GET message is received. (Note: GET is the abbreviation for the GPIB Group Execute Trigger message and does not represent a series of ASCII characters.

REC9 TRG

8.3 RTCA/DO-160D (-160)

The following are the remote commands available for the -160 test option. The ABORt command will terminate the test in progress at any time. See the Lx / Ls Series User Manual (P/N 7004-960) for more details about the implementation of each 160 test step.

8.3.1 Command Tree

```
DO160
    :NORMal
        :VOLT_FREQ
            :MINinum
            :MAXimum
        :VOLTage
            UNBalance
        :WAVeform :DISTortion
        :VOLTage
            :MODulation <numeric>
            :INTerrupt <numeric>
            :SURGe
        :FREQency
            :MODulation <numeric>
            :TRANSient
            :VARiation
    :EMERgency
        :VOLT_FREQ
            :MINimum
            :MAXimum
        :VOLTage
            :UNBalance
    :ABNormal stage
        :VOLTage
            :MINimum
            :MAXimum
            :UNDer
            :OVER
            :UNBalance
        :FREQuency
            :TRANsient
    :STANdard
    :GROup
```

8.3.2 DO160 Normal Test Commands

DO160:NORMal:VOLT_FREQ:MINimum

This command will set the voltage and frequency to the minimum level for the normal operation.

Command Syntax	DO160:NORMal:VOLT_FREQ:MINimum
Parameters	none
Examples	DO160:NORM:VOLT_FREQ:MIN
Query Syntax	none

DO160:NORMal:VOLT_FREQ:MAXimum

This command will set the voltage and frequency to the maximum level for the normal operation.

Command Syntax	DO160:NORMal:VOLT_FREQ: MAXimum
Parameters	none
Examples	DO160:NORM:VOLT_FREQ:MAX
Query Syntax	none

DO160:NORMal:VOLTage:UNBalance

This command will unbalance the voltage level for each phase to the normal high and low operating voltage of each phase. This test is valid only for three phase AC source.

Command Syntax	DO160:NORMal:VOLTage:UNBalance
Parameters	none
Examples	DO160:NORM:VOLT:UNB
Query Syntax	none

DO160:NORMal:WAVeform:DISTortion

This command will set the voltage distortion to 5% for the duration of the test.

Command Syntax	DO160:NORMal:WAVeform:DISTortion
Parameters	none
Examples	DO160:NORM:WAV:DIST
Query Syntax	none

DO160:NORMal:VOLTage:MODulation

This command will cause output voltage modulation. The level of modulation is the function of the rate of modulation. Refer to Figure 8-4 in the User Manual. The command parameter is the rate of modulation in Hz.

Command Syntax	DO160:NORMal:VOLTage:MODulation <NRf>
Parameters	<frequency>
Examples	DO160:NORM:VOLT:MOD 20
Query Syntax	DO160:NORM:VOLT:MOD?
Returned Parameters	<NR1>

DO160:NORMal:VOLTage:INTerrupt

This command will cause output voltage interruption. There are 15 different levels of interruption. Refer to Figure 8-6 in the User Manual for characteristics of each level. Test numbers 16 and 17 for all equipment that does not incorporate digital circuit. Test numbers 21 to 26 correspond to Standard I through VI for EUROCAE and RTCA2. See Figure 8-7 in User manual.

Command Syntax	DO160:NORMal:VOLTage:INTerrupt <NRf>
Parameters	<test number>
Examples	DO160:NORM:VOLT:INT 4
Query Syntax	DO160:NORM:VOLT:INT?
Returned Parameters	<NR1>

DO160:NORMal:VOLTage:SURGe

This command will generate the voltage levels required to generate a normal voltage source. Refer to Section 8.1.4.1, under the heading titled **VOLTAGE SURGE,** for details.

Command Syntax	DO160:NORMal:VOLTage:SURGe
Parameters	none
Examples	DO160:NORM:VOLT:SURG
Query Syntax	none

DO160:NORMal:FREQuency:MODulation

This command will cause output frequency modulation. The level of modulation is the function of the rate of modulation. Refer to Figure 8-5 in the User Manual. The command parameter is the rate of modulation in Hz.

Command Syntax	DO160:NORMal:FREQuency:MODulation <NRf>
Parameters	<frequency>
Examples	DO160:NORM:FREQ:MOD 0.1
Query Syntax	DO160:NORM:FREQ:MOD?
Returned Parameters	<NR2>

DO160:NORMal:FREQuency:TRANsient

This command applies to Group 1 only for the the Eurocae standard. Refer to Table 8-5 in the User Manual.

Command Syntax	DO160:NORMal:FREQuency:TRANsient
Parameters	none
Examples	DO160:NORM:FREQ:TRAN
Query Syntax	none
Returned Parameters	none

DO160:NORMal:FREQuency:VARiation

This command applies to Group 2 and 3 only for the Eurocae standard. Refer to Table 8-6 in the User Manual.

Command Syntax	DO160:NORMal:FREQuency:VARiation
Parameters	none
Examples	DO160:NORM:FREQ:VAR
Query Syntax	none
Returned Parameters	none

8.3.3 DO160 Emergency Test Commands

DO160:EMERgency:VOLT_FREQ:MINimum

This command will set the voltage and frequency to the minimum level for the emergency operation.

Command Syntax	DO160:EMERgency:VOLT_FREQ:MINimum
Parameters	none
Examples	DO160:EMER:VOLT_FREQ:MIN
Query Syntax	none

DO160:EMERgency:VOLT_FREQ:MAXimum

This command will set the voltage and frequency to the maximum level for the emergency operation.

Command Syntax	DO160:EMERgency:VOLT_FREQ:MAXimum
Parameters	none
Examples	DO160: EMER:VOLT_FREQ:MAX
Query Syntax	none

DO160: EMERgency:VOLTage:UNBalance

This command will unbalance the voltage level for each phase to the emergency high and low operating voltage of each phase. This test is valid only for three phase AC source.

Command Syntax	DO160:EMERgency:VOLTage:UNBalance
Parameters	none
Examples	DO160: EMER:VOLT:UNB
Query Syntax	none

8.3.4 DO160 Abnormal Test Commands

DO160:ABNormal:VOLTage:MINimum

This command will set the voltage to the minimum level for the abnormal operation.

Command Syntax	DO160:ABNormal:VOLTage:MINimum
Parameters	none
Examples	DO160:ABN:VOLT:MIN
Query Syntax	none

DO160:ABNormal:VOLTage:MAXimum

This command will set the voltage to the maximum level for the abnormal operation.

Command Syntax	DO160:ABNormal:VOLTage:MAXimum
Parameters	none
Examples	DO160:ABN:VOLT:MAX
Query Syntax	none

DO160:ABNormal:VOLTage:UNDer

This command will set the voltage to the under voltage level for the abnormal operation.

Command Syntax	DO160:ABNormal:VOLTage:UNDer
Parameters	none
Examples	DO160:ABN:VOLT:UND
Query Syntax	none

DO160:ABNormal:VOLTage:OVER

This command will set the voltage to the surge level for the abnormal operation.

Command Syntax	DO160:ABNormal:VOLTage:OVER
Parameters	none
Examples	DO160:ABN:VOLT:OVER
Query Syntax	none

DO160:ABNormal:VOLTage:UNBalance

This test will change the output voltage for phase A and B to 134V and phase C to a voltage lower by a value specified by an offset. This command applies only to test standard selection RTCA2. Refer to the User Manual for details.

Command Syntax	DO160:ABNormal:VOLTage:UNBalance
Parameters	none
Examples	DO160:ABN:VOLT:UNB
Query Syntax	none

DO160:ABNormal:FREQuency:TRANsient

This command applies to Group 1 only for the EuroCAE standard. Refer to the User Manual for details.

Command Syntax	DO160:ABNormal:FREQuency:TRANsient
Parameters	none
Examples	DO160:ABN:FREQ:TRAN
Query Syntax	none
Returned Parameters	none

8.3.5 DO160 Test Setup Commands

DO160:STANdard

This command will select the proper test standard. The standard selection must be set prior to any test selection.

The RTCA2 selection includes the Change 2 notice to the DO160D test standard as it applies to section 16. The RTCA selection does not include the Change 2 updates.

The Airbus standard is the same as the EuroCAE-14D standard with the exception of nominal voltage modulation.

Command Syntax	DO160:STANdard
Parameters	RTCA | RTCA2 | EURocae | AIRBus
Examples	DO160:STAN RTCA
Query Syntax	DO160:STAN?

DO160:GROup

This command is used to select equipment Group 1, 2 or 3 for the EUROCAE standard or equipment Group ACF, ANF or AWF for the RTCA2 standard. Some test (commands) apply only to specific groups of equipment. If a test is executed for a group to which it does not apply, the command is ignored by the power source. Note that in this case no error is generated. The application program is responsible for selecting the relevant Standard, Group and test.

Command Syntax	DO160:GROup <NR1>
Parameters	1 | 2 | 3 | ACF | ANF | AWF
Examples	DO160:GROup 2
Query Syntax	DO160:GRO?

8.4 MIL-STD 704 Rev D - F (-704)

The following are the remote commands available for the -704 test option. There are two firmware options available for MIL-STD 704 testing,the –704 option and the -704F option:

- Option –704 covers revisions D through F and matches the traditional implementation used on other California Instruments AC power sources. This mode provides shorted test times but does not follow the test protocols that were published with revision F in 2004. This option uses SCPI command syntax prefix MIL704 and is covered in this chapter.
- Option –704F covers revisions A thorugh F and does follow the new test protocol guidelines published in 2004. The –704F option uses SCPI command syntax prefix MS704 and is covered in chapter 8.5.

The ABORt command will terminate the test in progress at any time. See the Lx / Ls Series User Manual (P/N 7004-960) for more details about the implementation of each 704 test step. The–704 option as implemented on the Lx/Ls Series only supports AC power applications. DC mode is not available on the Lx/Ls Series so no DC tests are provided in the –704 option.

Note that none of the MIL704 commands do accept parameters or have a query format except for the MIL704:VERSion command, which accept a letter D, E or F as a parameter and the MIL704:FREQ command. The MIL704:VERSion command query response will return the letter D, E or F based on the selection test standard version. The MIL704:FREQuency command query response will return the nominal test frequency setting.

Programming Considerations

Several of the MIL-STD 704 test steps take considerable time to execute. (Refer to Lx/Ls User Manual P/N 7004-960 for approximate test times. The *OPC command may be used to set the OPC bit in the Event Status Register upon command completion. The Event Status Register OPC bit can be enabled through the appropriate enable register to generate an SRQ if GPIB is used. Alternatively, the *OPC? query commend can be used to poll for completion of the MIL704 command.

8.4.1 Command Tree

```
MIL704
    :ABNormal
        :VOLTage
                [:UNDer]
                :OVER
        :FREQuency
                [:UNDer]
                :OVER
    :EMERgency
        :VOLTage
        :FREQuency
    :FREQuency          400Hz | 60 Hz | VFRequency
    :SSTate
        :VOLTage
                [:LEVel]
                :MODulation
                :UNBalance
        :PHASe
                [:UNBalance]
        :WAVeform
                [:DISTortion]
```

```
        :FREQuency
                [:LEVel]
                :MODulation
    :TRANsient
        :VOLTage
                [:LOW]
                :HIGH
        :FREQuency
                [:LOW]
                :HIGH
    :VERSion    D | E | F
```

8.4.2 MIL704 General Commands

MIL704:VERSion

This command will select the required test standard version. The version selection must be set prior to any test selection.

Available revsions are D, E and F.

Command Syntax	MIL704:VERSion
Parameters	D | E | F
Examples	MIL704:VERS E
Query Syntax	MIL704:VERS?
Returned Parameters	<CRD>

MIL704:FREQuency

This command will selects the nominal test frequency. For revisions D and E, the only available setting is 400 Hz. For revision F (draft), available settings are 60 Hz, 400 Hz or variable frequency. The nominal frequency selection must be set prior to any test execution.

Command Syntax	MIL704:FREQuency
Parameters	60HZ | 400HZ | VFRequency
Examples	MIL704:FREQ VFR
Query Syntax	MIL704:FREQ?
Returned Parameters	<CRD>

8.4.3 MIL704 Steady State Commands

MIL704:SSTate:VOLTage

This command will set the voltage level for the steady state operation.

Command Syntax	MIL704:SSTate:VOLTage[:LEVel]
Parameters	none
Examples	MIL704:SST:VOLT
Query Syntax	none

MIL704:SSTate:MODulation

This command will set the voltage modulation level for the steady state operation.

Command Syntax	MIL704:SSTate:MODulation
Parameters	none
Examples	MIL704:SST:MOD
Query Syntax	none

MIL704:SSTate:UNBalance

This command will set the voltage unbalance for the steady state operation. This command is only relavent when in 3 phase mode.

Command Syntax	MIL704:SSTate:UNBalance
Parameters	none
Examples	MIL704:SST:UNB
Query Syntax	none

MIL704:SSTate:PHASe[:UNBalance]

This command will set the phase angle unbalance for the steady state operation. This command is only relavent when in 3 phase mode.

Command Syntax	MIL704:SSTate:PHASe[:UNBalance]
Parameters	none
Examples	MIL704:SST:PHAS
Query Syntax	none

MIL704:SSTate:WAVeform[:DISTortion]

This command will set the voltage distortion level for the steady state operation.

Command Syntax	MIL704:SSTate:WAVeform[:DISTortion]
Parameters	none
Examples	MIL704:SST:WAV
Query Syntax	none

MIL704:SSTate:FREQuency[:LEVel]

This command will set the frequency level for the steady state operation.

Command Syntax	MIL704:SSTate:FREQuency[:LEVel]
Parameters	none
Examples	MIL704:SST:FREQ
Query Syntax	none

MIL704:SSTate:FREQuency:MODulation

This command will set the frequency modulation for the steady state operation.

Command Syntax	MIL704:SSTate:FREQuency:MODulation
Parameters	none
Examples	MIL704:SST:FREQ:MOD
Query Syntax	none

8.4.4 MIL704 Transient Commands

MIL704:TRANsient:VOLTage[:LOW]

This command will set the low voltage level for the transient state operation.

Command Syntax	MIL704:TRANseint:VOLTage[:LOW]
Parameters	none
Examples	MIL704:TRAN:VOLT
Query Syntax	none

MIL704:TRANsient:VOLTage:HIGH

This command will set the high voltage level for the transient state operation.

Command Syntax	MIL704:TRANseint:VOLTage:HIGH
Parameters	none
Examples	MIL704:TRAN:VOLT:HIGH
Query Syntax	none

MIL704:TRANsient:FREQuency[:LOW]

This command will set the low frequency level for the transient state operation.

Command Syntax	MIL704:TRANseint:FREQuency[:LOW]
Parameters	none
Examples	MIL704:TRAN:FREQ
Query Syntax	none

MIL704:TRANsient: FREQuency:HIGH

This command will set the high frequency level for the transient state operation.

Command Syntax	MIL704:TRANseint:FREQuency:HIGH
Parameters	none
Examples	MIL704:TRAN:FREQ:HIGH
Query Syntax	none

8.4.5 MIL704 Abnormal State Commands

MIL704:ABNormal:VOLTage[:UNDer]

This command will set the low voltage level for the abnormal state operation.

Command Syntax	MIL704:ABNormal:VOLTage[:UNDer]
Parameters	none
Examples	MIL704:ABN:VOLT
Query Syntax	none

MIL704:ABNormal:VOLTage:OVER

This command will set the high voltage level for the abnormal state operation.

Command Syntax	MIL704:ABNormal:VOLTage:OVER]
Parameters	none
Examples	MIL704:ABN:VOLT:OVER
Query Syntax	none

MIL704:ABNormal:FREQuency[:UNDer]

This command will set the low frequency level for the abnormal state operation.

Command Syntax	MIL704:ABNormal:FREQuency[:UNDer]
Parameters	none
Examples	MIL704:ABN:FREQ
Query Syntax	none

MIL704:ABNormal:FREQuency:OVER

This command will set the high frequency level for the abnormal state operation.

Command Syntax	MIL704:ABNormal:FREQuency:OVER]
Parameters	none
Examples	MIL704:ABN:FREQ:OVER
Query Syntax	none

8.4.6 MIL704 Emergeny State Commands

MIL704:EMERgency:VOLTage

This command will set the voltage level for the emergency state operation.

Command Syntax	MIL704:EMERgency:VOLTage
Parameters	none
Examples	MIL704:EMER:VOLT
Query Syntax	none

MIL704:EMERgency:FREQuency

This command will set the frequency level for the emergency state operation.

Command Syntax	MIL704:EMERgency:FREQuency
Parameters	none
Examples	MIL704:EMER:FREQ
Query Syntax	none

8.5 MIL-STD 704 Rev A - F (-704F)

The following are the remote commands available for the –704F test option. There are two firmware options available for MIL-STD 704 testing,the –704 option and the -704F option:

- Option –704 covers revisions D through F and matches the traditional implementation used on other California Instruments AC power sources. This mode provides shorted test times but does not follow the test protocols that were published with revision F in 2004. This option uses SCPI command syntax prefix MIL704 and is covered in this chapter.
- Option –704F covers revisions A thorugh F and does follow the new test protocol guidelines published in 2004. The –704F option uses SCPI command syntax prefix MS704 and is covered in chapter 8.5.

The MS704 commands may be used to access the –704F option standard implementation on the Ls/Lx Series. All commands for this option have a “MS704” prefix instead of the “MIL704” prefix used for the legacy –704 option. The –704F option implementation goes beyond the legacy implementation used for revisions D and E of the MIL-STD 704 and incorporates all revisions from A through F.

Note: The –704F was released with revision 1.00 of the Lx/Ls firmware. If your unit has a version prior to this release, the MS704 commands will not be available. A firmware update will be required to use this mode. Visit www.calinst.com for update information.

The advanced version not only covers test levels, it also implements the recommended test sequences to use as outlined in the new revision F Mil-Std document. This implies that the test times are considerably longer than was the case before. For abbreviated tests, use the MIL704 command set documents in section 8.4.

The ABORt command will terminate the test in progress at any time. See the Lx / Ls Series User Manual (P/N 7004-960) for more details about the implementation of each 704 test step. The–704 option as implemented on the Lx/Ls Series only supports AC power applications. DC mode is not available on the Lx/Ls Series so no DC tests are provided in the –704 option.

Note that most of the MS704 commands do accept parameters or have a query format except where indicated in the table.

Command	Parameters
MS704:VERSion	A, B, C, D, E or F
MS704:GROup	SAC, SVF, SXF, TAC, TVF
MS704:FREQuency	<numeric value>
MS704:STEP	SINGle or CONTinous
MS704:TEST:CONDition	A letter form A to Z or AA to ZZ function of test.

Programming Considerations

Several of the MIL-STD 704 test steps take considerable time to execute. (Refer to Lx/Ls User Manual P/N 7004-960 for approximate test times. The *OPC command may be used to set the OPC bit in the Event Status Register upon command completion. The Event Status Register OPC bit can be enabled through the appropriate enable register to generate an SRQ if GPIB is used. Alternatively, the *OPC? query commend can be used to poll for completion of the MIL704 command.

8.5.1 Command Tree

```
MS704
    :ABNormal
        :LIMits
                [:ALL]
                :NOMinal
                :LOW
                :HIGH
        :VOLTage
                :TRANsient
                        [:ALL]
                        :OVER
                        :UNDer
                        :COMBination
        :FREQuency
                :TRANsient
                        [:ALL]
                        :OVER
                        :UNDer
                        :COMBination
    :EMERgency
        :LIMits
                [:ALL]
                :NOMinal
                :LOW
                :HIGH
    :FREQuency
    :GROUp
    :NORMal
        :SSLimits
                [:ALL]
                :NOMinal
                :LOW
                :HIGH
                :UNBalance
        :VOLTage
                :PHASe
                        :DIFFerance
                :MODulation
                :DISTortion
                        :TOTal
                :TRANsient
                        [:ALL]
                        :OVER
                        :UNDer
                        :COMBination
        :FREQuency
                :MODulation
                :TRANsient
                        [:ALL]
                        :OVER
                        :UNDer
                        :COMBination
    :POWer
```

```
    :FAIL
        [:COMBination]
            [:ALL]
            :ONE
            :TWO
        :THRee
        :PHASE
            REVersal
:VERSion
:SKIP
:STATus
:STEP
:TEST
    :CONDition
:TRANsfer
    [:POWer]
        [:INTerrupt]
```

8.5.2 MS704 General Commands

A number of MS704 commands are available to define the revision, mode of operation, nominal frequency and EUT class to be used for the DO160 test. These general commands should be set used to define the required test settings prior to calling any specific test step commands.

While most of the MS704 commands do not accept parameters or have a query format, the general setup commands do as indicated in the table below.

Command	Parameters
MS704:REVision	A, B, C, D, E or F
MS704:GROup	SAC, SVF, SXF, TAC, TVF
MS704:FREQuency	<numeric value>
MS704:STEP	SINGle or CONTinous
MS704:TEST:CONDition	A letter form A to Z or AA to ZZ function of test.

MS704:FREQuency

This command will selects the nominal test frequency. For revisions D and E, the only available setting is 400 Hz. For revision F (draft), available settings are 60 Hz, 360 Hz, 400 Hz, 600 Hz or 800 Hz. This command will only accept values that are consistent with the selected test group. Refer to the table below for valid frequency settings by group.

GROUP	Steady State Frequency in Hz			
SAC	400			
TAC	400			
SVF	400	360	600	800
TVF	400	360	600	800
SXF	60			

Table 8-7: MS704 Steady state frequency by group

The nominal frequency selection must be set prior to any test execution. Select the correct group first so the frequency selected is indeed available.

Command Syntax	MS704:FREQuency
Parameters	60 | 360 | 400 | 600 | 800
Examples	MS704:FREQ 400
Query Syntax	MS704:FREQ?
Returned Parameters	<CRD>

MS704:GROUp

This command sets the EUT test group.

Command Syntax	MS704:GROUp
Parameters	SAC | TAC | SVF | TVF | SXF
Examples	MS704:GROU SAC
Query Syntax	MS704:GROU?
Returned Parameters	<CRD>

MS704:REVision

This command sets the RTCA DO-160 test standard revision to be used. The test levels and duration are typically a function of the test standard revision.

Command Syntax	MS704:REVision
Parameters	A | B | C | D | E | F
Examples	MS704:REV F
Query Syntax	MS704:REV?
Returned Parameters	<CRD>

MS704:SKIP

This command skips the currently active test step. This command may be used to proceed immediately to the next step in a test sequence.

Note that if a test steps is normally repeated more than once, the SKIP command only skips the repetition that is active. For test conditions with more than one repeat, to skip to the next test condition will require a SKIP command for each repeat to be issued. Alternatively, the ABORt command may be used to abort the entire test in progress.

Command Syntax	MS704:SKIP
Parameters	none
Examples	MS704:SKIP
Query Syntax	none

MS704:STATus?

This is a query only command that reports the test progress status of the test step in progress. The status returned is either “IDLE” if no tests are running or the test number, test condition and time remaining till completion of the test in minutes and seconds. This command query may be used to poll the progress of a test.

Command Syntax	MS704:STATus?
Parameters	none
Examples	MS704:STAT?
Query Syntax	MS704:STAT?
Returned Parameters	<CRD>
Response	SAC102 A 03:32

MS704:STEP

This command sets the execution mode for each test step execution. Available settings are SINGLE or CONTINUOUS. In single step mode, a selected test and test condition (A..Z, AA..ZZ) will be run by itself. This allows an individual test condition to be executed. In continuous mode, all remaining test conditions for the selected test will be run once the selected test condition is completed. Thus, in continuous mode, the rest of the test will run from the selected test condition forward.

Command Syntax	MS704:STEP
Parameters	SINGle | CONTinuous
Examples	MS704:STEP SING
Query Syntax	MS704:STEP?
Returned Parameters	<CRD>

MS704:TEST:CONDition

This command sets the desired test conditions that apply to the EUT being test. The operating condition for the EUT determines the severity of the immunity tests applied. Available test conditions are defined by the letters A through Z or AA to ZZ.

Note that parameters AA to ZZ are only valid if the test group selected has more than 26 test conditions (A..Z). For tests that show tests conditions starting at AA, use A to select the first the first test condition, not AA.

Command Syntax	MS704:TEST:CONDition
Parameters	A | .. | Z | AA | .. | ZZ
Examples	MS704:TEST:COND A
Query Syntax	MS704:TEST:COND?
Returned Parameters	<CRD>

8.5.3 MS704 Steady State Commands

Steady state tests can be started by sending one of the MS704:NORM commands. Available normal state commands are listed below.

MS704:NORMal:SSLimits[:ALL]

This command will run all steady state normal operation mode tests.

Command Syntax	MS704:NORMal:SSLimits[:ALL]
Parameters	none
Examples	MS704:NORM:SSL
Query Syntax	none

MS704:NORMal:SSLimits:NOMinal

This command will run the steady state normal operation nominal voltage test.

Command Syntax	MS704:NORMal:SSLimits:NOMinal
Parameters	none
Examples	MS704:NORM:SSL:NOM
Query Syntax	none

MS704:NORMal:SSLimits:LOW

This command will run the steady state normal operation low voltage test.

Command Syntax	MS704:NORMal:SSLimits:LOW
Parameters	none
Examples	MS704:NORM:SSL:LOW
Query Syntax	none

MS704:NORMal:SSLimits:HIGH

This command will run the steady state normal operation high voltage test.

Command Syntax	MS704:NORMal:SSLimits:HIGH
Parameters	none
Examples	MS704:NORM:SSL:HIGH
Query Syntax	none

MS704:NORMal:SSLimits:UNBalance

This command will run the steady state normal operation voltage unbalance test. This test is only available in the 3 phase mode.

Command Syntax	MS704:NORMal:SSLimits:UNBalance
Parameters	none
Examples	MS704:NORM:SSL:UNB
Query Syntax	none

MS704:NORMal:VOLTage:PHASe:DIFFerence

This command will run the steady state voltage phase difference test. This test is only available in the 3 phase mode.

Command Syntax	MS704:NORMal:VOLTage:PHASe:DIFFerence
Parameters	none
Examples	MS704:NORM:VOLT:PHAS:DIFF
Query Syntax	none

MS704:NORMal:VOLTage:MODulation

This command will run the steady state voltage modulation test.

Command Syntax	MS704:NORMal:VOLTage:MODulation
Parameters	none
Examples	MS704:NORM:VOLT:MOD
Query Syntax	none

MS704:NORMal:VOLTage:DISTortion:TOTal

This command will run the steady state voltage distortion test.

Command Syntax	MS704:NORMal:VOLTage:DISTortion:TOTal
Parameters	none
Examples	MS704:NORM:VOLT:DIST:TOT
Query Syntax	none

MS704:NORMal:VOLTage:TRANsient[:ALL]

This command will run all the steady state voltage transients tests.

Command Syntax	MS704:NORMal:VOLTage:TRANsient[:ALL]
Parameters	none
Examples	MS704:NORM:VOLT:TRAN
Query Syntax	none

MS704:NORMal:VOLTage:TRANsient:OVER

This command will run the steady state over voltage transients test.

Command Syntax	MS704:NORMal:VOLTage:TRANsient:OVER
Parameters	none
Examples	MS704:NORM:VOLT:TRAN:OVER
Query Syntax	none

MS704:NORMal:VOLTage:TRANsient:UNDer

This command will run the steady state under voltage transients test.

Command Syntax	MS704:NORMal:VOLTage:TRANsient:UNDer
Parameters	none
Examples	MS704:NORM:VOLT:TRAN:UND
Query Syntax	none

MS704:NORMal:VOLTage:TRANsient:COMBination

This command will run the steady state combination voltage transients test.

Command Syntax	MS704:NORMal:VOLTage:TRANsient:COMBination
Parameters	none
Examples	MS704:NORM:VOLT:TRAN:COMB
Query Syntax	none

MS704:NORMal:FREQuency:MODulation

This command will run the steady state frequency modulation test.

Command Syntax	MS704:NORMal:FREQuency:MODulation
Parameters	none
Examples	MS704:NORM:FREQ:MOD
Query Syntax	none

MS704:NORMal:FREQuency:TRANsient[:ALL]

This command will run all the steady state frequency transients tests.

Command Syntax	MS704:NORMal:FREQuency:TRANsient[:ALL]
Parameters	none
Examples	MS704:NORM:FREQ:TRAN
Query Syntax	none

MS704:NORMal:FREQuency:TRANsient:OVER

This command will run the steady state over frequency transients test.

Command Syntax	MS704:NORMal:FREQuency:TRANsient:OVER
Parameters	none
Examples	MS704:NORM:FREQ:TRAN:OVER
Query Syntax	none

MS704:NORMal:FREQuency:TRANsient:UNDer

This command will run the steady state under frequency transients test.

Command Syntax	MS704:NORMal:FREQuency:TRANsient:UNDer
Parameters	none
Examples	MS704:NORM:FREQ:TRAN:UND
Query Syntax	none

MS704:NORMal:FREQuency:TRANsient:COMBination

This command will run the steady state combination frequency transients test.

Command Syntax	MS704:NORMal:FREQuency:TRANsient:COMBination
Parameters	none
Examples	MS704:NORM:FREQ:TRAN:COMB
Query Syntax	none

8.5.4 MS704 Abnormal State Commands

Abnormal state tests can be started by sending one of the MS704:ABN commands. Available abnormal state commands are listed below.

MS704:ABNormal:LIMits[:ALL]

This command will run all abnormal state operation mode tests.

Command Syntax	MS704:ABNormal:LIMits[:ALL]
Parameters	none
Examples	MS704:ABN:LIM
Query Syntax	none

MS704:ABNormal:LIMits:NOMinal

This command will run the abnormal state nominal operation mode test.

Command Syntax	MS704:ABNormal:LIMits:NOMinal
Parameters	none
Examples	MS704:ABN:LIM:NOM
Query Syntax	none

MS704:ABNormal:LIMits:LOW

This command will run the abnormal state low operation mode test.

Command Syntax	MS704:ABNormal:LIMits:LOW
Parameters	none
Examples	MS704:ABN:LIM:LOW
Query Syntax	none

MS704:ABNormal:LIMits:HIGH

This command will run the abnormal state high operation mode test.

Command Syntax	MS704:ABNormal:LIMits:HIGH
Parameters	none
Examples	MS704:ABN:LIM:HIGH
Query Syntax	none

MS704:ABNormal:VOLTage:TRANsient[:ALL]

This command will run all the abnormal voltage transients tests.

Command Syntax	MS704:ABNormal:VOLTage:TRANsient[:ALL]
Parameters	none
Examples	MS704:ABN:VOLT:TRAN
Query Syntax	none

MS704:ABNormal:VOLTage:TRANsient:OVER

This command will run the abnormal over voltage transients test.

Command Syntax	MS704:ABNormal:VOLTage:TRANsient:OVER
Parameters	none
Examples	MS704:ABN:VOLT:TRAN:OVER
Query Syntax	none

MS704:ABNormal:VOLTage:TRANsient:UNDer

This command will run the abnormal under voltage transients test.

Command Syntax	MS704:NORMal:VOLTage:TRANsient:UNDer
Parameters	none
Examples	MS704:NORM:VOLT:TRAN:UND
Query Syntax	none

MS704:ABNormal:VOLTage:TRANsient:COMBination

This command will run the abnormal combination voltage transients test.

Command Syntax	MS704:ABNormal:VOLTage:TRANsient:COMBination
Parameters	none
Examples	MS704:ABN:VOLT:TRAN:COMB
Query Syntax	none

MS704:ABNormal:FREQuency:TRANsient[:ALL]

This command will run all the abnormal frequency transients tests.

Command Syntax	MS704:ABNormal:FREQuency:TRANsient[:ALL]
Parameters	none
Examples	MS704:ABN:FREQ:TRAN
Query Syntax	none

MS704:ABNormal:FREQuency:TRANsient:OVER

This command will run the abnormal over frequency transients test.

Command Syntax	MS704:ABNormal:FREQuency:TRANsient:OVER
Parameters	none
Examples	MS704:ABN:FREQ:TRAN:OVER
Query Syntax	none

MS704:ABNormal:FREQuency:TRANsient:UNDer

This command will run the abnormal under frequency transients test.

Command Syntax	MS704:ABNormal:FREQuency:TRANsient:UNDer
Parameters	none
Examples	MS704:ABN:FREQ:TRAN:UND
Query Syntax	none

MS704:ABNormal:FREQuency:TRANsient:COMBination

This command will run the abnormal combination frequency transients test.

Command Syntax	MS704:ABNormal:FREQuency:TRANsient:COMBination
Parameters	none
Examples	MS704:ABN:FREQ:TRAN:COMB
Query Syntax	none

8.5.5 MS704 Emergency State Commands

Emergency state tests can be started by sending one of the MS704:EMER commands. Available emergency state commands are listed below.

MS704:EMERgency:LIMit[:ALL]

This command will run all emergency state operation mode tests.

Command Syntax	MS704:EMERgency:LIMit[:ALL]
Parameters	none
Examples	MS704:EMER:LIM
Query Syntax	none

MS704:EMERgency:LIMit:NOMinal

This command will run the emergency state nominal operation mode tests.

Command Syntax	MS704:EMERgency:LIMit:NOMinal
Parameters	none
Examples	MS704:EMER:LIM:NOM
Query Syntax	none

MS704:EMERgency:LIMit:LOW

This command will run the emergency state low operation mode tests.

Command Syntax	MS704:EMERgency:LIMit:LOW
Parameters	none
Examples	MS704:EMER:LIM:LOW
Query Syntax	none

MS704:EMERgency:LIMit:HIGH

This command will run the emergency state high operation mode tests.

Command Syntax	MS704:EMERgency:LIMit:HIGH
Parameters	none
Examples	MS704:EMER:LIM:HIGH
Query Syntax	none

8.5.6 MS704 Power Fail State Commands

Power fail state tests can be started by sending one of the MS704:POW:FAIL commands. Available power fail state commands are listed below.

MS704:POWer:FAIL[:COMBination][:ALL]

This command will run all power fail state combination operation mode tests.

Command Syntax	MS704:POWer:FAIL[:COMBinaton][:ALL]
Parameters	none
Examples	MS704:POW:FAIL
Query Syntax	none

MS704:POWer:FAIL[:COMBination]:ONE

This command will run the power fail state combination operation mode 1 test.

Command Syntax	MS704:POWer:FAIL[:COMBinaton]:ONE
Parameters	none
Examples	MS704:POW:FAIL:ONE
Query Syntax	none

MS704:POWer:FAIL[:COMBination]:TWO

This command will run the power fail state combination operation mode 2 test.

Command Syntax	MS704:POWer:FAIL[:COMBinaton]:TWO
Parameters	none
Examples	MS704:POW:FAIL:TWO
Query Syntax	none

MS704:POWer:FAIL:THRee

This command will run the power fail state combination operation mode 3 test.

Command Syntax	MS704:POWer:FAIL:THRee
Parameters	none
Examples	MS704:POW:FAIL:THR
Query Syntax	none

MS704:POWer:FAIL:PHASe:REVersal

This command will run the power fail state combination phase reversal test.

Command Syntax	MS704:POWer:FAIL:PHASe:REVersal
Parameters	none
Examples	MS704:POW:FAIL:PHAS:REV
Query Syntax	none

8.5.7 MS704 Transfer State Commands

Transfer state tests can be started by sending the MS704:TRAN command.

MS704:TRANsfer[:POWer][:INTerrupt]

This command will run the transfer power interrupt test.

Command Syntax	MS704:TRANsfer[:POWer][:INTerrupt]
Parameters	none
Examples	MS704:TRAN
Query Syntax	none

Appendix A : SCPI Command tree

SCPI Common Commands
- *CLS
- *ESE <value>
- *ESE?
- *ESR?
- *IDN?
- *OPC
- *OPC?
- *OPT?
- *PSC <bool>
- *PSC?
- *RCL <value>
- *RST
- *SAV <value>
- *SRE <value>
- *SRE?
- *STB?
- *TRG
- *TST?
- *WAI

ABORt

CALibrate
- :MEAS
  - :CURRent
    - SPHase
  - :VOLTage
- :PASSword
- :PHASe
- :SAVE
- [:SOURce]
  - :VOLTage

DATA | TRACe
- :CATalog?
- [:DATA] <trace_name>,<n>{,<n>}
- :DEFine <trace_name>[,<trace_name> | 1024]
- :DELete
  - [:NAME] <trace_name>
  - :ALL

DIAGnostic
- :RESet
- :TEMPerature:AMBient?

DO160
- :NORMal
  - :VOLT_FREQ
    - :MINinum
    - :MAXimum
  - :VOLTage
    - UNBalance
  - :WAVeform :DISTortion
  - :VOLTage
    - :MODulation <numeric>
    - :INTerrupt <numeric>
    - :SURGe
  - :FREQency
    - :MODulation <numeric>
    - :TRANSient
    - :VARiation
- :EMERgency
  - :VOLT_FREQ
    - :MINimum
    - :MAXimum
  - :VOLTage
    - :UNBalance
- :ABNormal stage
  - :VOLTage
    - :MINimum
    - :MAXimum
    - :UNDer
    - :OVER
    - :UNBalance
  - :FREQuency
    - :TRANsient
- :STANdard
- :GROup

INITiate
- [:IMMediate]
  - :SEQuence[1 | 3]
  - :NAME TRANsient | ACQuire
- :CONTinuous
  - :SEQuence[1] <bool>
  - :NAME TRANsient, <bool>

INSTrument
- :COUPle ALL | NONE
- :NSELect 1 | 2 | 3
- :SELect OUTPut1 | OUTPut2 | OUTPut 3

LIMit
- :CURRent
- :FREQuency:HIGH
- :FREQuency:LOW
- :PHASe
- :VOLTage:HIGH
- :VOLTage:LOW

MEASure | FETCh
- [:SCALar]
  - :CURRent
    - [:DC]?
    - :AC?
    - :ACDC?
    - :AMPLitude
      - :MAX?
      - :RESet
    - :CREStfactor?
    - :HARMonic
      - [:AMPLitude]? <n>
      - :PHASe? <n>
      - :THD?
    - :NEUTral
      - [:DC]?
      - :AC?
      - :ACDC?
      - :HARMonic
        - [:AMPLitude]? <n>
        - :PHASe? <n>
  - :FREQuency?
  - :POWer
    - [:DC]?
    - :AC
      - [:REAL]?
      - :APParent?

```
                :REACtive?
                :PFACtor?
                :TOTal?
        :VOLTage
            [:DC]?
            :AC?
            :ACDC?
            :HARMonic
                [:AMPLitude]? <n>
                :PHASe? <n>
                :THD?
    :ARRay
        :CURRent
            [:DC]?
            :HARMonic
                [:AMPLitude]? <n>
                :PHASe? <n>
            :NEUTral
                [:DC]?
                :HARMonic
                    [:AMPLitude]? <n>
                    :PHASe? <n>
        :VOLTage
            [:DC]?
            :HARMonic
                [:AMPLitude]? <n>
                :PHASe? <n>
    :THD:MODE RMSQ | FUND
```

MIL704

```
    :SSTate
        :VOLTage
            [:LEVel]
            :MODulation
            :UNBalance
        :PHASe
            [:UNBalance]
        :WAVeform
            [:DISTortion]
        :FREQuency
            [:LEVel]
            :MODulation
    :TRANsient
        :VOLTage
            [:LOW]
            :HIGH
        :FREQuency
            [:LOW]
            :HIGH
    :ABNormal
        :VOLTage
            [:UNDer]
            :OVER
        :FREQuency
            [:UNDer]
            :OVER
    :EMERgency
        :VOLTage
        :FREQuency
    :FREQuency   400HZ | 60HZ | VFRequency
    :VERSion     D | E | F
```

MS704

```
    :NORMal
        :SSLimits
            [:ALL]
            :NOMinal
            :LOW
            :HIGH
            :UNBalance
        :VOLTage
            :PHASe
                :DIFFerence
            :MODulation
            :DISTortion
                :TOTal
            :TRANsient
                [:ALL]
                :OVER
                :UNDer
                :COMBination
        :FREQuency
            :MODulation
            :TRANsient
                [:ALL]
                :OVER
                :UNDer
                :COMBination
    :POWer
        :FAIL
            [:COMBination]
                [:ALL]
                :ONE
                :TWO
            :THRee
            :PHASe
                :REVersal
    :ABNormal
        :LIMits
            [:ALL]
            :NOMinal
            :LOW
            :HIGH
        :VOLTage
            :TRANsient
                [:ALL]
                :OVER
                :UNDer
                :COMBination
        :FREQuency
            :TRANsient
                [:ALL]
                :OVER
                :UNDer
                :COMBination
    :EMERgency
        :LIMits
            [:ALL]
            :NOMinal
            :LOW
            :HIGH
    :FREQuency   60 | 360 | 400 | 600 | 800
    :GROUp       SAC | TAC | SVF | TVF | SXF
    :REVision    A | B | C | D | E | F
    :SKIP
    :STATus?
    :STEP    SINGle | CONTinuous
    :TEST:CONDition        A | .. | Z | AA | .. | ZZ
```

OUTPut

```
    [:STATe] <bool>
    :DFI
        [:STATe] <bool>
        :SOURce QUES | OPER | ESB | RQS | OFF
    :PON
        :STATe RST | RCL0
    :PROTection
        :CLEar
        :DELay <n>
```

```
    :RI
        :MODE LATCHing | LIVE | OFF
    TTLTrig
        MODE TRIG | FSTR
        [STATe] <bool>
        :SOURce BOT | EOT | LIST

PONSetup
    :CLOCk
    :PEAK:CURRent[:PROTection]
SENSe
    [:COUPle] AC | DC
    :CURRent
        :ACDC
            :RANGe
                [:UPPer] <n>
    :SWEep
        :OFFSet
            :POINts <n>
        :TINTerval <n>

[SOURce:]
    CURRent
        [:LEVel]
            [:IMMediate]
                [:AMPLitude] <n>
        :PROTection
                DELay <n>
                :STATe <bool>
    FREQuency
        [:CW | :IMMediate] <n>
            :MODE FIXed|STEP|PULSe|LIST|SENS|EXT
        :SLEW
                [:IMMediate] <n> | INFinity
                :MODE FISed | STEP | PULSe | LIST
                :TRIGgered <n> | INFinity
        :TRIGgered <n>
    FUNCtion
        [:SHAPe]
                [:IMMediate] SINusoid | SQUare |
        CSINusoid | <user>
                :MODE FIXed | STEP | PULSe | LIST
                :TRIGgered SINusoid | SQUare |
                CSINusoid | <user>
                :CSINusoid <n> [THD]
    LIST
        :COUNt <n> | INFinity
        :CURRent <n>{,<n>}
                :POINts?
        :DWELl <n>{,<n>}
                :POINts?
        :FREQuency
            [:LEVel] <n>{,<n>}
                :POINts?
            :SLEW  <n>{,<n>}
                :POINts?
        :PHASe <n>{,<n>}
                :POINts?
        :SHAPe <shape>{,<shape>}
                :POINts?
        :STEP ONCE | AUTO
        :TTLTrg <bool>{,<bool>}
        :VOLTage
            [:LEVel] <n>{,<n>}
                :POINts?
            :SLEW  <n>{,<n>}
                :POINts?
    PHASe
        [:IMMediate] <n>
        :MODE FIXed | STEP | PULSe | LIST
        :TRIGgered <n>
    PULSe
        :COUNt <n> | INFinity
        :DCYCle <n>
        :HOLD WIDTh | DCYCle
        :PERiod <n>
        :WIDTh <n>
    VOLTage
        :ALC
                [:STATe]  ON | OFF | REG
                :SOURce INT | EXT
        [:LEVel]
            [:IMMediate]
                [:AMPLitude] <n>
            :TRIGgered
                [:AMPLitude] <n>
        :SENSe
                :SOURce INT | EXT
        :MODE FIXed | STEP | PULSe | LIST
        :PROTection
                [:LEVel] <n>
        :RANGe 150 | 300
        :SLEW
                [:IMMediate] <n> | INFinity
                :MODE FIXed | STEP | PULSe | LIST
                :TRIGgered <n> | INFinity

STATus
    :OPERation
        [:EVENt]?
        :CONDition?
        :ENABle <n>
        :NTRansition <n>
        :PTRansition <n>
    :PRESet
    :QUEStionable
        [:EVENt]?
        :CONDition?
        :ENABle <n>
        :INSTrument
            :ISUMmary
                [:EVENt]?
                :CONDition?
                :ENABle <n>
                :NTRansition <n>
                :PTRansition <n>
        :NTRansition <n>
        :PTRansition <n>

SYSTem
    :CONFiguration
        :NOUTputs <n>
    :ETIMe?
    :ERRor?
    :LANGuage SCPI | APEN
    :REMote
    :RWLOCK
    :TEMPerature?
    :VERSion?

TRIGger
    [:TRANsient | SEQuence1]
        [:IMMediate]
        :SOURce BUS | EXTernal | IMMediate
        DELay <n>
    :SYNChronize | :SEQuence2
        :SOURce PHASe | IMMediate
        :PHASe <n>
    :ACQuire | :SEQuence3
        [:IMMediate]
```

```
        :SOURce BUS | EXTernal | IMMediate
    :SEQuence1
        :DEFine TRANsient
    :SEQuence2
        :DEFine SYNChronize
    :SEQuence3
        :DEFine ACQuire
```

Appendix B : SCPI Conformance Information

SCPI Version

The power source conforms to SCPI version 1992.0.

SCPI Confirmed commands

ABOR
CAL:DATA
CAL:STAT
INIT[:IMM]
INIT[:IMM]:SEQ or NAME
INIT:CONT:SEQ or NAME
INST:COUP
INST:NSEL
MEAS or FETC[:SCAL]:CURR[:DC]?
MEAS or FETC[:SCAL]:CURR:AC?
MEAS or FETC[:SCAL]:FREQ?
MEAS or FETC[:SCAL]:POW[:DC]?
MEAS or FETC[:SCAL]:POW:AC[:REAL]?
MEAS or FETC[:SCAL]:VOLT:AC?
MEAS or FETC:ARR:CURR[:DC]?
MEAS or FETC:ARR:VOLT[:DC]?
OUTP:[STAT]
OUTP:COUP
OUTP:PROT:CLE
OUTP:PROT:DEL
OUTP:TTLT:MODE
OUTP:TTLT[:STAT]
PONS:CLOC
SENSe[:COUPle]
SENSe:CURR:ACDC:RANG[:UPP]
SENS:SWE:OFFS:POIN
SENS:SWE:TINT
[SOUR:]CURR[:LEV][:IMM][:AMPL]
[SOUR:]CURR:PROT:DEL
[SOUR:]CURR:PROT:STAT
[SOUR:]FREQ[:CW or :IMM]
[SOUR:]FREQ:MODE
[SOUR:]FUNC[:SHAP][:IMM]
[SOUR:]LIST:COUN
[SOUR:]LIST:CURR
[SOUR:]LIST:CURR:POIN?
[SOUR:]LIST:DWEL
[SOUR:]LIST:DWEL:POIN?
[SOUR:]LIST:FREQ[:LEV]
[SOUR:]LIST:FREQ[:LEV]:POIN?
[SOUR:]LIST:VOLT[:LEV]
[SOUR:]LIST:VOLT[:LEV]:POIN?
[SOUR:]PHAS[:IMM]
[SOUR:]PULS:COUN
[SOUR:]PULS:DCYC
[SOUR:]PULS:HOLD
[SOUR:]PULS:PER
[SOUR:]PULS:WIDT
[SOUR:]VOLT:ALC or SENS:SOUR
[SOUR:]VOLT[:LEV][:IMM][:AMPL]
[SOUR:]VOLT[:LEV][:TRIG][:AMPL]
[SOUR:]VOLT:MODE
[SOUR:]VOLT:PROT[:AMPL]
[SOUR:]VOLT:RANG
[SOUR:]VOLT:SLEW[:IMM]
[SOUR:]VOLT:PROT:STAT
[SOUR:]VOLT:ALC or SENS:SOUR
STAT:OPER[:EVEN]?
STAT:OPER:COND?
STAT:OPER:ENAB?
STAT:OPER:NTR
STAT:OPER:PTR
STAT:PRES
STAT:QUES:
STAT:QUES[:EVEN]?
STAT:QUES:COND?
STAT:QUES:ENAB?
STAT:QUES:NTR
STAT:QUES:PTR
STAT:QUES:INST:ISUM[:EVEN]?
STAT:QUES:INST:ISUM:COND?
STAT:QUES:INST:ISUM:ENAB
STAT:QUES:INST:ISUM:NTR
STAT:QUES:INST:ISUM:PTR
SYST:ERR?
SYST:LANG
SYST:VERS?
TRAC or DATA:CAT?
TRAC or DATA[:DATA]
TRAC or DATA:DEF
TRAC or DATA:DEL[:NAME]
TRIG:SEQ<n>:DEL
TRIG:SEQ<n>[:IMM]
TRIG:SEQ<n>:SOUR
TRIG:SOUR
*CLS
*ESE *ESE? *ESR?
*IND?
*OPC *OPC? *OPT?
*PSC *PSC?
*RCL *RST
*SAV *SRE *STB?
*TRG *TST?
*WAI

Non-SCPI commands.

CAL:MEAS:CURR
CAL:MEAS:CURR:SPH
CAL:MEAS:VOLT
CAL:PASS
CAL:PHAS
CAL:SAVE
CAL:VOLT
DIAG:RES
DIAG:TEMP:AMB
DO160:ABN:FREQ:TRAN
DO160:ABN:VOLT:MAX
DO160:ABN:VOLT:MIN
DO160:ABN:VOLT:OVER
DO160:ABN:VOLT:UNB
DO160:ABN:VOLT:UND
DO160:CAT
DO160:EMER:VOLT_FREQ:MAX
DO160:EMER:VOLT_FREQ:MIN
DO160:EMER:VOLT:UNB
DO160:GRO
DO160:NORM:FREQ:MOD
DO160:NORM:FREQ:TRAN
DO160:NORM:FREQ:VAR
DO160:NORM:VOLT_FREQ: MAX
DO160:NORM:VOLT_FREQ:MIN
DO160:NORM:VOLT:INT
DO160:NORM:VOLT:MOD
DO160:NORM:VOLT:SURG
DO160:NORM:VOLT:UNB
DO160:NORM:WAV:DIST
DO160:STAN
LIM:CURR
LIM:FREQ:HIGH
LIM:FREQ:LOW
LIM:PHAS
LIM:VOLT:HIGH
LIM:VOLT:LOW
MEAS or FETC[:SCAL]:CURR:ACDC?
MEAS or FETC[:SCAL]:CURR:AMPL:MAX?
MEAS or FETC[:SCAL]:CURR:AMPL:RES
MEAS or FETC[:SCAL]:CURR:CRES?
MEAS or FETC[:SCAL]:CURR:HARM[:AMPL]?
MEAS or FETC[:SCAL]:CURR:HARM:PHAS?
MEAS or FETC[:SCAL]:CURR:HARM:THD?
MEAS or FETC[:SCAL]:CURR:NEUT[:DC]?
MEAS or FETC[:SCAL]:CURR:NEUT:AC?
MEAS or FETC[:SCAL]:CURR:NEUT:DC?
MEAS or FETC[:SCAL]:CURR:NEUT:ACDC?
MEAS or FETC[:SCAL]:CURR:NEUT:HARM[:AMPL]?
MEAS or FETC[:SCAL]:CURR:NEUR:HARM:PHAS?
MEAS or FETC[:SCAL]:POW:AC:APP?
MEAS or FETC[:SCAL]:POW:AC:REAC?
MEAS or FETC[:SCAL]:POW:AC:PFAC?
MEAS or FETC[:SCAL]:POW:AC:TOT
MEAS or FETC[:SCAL]:VOLT:ACDC?
MEAS or FETC[:SCAL]:VOLT:HARM[:AMPL]?
MEAS or FETC[:SCAL]:VOLT:HARM:PHAS?
MEAS or FETC[:SCAL]:VOLT:HARM:THD?
MEAS or FETC:ARR:CURR:HARM[:AMPL]?
MEAS or FETC:ARR:CURR:HARM:PHAS?
MEAS or FETC:ARR:CURR:NEUT[:DC]?
MEAS or FETC:ARR:CURR:NEUT:HARM[:AMPL]?
MEAS or FETC:ARR:CURR:NEUT:HARM:PHAS?
MEAS or FETC:ARR:VOLT:HARM[:AMPL]?
MEAS or FETC:ARR:VOLT:HARM:PHAS?
MEAS:THD:MODE
MIL704
MIL704:ABN:VOLT [:UNDer]
MIL704:ABN:VOLT:OVER
MIL704:ABN:FREQ [:UNDer]
MIL704:ABN:FREQ:OVER
MIL704:EMER:VOLT
MIL704:EMER:FREQ
MIL704:SST:VOLT [:LEVel]
MIL704:SST:VOLT:MOD
MIL704:SST:VOLT:UNB
MIL704:SST:PHAS[:UNB]
MIL704:SST:WAV [:DIST]
MIL704:SST:FREQ[:LEVel]
MIL704:SST:FREQ:MODulation
MIL704:TRAN:VOLT[:LOW]
MIL704:TRAN:VOLT:HIGH
MIL704:TRAN:FREQ[:LOW]
MIL704:TRAN:FREQ:HIGH
MIL704:FREQ
MIL704:VERS
MS704
MS704:NORM:SSL[:ALL]
MS704:NORM:SSL:NOM
MS704:NORM:SSL:LOW
MS704:NORM:SSL:HIGH
MS704:NORM:SSL:UNB
MS704:NORM:VOLT:PHAS:DIFF
MS704:NORM:VOLT:MOD
MS704:NORM:VOLT:DIST:TOT
MS704:NORM:VOLT:TRAN[:ALL]
MS704:NORM:VOLT:TRAN:OVER
MS704:NORM:VOLT:TRAN:UND
MS704:NORM:VOLT:TRAN:COMB
MS704:NORM:FREQ:MOD
MS704:NORM:FREQ:TRAN[:ALL]
MS704:NORM:FREQ:TRAN:OVER
MS704:NORM:FREQ:TRAN:UND
MS704:NORM:FREQ:TRAN:COMB
MS704:ABN:LIM[:ALL]
MS704:ABN:LIM:NOM
MS704:ABN:LIM:LOW
MS704:ABN:LIM:HIGH
MS704:ABN: VOLT:TRAN[:ALL]
MS704:ABN: VOLT:TRAN:OVER
MS704:ABN: VOLT:TRAN:UND
MS704:ABN: VOLT:TRAN:COMB
MS704:ABN: FREQ:TRAN[:ALL]
MS704:ABN: FREQ:TRAN:OVER
MS704:ABN: FREQ:TRAN:UND
MS704:ABN: FREQ:TRAN:COMB
MS704:EMER[:ALL]
MS704:EMER:NOM
MS704:EMER:LOW
MS704:EMER:HIGH
MS704:POW:FAIL[:COMB][:ALL]
MS704:POW:FAIL[:COMB]:ONE

MS704:POW:FAIL[:COMB]:TWO
MS704:POW:FAIL:THR
MS704:POW:FAIL:PHAS:REV
MS704:TRAN[:POW][:INT]
MS704:FREQ
MS704:GROU
MS704:REV
MS704:GROU
MS704:VERS
MS704:SKIP
MS704:STAT
MS704:STEP
MS704:TEST:COND
OUTP:DFI[:STAT]
OUTP:DFI:SOUR
OUTP:RI:MODE
OUTP:TTLT:SOUR
PONS:CLOC
PONS:PEAK:CURR[:PROT]
[SOUR:]CURR:PEAK[:IMM]
[SOUR:]CURR:PEAK:MODE
[SOUR:]CURR:PEAK:TRIG
[SOUR:]FREQ:SLEW[:IMM}
[SOUR:]FREQ:SLEW:MODE
[SOUR:]FREQ:SLEW:TRIG
[SOUR:]FREQ:TRIG
[SOUR:]FUNC[:SHAP]:CSIN
[SOUR:]FUNC[:SHAP]:MODE
[SOUR:]FUNC[:SHAP]:TRIG
[SOUR:]LIST:FREQ:SLEW
[SOUR:]LIST:FREQ:SLEW:POIN?
[SOUR:]LIST:PHAS
[SOUR:]LIST:PHAS:POIN?
[SOUR:]LIST:SHAP
[SOUR:]LIST:SHAP:POIN?
[SOUR:]LIST:STEP
[SOUR:]LIST:TTLT
[SOUR:]LIST:TTLT:POIN?
[SOUR:]LIST:VOLT:OFFS
[SOUR:]LIST:VOLT:OFFS:POIN?
[SOUR:]LIST:VOLT:SLEW
[SOUR:]LIST:VOLT:SLEW:POIN?
[SOUR:]PHAS:MODE
[SOUR:]PHAS:TRIG
[SOUR:]VOLT:ALC[:STAT]
[SOUR:]VOLT:ALC:SOUR
[SOUR:]VOLT:OFFS[:IMM]
[SOUR:]VOLT:OFFS:MODE
[SOUR:]VOLT:OFFS:TRIG
[SOUR:]VOLT:SENS[:SOUR]
[SOUR:]VOLT:SLEW:MODE
[SOUR:]VOLT:SLEW:TRIG
SYST:CONF?
SYST:CONF:NOUT?
SYST:ETIM?
SYST:LOC
SYST:REM
SYST:RWL
SYST:TEMP?
TRIG:SEQ2 or SYNC:PHAS
TRIG:SEQ:DEF

Appendix C : Error Messages

This appendix gives the error numbers and descriptions that are returned by the AC power source. Error numbers are returned in two ways:

- Error numbers are displayed on the front panel
- Error numbers and messages are read back with the “SYSTem:ERRor?” query. SYSTem:ERRor? returns the error number into a variable and returns two parameters: an NR1 and a string.

When errors occur, the Standard Event Status register records them as shown in the following table.

Bit Set	Code Error	Type
5	-100 thru -199	Command
4	-200 thru -299	Execution
3	-300 thru -399 or 1 thru 799	Device-dependent Note that errors over 800 do not set the ESR.
2	-400 thru -499	Query

Standard Event Status register error bits

The following table lists the errors that are associated with SCPI syntax errors and interface problems. It also lists the device dependent errors. Information inside the brackets is not part of the standard error message, but is included for clarification.

Some error messages are maintained for back ward compatibility with Agilent/HP 6834B models.

Number	Message String	Cause	Remedy
0	"No error"	No errors in queue	
-100	"Command error"	Unable to complete requested operation	Unit may be in a mode inconsistent with request.
-102	"Syntax error"	Command syntax incorrect.	Misspelled or unsupported command
-103	"Invalid separator"	SCPI separator not recognized	See SCPI section of programming manual.
-104	"Data type error"	Data type invaled.	Check command for supported data types
-108	"Parameter not allowed"	One or more additional parameters were received.	Check programming manual for correct number of parameters
-109	"Missing parameter"	Too few parameters received for requested operation	Check programming manual for correct number of parameters
-110	"Command header error"	Command header incorrect	Check syntax of command.
-111	"Header separator error"	Invalid command separator used.	Use semi-colon to separate command headers
-112	"Program mnemonic too long"	Syntax error	Check programming manual for correct command syntax

Number	Message String	Cause	Remedy
-113	"Undefined header"	Command not recognized error	Check programming manual for correct command syntax
-120	"Numeric data error"	Data received is not a number	Check programming manual for correct command syntax
-121	"Invalid character in number"	Number received contains non-numeric character(s)	Check programming manual for correct command syntax
-123	"Exponent too large"	Exponent in number exceeds limits	Check programming manual for correct parameter range
-128	"Numeric data not allowed"	Number received when number is not allowed.	Check programming manual for correct command syntax
-168	"Block data not allowed"	Block data was sent.	Check programming manual for correct command syntax
-200	"Execution error"	Command could not be executed	Command may be inconsistent with mode of operation.
-201	"Invalid while in local"	Command issued but unit is not in remote state	Put instrument in remote state before issuing GPIB commands.
-203	"Command protected"	Command is locked out	Some commands are supported by the unit but are locked out for protection of settings and are not user accessible.
-210	"Trigger error"	Problem with trigger system.	Unit could not generate trigger for transient execution or measurement.
-211	"Trigger ignored"	Trigger request has been ignored.	Trigger setup incorrect or unit was not armed when trigger was received. Check transient system or measurement trigger system settings.
-213	"Init ignored"	Initialization request has been ignored	Unit was told to go to armed state but was unable to do so. Could be caused by incorrect transient system or measurement acquisition setup.
-220	"Parameter error"	Parameter not allowed.	Incorrect parameter or parameter value. Check programming manual for allowable parameters
-221	"Setting conflict"	Transient programmed with more than 1 mode.	Check other settings. E.g. Redefine transient mode. As result of *TST? execution, indicates ALC mode is off or waveform not set to Sine.
-222	"Data out of range"	Parameter data outside of allowable range.	Check programming manual for allowable parameter values
-223	"Too much data"	More data received than expected	Check programming manual for number of parameters or data block size
-224	"Illegal parameter value"	Parameter value is not suppored	Check programming manual for correct parameters
-226	"Lists not same length"	One or more transient lists programmed has different length.	All lists must be of same length or transient cannot be compiled and executed.

Number	Message String	Cause	Remedy
-241	"Hardware missing"	N/A	N/A
-254	"Media full"	No storage space left to save settings or data.	Delete other settings or data to make room.
-255	“Directory full”	Too many waveform directory entries	Delete one or more waveforms from waveform memory to make room.
-256	“File name not found”	Waveform requested not in directory	Check waveform directory for waveform names present.
-257	“File name error”	Incorrect filename	Too many or non ASCII characters used in waveform file definition.
-283	“Illegal variable name”	Variable name illegal.	Use ASCII characters only
-300	"Device specific error"	Hardware related error	Check hardware for proper operation.
-311	"Memory error"	Waveform memory checksum error.	May be the result of incomplete user-defined waveform download. Check interface and try downloading waveform again. Successful download may clear this error condition. Alternatively, use TRAC:DEL:ALL command to clear waveform memory.
-314	"Save/recall memory lost"	User setup register contents lost	Store setup in same register again.
-315	"Configuration memory lost"	Hardware configuration settings lost.	Contact CI service department at support@calinst.com to obtain instructions on restoring configuration data.
-330	"Self-test failed"	Internal error	Contact CI service department at support@calinst.com
-350	"Queue overflow"	Message queue full.	Too many message. Read status using SYST:ERR query until 0, "No Error" is received indicating queue empty.
-400	"Query error"	Unable to complete query.	Check programming manual for correct query format and parameters
-410	"Query INTERRUPTED"	Query issued but response not read.	Check application program for correct flow. Response must be read after each query to avoid this error.
-420	"Query UNTERMINATED"	Query incomplete.	Check for terminator after query command.
-430	"Query DEADLOCKED"	Query cannot be completed	Check application program for multiple queries
-440	"Query UNTERMINATED"	Query incomplete.	Check for terminator after query command.
0	"No error"	No errors in queue	
2	" Non-volatile RAM CONFIG section checksum failed"	Controller failure during Self-test.	Contact CI service department at support@calinst.com
3	" Non-volatile RAM CAL section checksum failed"	Controller failure during Self-test.	Contact CI service department at support@calinst.com
4	" Non-volatile RAM	Controller failure	Contact CI service department at

Number	Message String	Cause	Remedy
	WAVEFORM section checksum failed"	during Self-test.	support@calinst.com
10	"Ram self test	Controller failure during Self-test.	Contact CI service department at support@calinst.com
40	"Voltage self test error, output 1	No. 1/A amplifier in Master source has no output during Self-test.	Contact CI service department at support@calinst.com
41	"Voltage self test error, output 2	No. 2/B amplifier in Master source has no output during Self-test	Contact CI service department at support@calinst.com
42	"Voltage self test error, output 3	No. 3/C amplifier in Master source has no output during Self-test	Contact CI service department at support@calinst.com
43	"Current self test error, output 1	No. 1/A amplifier in Aux. Source has no output during Self-test.	Contact CI service department at support@calinst.com
44	"Current self test error, output 2	No. 2/B amplifier in Aux. Source has no output during Self-test.	Contact CI service department at support@calinst.com
45	"Current self test error, output 3	No. 3/C amplifier in Aux. Source has no output during Self-test.	Contact CI service department at support@calinst.com
216	" RS-232 receiver framing error"	Communication failure.	Check RS232 port settings and cable.
217	" RS-232 receiver parity error"	Communication failure.	Check RS232 port settings and cable.
218	" RS-232 receiver overrun error"	Communication failure.	Check RS232 port settings and cable.
402	"CAL password is incorrect"	Calibration password does not equal high voltage range value.	Re-enter correct password.
403	"CAL not enabled"	No password entered for calibration	Enter correct CAL password.
600	"Systems in mode:list have different list lengths"	Transient lists have unequal lengths	Check list settings and correct to same no of data points.
601	"Requested voltage and waveform exceeds peak voltage capability"	Wave shape selected and RMS voltage combine to exceed peak voltage capability.	Reduce RMS or crest factor of wave shape.
602	"Requested voltage and waveform exceeds transformer volt-second rating"	The selected wave shape exceeds output transformer capability.	The volt-second product of he wave form (magnitude and time in the + and – half of wave form).
603	"Command only applies to RS-232 interface"	Command not relevant for GPIB interface.	Do not use command.

Number	Message String	Cause	Remedy
604	"Trigger received before requested number of pre-trigger readings"	Data acquisition pre-trigger buffer not filled yet.	Hold off trigger or reduce pre-trigger delay.
605	"Requested RMS current too high for voltage range"	Max RMS current is function of voltage range selected.	Reduce programmed RMS current limit or select low voltage range.
606	"Waveform data not defined"	No waveform name specified	Specify waveform name before sending waveform data.
607	"VOLT,VOLT:SLEW, and FUNC:SHAPe modes incompatible"	Conflict between wave shape and programmed slew	Reduce slew or change waveform type.
608	"Measurement overrange"	Measurement data out of range.	
609	"Output buffer overrun"	Too much data in output buffer.	Check receive mode on application program. Program is not reading data sent by AC source.
610	"Command cannot be given with present SYST:CONF setting"	Command conflicts with available hardware or firmware option settings.	Check configuration for available options and features.
801	"Output volt fault"	- Output voltage does not match program value when ALC is on. - Over load - Voltage kick-back - No output voltage	Load exceeds current limit and unit is in Constant Voltage (CV) mode of operation. Reduce load or increase CL setting. Output voltage is driven above programmed voltage by external influence (Load, voltage kickback, etc.)
802	"Current limit fault"	Current limit exceeded.	Load exceeds current limit and unit is in Constant Voltage (CV) mode of operation. Reduce load or increase CL setting
803	"Temperature fault"	Amplifier heat sink temp. too high.	Reduce load. Ensure proper air flow and exhaust clearance. Check fan(s) for operation.
804	"External sync. error"	Could not sync to external sync signal.	External sync signal missing, disconnected or out of range.
805	"Initial memory lost"	Initial settings could not be recalled at power-up.	Save power on settings again to overwrite old content.
806	"Limit memory lost"	Hardware configuration settings could not be recalled at power-up.	Contact CI service department at support@calinst.com to obtain instructions on restoring configuration data.
807	"System memory lost"	Memory corrupted during power-up.	Recycle power.
808	"Calibration memory lost"	Calibration data lost during power-up.	Contact CI service department at support@calinst.com to obtain instructions on restoring calibration data or recalibrate unit.
813	"Missing list parameter"	One or more transient list parameters missing.	Check programmed lists.

Number	Message String	Cause	Remedy
814	"Voltage peak error "	Peak voltage exceeds internal bus voltage	This error may occur when selecting user defined wave shapes with higher crest factors. Reduce programmed RMS value.
815	"Slew time exceed dwell"	Time needed to slew to final value is less than dwell time.	Check dwell times in transient list settings. Increase dwell time or change slew rate for affected parameter.
816	"Illegal during transient"	Operation requested not available while transient is running.	Wait till transient execution is completed or abort transient execution first.
817	"Output relay must be closed"	Transient programmed with output relay open.	Close relay before attempting transient operation.
819	"Clock and sync must be internal"	Operation not possible with external clock	Switch to internal sync. (Default)
820	"Input buffer full"	Too much data received.	Break up data in smaller blocks.
821	"Amplifier unbalance"	Hardware error. An amplifier has an overload condition.	Check amplifier balance adjustment. If error persists contact CI service at support@calinst.com .
822	"Waveform harmonics limit"	Harmonic contents of user defined wave shape is too high and could damage amplifier output stage.	Reduce harmonic content or reduce fundamental frequency programmed.
823	"Amplifier fault"	An amplifier failure. Can be reported at any time.	Determine which amplifier is at fault with self-test or checking LED on Relay Board. Replace amplifier.
824	“Auxiliary down”	One or more auxiliary units is not powered up or not working.	Turn on all auxiliary units.
825	“Over voltage prot trip”	Over voltage detected on output	Check output voltage for correct RMS value.
826	“Peak current prot trip”	Peak current limit exceeded.	Peak current exceeded. Could be caused by switching EUT on or off.
827	“Frequency error”	Frequency error during self-test.	Correct frequency was not measured during self-test. May be result of 801 error.
828	“Phase error”	Self test error phase angle	Correct phase angle was not measured during self-test. May be result of 801 error.
829	“Dc component exceed limit”	Too much DC content in loaded ARB waveform.	Check waveform programming.

Table 8-8: SCPI error codes and messages.

Appendix D : iL Series / HP6834B Compatability

This appendix summarizes difference between the old iL Series and HP6834B AC power sources and the Lx Series with respect to bus programming. The Ls Series is not recommended as a replacement for iL/HP6834B power sources.

The iL Series AC source products used an Agilent designed DSP controller board. This controller is identical to the one used in the Agilent 6834B products. Both product lines have been discontinued.

The Lx Series uses a newer California Instruments designed DSP controller. Every effort was made to maintain backward compatibility with the iL/HP series over the bus. However, some inherent hardware differences between the two controller designs make it impossible to maintain 100% bus compatability. The known differences are outline here for reference. California Instruments strives to provide as comprehensive a level of information on this issue as possible. However, other incompatibilities may exist that have not been uncovered. For technical support or to report compatibility issues, contact support@calinst.com.

Device Identification (*IDN? response)

The *IDN? response will be similar in structure but different in content. The following *IDN? responses apply to each model series.

Model	*IDN? Response	Comment
4500iL	CALIFORNIA INSTRUMENTS,4500IL,0,A.00.04	
6834B	HP,6834B,0,A.00.04	
4500Lx	“California Instruments,4500Lx,54321,Rev1.13”	Note double quotes

If existing test programs or drivers have to be used without modification, it is possible to change the Lx Series IDN model number response by using the following command.

Command	Comment
SYST:OEM “HP”	‘ Changes Manufacturer
SYST:MODEL “4500iL”	‘ Changes model number

This will change the model number to the string specified between quotation marks. Note that this will make it more difficult to tell the 4500Lx from an actual 4500iL over the bus so this approach should be avoided if possible.

Calibration Subsystem

The Lx controller hardware is functionally equivalent to the iL controller but uses a more advanced calibration mechanism. This makes it impossible to support to iL’s SCPI calibration subsystem. Those calibration commands that exist on both units are listed in the table below.

iL / HP6834B			Lx Equivalent	Comment
CALibrate	:CURRent	:AC	N/A	Error –113, Undefined Error.
		:MEAS	N/A	Error –113, Undefined Error.
	:DATA	<n>	N/A	Error –113, Undefined Error.
	:IMPedance		N/A	Error –113, Undefined Error.
	:LEVel	<level>	N/A	Error –113, Undefined Error.

iL / HP6834B			Lx Equivalent	Comment
	:PASSword	<n>	same	Both units use same syntax but different impact: Lx password is always the high voltage range limit value. iL/HP password is default 0 (no cal password needed). This command can be used to change the cal password.
	:SAVE		same	Same.
	:STATE	<bool>| <,n>	N/A	Error –113, Undefined Error.
	:VOLTage	:AC	N/A	Error –113, Undefined Error.
		:PROTection	N/A	Error –113, Undefined Error.

Automated calibration software programs written for the iL/HP Series will have to be modified to work with an Lx Series power source.

Diagnostic Subsystem

The iL/HP diagnostic subsystem is closely related to the old controller hardware. There is no equivalent for most of the DIAGnostic commands on the Lx controller but no errors will be generated. Instead, the Lx will treat most of these commands as a NOP.

iL / HP6834B			Lx Equivalent	Comment
DIAGnostic	:CURRent?		Nop	Returns empty response.
	:EEPRom	<n>,<n>,<n	Nop	NOP
	:FAN	:MODE	AUTO | MANual	NOP. Lx Fan speed is always in AUTO mode.
		:SPEed:AUTO?	N/A	Returns empty response.
		:SPEED:MANUAL	Nop	NOP
	:NOP		??	
	:RESet		Same	See Lx Diagnostic subsystem
	:Rwlongform	<n>	Nop	NOP
	:TEMPerature	:AMBient?	Same	See Lx Diagnostic subsystem

Display Subsystem

The Display subsystem is not supported on the Lx Series as both units have different types of displays. The iL/HP has a 16 character single line display, the Lx a 2x16 character line display. The Lx only supports the NORMAL display mode.

iL / HP6834B			Lx Equivalent	Comment
DISPlay	[:WINDow}	[:STATe]	N/A	Error –113, Undefined Error.
		:MODE	N/A	Error –113, Undefined Error.
		:TEXT[:DATA]		Error –113, Undefined Error.

Attempts to send DISPLay commands will result in Error –113, “Undefined Header” errors.

Index

***

*CLS 94
*ESE 94
*ESR? 94
*IDN? 95
*OPC 95
*OPT? 95
*PSC 95
*RCL 96
*RST 97
*SAV 98
*SRE 98
*STB? 98
*TRG 99
*TST? 99
*WAI 100

A

ABORt 88
address
  IEEE 10
APE
  compatibility 138
  IEEE488.2 common commands 137

B

Bus speed
  delays 123

C

CALibrate:MEASure:CURRent 22
CALibrate:MEASure:CURRent:SPHase 22
CALibrate:MEASure:VOLTage 22
CALibrate:PASSword 23
CALibrate:SAVE 23
CALibrate[:SOURce]:PHASe 23
CALibrate[:SOURce]:VOLTage 23
command
  subsystem 21
Command
  delays 123
commands
  common 13
  coupled 14
Conventions 11
Copyright 2
coupling 14
CURRent 51
CURRent:PROTection:DELay 51
CURRent:PROTection:STATe 52

D

DATA 86
DATA:CATalog 87
DATA:DEFine 87
DATA:DELete 87
DATA:DELete:ALL 87
DO160:ABNormal:FREQuency:TRANsient ... 162
DO160:ABNormal:VOLTage:MAXimum 161
DO160:ABNormal:VOLTage:MINimum 161
DO160:ABNormal:VOLTage:OVER 161
DO160:ABNormal:VOLTage:UNBalance 161
DO160:ABNormal:VOLTage:UNDer 161
DO160:EMERgency:VOLT_FREQ:MAXimum
  160
DO160:EMERgency:VOLT_FREQ:MINimum 160
DO160:EMERgency:VOLTage:UNBalance ... 160
DO160:GROup 162
DO160:NORMal:FREQuency:MODulation 158
DO160:NORMal:FREQuency:TRANsient 158
DO160:NORMal:FREQuency:VARiation 159
DO160:NORMal:VOLT_FREQ: MAXimum 157
DO160:NORMal:VOLT_FREQ:MINimum 157
DO160:NORMal:VOLTage:INTerrupt 158
DO160:NORMal:VOLTage:MODulation 157
DO160:NORMal:VOLTage:SURGe 158
DO160:NORMal:VOLTage:UNBalance 157
DO160:NORMal:WAVeform:DISTortion 157
DO160:STANdard 162

E

Ext. Trigger 46

F

FETCh:ARRay:CURRent:HARMonic:PHASe? 29
FETCh:ARRay:CURRent:HARMonic? 28
FETCh:ARRay:CURRent:NEUTral:HARMonic:P
  HASe? 30
FETCh:ARRay:CURRent:NEUTral:HARMonic?
  30
FETCh:ARRay:CURRent:NEUTral? 29
FETCh:ARRay:CURRent? 28
FETCh:ARRay:VOLTage:HARMonic? 32
FETCh:ARRay:VOLTage? 32
FETCh:CURRent:AC? 33
FETCh:CURRent:ACDC? 34
FETCh:CURRent:AMPLitude:MAXimum? 34
FETCh:CURRent:AMPLitude:RESet 34
FETCh:CURRent:CREStfactor? 34
FETCh:CURRent:HARMonic:PHASe? 35
FETCh:CURRent:HARMonic:THD? 35
FETCh:CURRent:HARMonic? 35
FETCh:CURRent:NEUTral:AC? 36
FETCh:CURRent:NEUTral:ACDC? 36
FETCh:CURRent:NEUTral:HARMonic:PHASe?
  37
FETCh:CURRent:NEUTral:HARMonic? 36
FETCh:CURRent:NEUTral? 36
FETCh:CURRent? 33
FETCh:FREQuency? 38
FETCh:POWer:AC:APParent? 39

FETCh:POWer:AC:PFACtor? 40
FETCh:POWer:AC:REACtive? 40
FETCh:POWer:AC:TOTal?.....40
FETCh:POWer:AC?.....39
FETCh:POWer?.....39
FETCh:VOLTage:AC? 41
FETCh:VOLTage:ACDC? 41
FETCh:VOLTage:HARMonic:PHASe? 42
FETCh:VOLTage:HARMonic:THD?.....42
FETCh:VOLTage:HARMonic? 42
FETCh:VOLTage? 41
firmware
updates 10
format
waveform data 30
formats
data.....17
FREQency:SLEW:TRIGgered.....54
FREQuency.....53
FREQuency:MODE 53
FREQuency:SLEW 54
FREQuency:SLEW:MODE.....54
FREQuency:TRIGgered 55
FUNCtion.....56
Function Strobe 46
FUNCtion:CSINusoid 57
FUNCtion:MODE.....56
FUNCtion:TRIGgered.....57

H

header
optional 15
separator.....15
Header 12
headers
optional.....13
Headers.....15
HP82335A 19

I

IEEE 8
setting address 10
IEEE-488
controller cards 19
IEEE488.2 common commands
APE.....137
Initialization.....101
INITiate:CONTinuous:NAME 89
INITiate:CONTinuous:SEQuence 89
INITiate:NAME 89
INITiate:SEQuence 89
INSTrument:COUPle.....25
INSTrument:NSELect.....25
INSTrument:SELect 25

L

L Series
APE 138
LIMit: VOLTage:HIGH.....27
LIMit: VOLTage:LOW 27
LIMit:CURRent.....26
LIMit:FREQuency:HIGH.....26
LIMit:FREQuency:LOW 26
LIMit:PHASe.....26
LIST:COUNt.....60
LIST:DWELl 60
LIST:DWELl:POINts? 60
LIST:FREQuency.....60
LIST:FREQuency:POINts? 61
LIST:FREQuency:SLEW.....61
LIST:FREQuency:SLEW:POINts?.....61
LIST:PHASe.....61
LIST:PHASe:POINts? 62
LIST:SHAPe.....62
LIST:SHAPe:POINts? 62
LIST:STEP 63
LIST:TTLTrg 63
LIST:TTLTrg:POINts?.....63
LIST:VOLTage 63
LIST:VOLTage:POINts? 64
LIST:VOLTage:SLEW.....64
LIST:VOLTage:SLEW:POINts? 64

M

MEASure:ARRay:CURRent:HARMonic:PHASe?
.....29
MEASure:ARRay:CURRent:HARMonic?.....28
MEASure:ARRay:CURRent:NEUTral:HARMonic:
PHASe?.....30
MEASure:ARRay:CURRent:NEUTral:HARMonic
?.....30
MEASure:ARRay:CURRent:NEUTral?" 29
MEASure:ARRay:CURRent? 28
MEASure:ARRay:MODe 30
MEASure:ARRay:VOLTage:HARMonic?.....32
MEASure:ARRay:VOLTage? 32
MEASure:CURRent:AC? 33
MEASure:CURRent:ACDC? 34
MEASure:CURRent:AMPLitude:MAXimum? ...34
MEASure:CURRent:AMPLitude:RESet 34
MEASure:CURRent:CREStfactor? 34
MEASure:CURRent:HARMonic:PHASe? 35
MEASure:CURRent:HARMonic:THD?.....35
MEASure:CURRent:HARMonic? 35
MEASure:CURRent:NEUTral:AC? 36
MEASure:CURRent:NEUTral:ACDC? 36
MEASure:CURRent:NEUTral:HARMonic:PHASe
?.....37
MEASure:CURRent:NEUTral:HARMonic? 36
MEASure:CURRent:NEUTral? 36
MEASure:CURRent? 33

MEASure:FREQuency? 38
MEASure:POWer:AC:APParent?.....39
MEASure:POWer:AC:PFACtor? 40
MEASure:POWer:AC:REACtive? 40
MEASure:POWer:AC:TOTal?.....40
MEASure:POWer:AC?.....39
MEASure:POWer?.....39
MEASure:THDistortion:MODE 37, 43
MEASure:VOLTage:AC?.....41
MEASure:VOLTage:ACDC? 41
MEASure:VOLTage:HARMonic:PHASe?.....42
MEASure:VOLTage:HARMonic:THD?.....42
MEASure:VOLTage:HARMonic? 42
MEASure:VOLTage?.....41
MIL704:ABNormal :FREQuency :OVER 168
MIL704:ABNormal :FREQuency [:UNDer] 167
MIL704:ABNormal :VOLTage:OVER 167
MIL704:ABNormal :VOLTage[:UNDer] 167
MIL704:EMERgency :FREQuency.....168
MIL704:EMERgency :VOLTage 168
MIL704:FREQuency.....164
MIL704:SSTate: FREQuency [:LEVel] 166
MIL704:SSTate: FREQuency:MODulation.....166
MIL704:SSTate: UNBalance 165
MIL704:SSTate: WAVeform [:DISTortion] 166
MIL704:SSTate:MODulation 165
MIL704:SSTate:PHASe[:UNBalance] 165
MIL704:SSTate:VOLTage[:LEVel] 165
MIL704:TRANsient:FREQuency :HIGH 167
MIL704:TRANsient:FREQuency [:LOW].....167
MIL704:TRANsient:VOLTage:HIGH 166
MIL704:TRANsient:VOLTage[:LOW] 166
MIL704:VERSion.....164
MS704:ABNormal:
FREQuency:TRANsient:COMBination 180
MS704:ABNormal:
FREQuency:TRANsient:OVER.....179
MS704:ABNormal:
FREQuency:TRANsient:UNDer.....179
MS704:ABNormal:
FREQuency:TRANsient[:ALL] 179
MS704:ABNormal:LIMits:HIGH.....178
MS704:ABNormal:LIMits:LOW.....178
MS704:ABNormal:LIMits:NOMinal.....178
MS704:ABNormal:LIMits[:ALL].....178
MS704:ABNormal:VOLTage:TRANsient:COMBi
nation 179
MS704:ABNormal:VOLTage:TRANsient:OVER
.....179
MS704:ABNormal:VOLTage:TRANsient[:ALL]
.....178
MS704:EMERgency:LIMIit:LOW 181
MS704:EMERgency:LIMit:HIGH 181
MS704:EMERgency:LIMit:NOMinal 181
MS704:EMERgency:LIMit[:ALL].....180
MS704:FREquency 172
MS704:GROUp.....172
MS704:NORMal: FREQuency:MODulation ... 177
MS704:NORMal:
FREQuency:TRANsient:COMBination 177
MS704:NORMal: FREQuency:TRANsient:OVER
..... 177
MS704:NORMal:
FREQuency:TRANsient:UNDer 177
MS704:NORMal: FREQuency:TRANsient[:ALL]
..... 177
MS704:NORMal:SSLimits:HIGH..... 175
MS704:NORMal:SSLimits:LOW 175
MS704:NORMal:SSLimits:NOMinal..... 175
MS704:NORMal:SSLimits:UNBalance 175
MS704:NORMal:SSLimits[:ALL] 175
MS704:NORMal:VOLTage:DISTortion:TOTal176
MS704:NORMal:VOLTage:MODulation 176
MS704:NORMal:VOLTage:PHASe:DIFFerence
..... 176
MS704:NORMal:VOLTage:TRANsient:COMBina
tion..... 177
MS704:NORMal:VOLTage:TRANsient:OVER
..... 176
MS704:NORMal:VOLTage:TRANsient:UNDer
..... 176, 179
MS704:NORMal:VOLTage:TRANsient[:ALL]. 176
MS704:POWer:PHASe:REVersal..... 182
MS704:POWer:THRee 182
MS704:POWer[
\COMBination]:ONE 181
\COMBination]:TWO 182
\COMBination][:ALL]..... 181
MS704:REVision..... 173
MS704:SKIP..... 173
MS704:STATus?..... 173
MS704:STEP 173
MS704:TEST
CONDition 174
MS704:TRANsfer[
\POWer][:INTerrupt] 182

N

National Instruments
PCI-GPIB..... 19

O

OUTPut 44
OUTPut:DFI 44
OUTPut:DFI:SOURce 45
OUTPut:PON:STATe 45
OUTPut:PROTection:CLEar 45
OUTPut:PROTection:DELay..... 46
OUTPut:RI:MODE..... 46
OUTPut:TTLTrg:MODE 46
OUTPut:TTLTrg:SOURce..... 47
OUTPut:TTLTrg[:STATe]..... 47

P

PHASe....65
PHASe:MODE....65
PHASe:TRIGgered....65
PONSetup:CLOCk....48
PONSetup:PEAK:CURRent[:PROTection]....48
programming....19
PULSe:COUNt....67
PULSe:DCYCle....67
PULSe:HOLD....67
PULSe:PERiod....68
PULSe:WIDTh....68

Q

queries....14

R

root....16
Root....12
root specifier....16

S

SCPI....11
Command Tree....12
message....11
message unit....14
program message....11
response message....11
structure....14
selftest....99
SENSe:SWEep:OFFSet....49
SENSe:SWEep:OFFSet:POINts....49
SENSe:SWEep:TINTerval....50
SENSe[:COUPle]....49
Separator....15
STATus:OPERation:CONDition?....77
STATus:OPERation:ENABle....77
STATus:OPERation:NTR
STATus:OPERation:PTR....77
STATus:OPERation?....77
STATus:PRESet....76
STATus:QUEStionable:CONDition?....79
STATus:QUEStionable:ENABle....79
STATus:QUEStionable:INSTrument:ISUMmary:
CONDition?....81
STATus:QUEStionable:INSTrument:ISUMmary:
ENABle....81
STATus:QUEStionable:INSTrument:ISUMmary:
NTR....81
STATus:QUEStionable:INSTrument:ISUMmary:
PTR....81
STATus:QUEStionable:INSTrument:ISUMmary?
....80
STATus:QUEStionable:NTR
STATus:QUEStionable:PTR....79
STATus:QUEStionable?....78
SYSTem:CONFiguration....83
SYSTem:CONFiguration:NOUTputs....83
SYSTem:ERRor?....84
SYSTem:ETIMe?....83
SYSTem:LANGuage....84
SYSTem:LOCal....84
SYSTem:REMote....84
SYSTem:RWLock....84
SYSTem:TEMPerature?....85
SYSTem:VERSion?....85

T

Table of Contents....5
Table of Figures....7
Table of Tables....7
terminator....16
TRACe....86
TRACe:CATalog....87
TRACe:DEFine....87
TRACe:DELete....87
TRACe:DELete:ALL....87
TRIGger....90
TRIGger:ACQuire....91
TRIGger:ACQuire:SOURce....92
TRIGger:DELay....90
TRIGger:SEQuence1:DEFine....92
TRIGger:SEQuence2:DEFine....92
TRIGger:SEQuence2:PHASe....91
TRIGger:SEQuence2:SOURce....91
TRIGger:SEQuence3....91
TRIGger:SEQuence3:DEFine....92
TRIGger:SEQuence3:SOURce....92
TRIGger:SOURce....90
TRIGger:SYNCHronize:PHASe....91
TRIGger:SYNChronize:SOURce....91

U

User manual....10
User's Manual....8

V

VB sample
waveform conversion....31, 119
VOLTage....71
VOLTage:ALC:SOURce....71
VOLTage:ALC[:STATe]....70
VOLTage:MODE....72
VOLTage:PROTection....73
VOLTage:RANGe....73
VOLTage:SENSe:SOURce....74
VOLTage:SLEW....74
VOLTage:SLEW:MODE....75
VOLTage:SLEW:TRIGgered....75
VOLTage:TRIGgered....72

W

waveform
data format modes 31, 119

Cal Power
Via Acquanera, 29 22100 COMO
tel. 031.526.566 (r.a.) fax 031.507.984
info@calpower.it www.calpower.it