IntelliShield

Rugged Uninterruptible Power Supply

In today's dynamic and demanding environments, reliable power is non-negotiable. The IntelliShield Rugged UPS stands up against the elements, delivering uninterrupted power protection in the face of harsh conditions and extreme circumstances. With a proven track record in critical military and industrial applications, IntelliShield provides unwavering reliability when failure is not an option.

Features

- **Online double-conversion technology:** Ensures continuous, clean power by converting incoming AC to DC and then back to AC, providing the highest level of power protection with zero transfer time during power interruptions or fluctuations.
- **Flexible input voltage:** Accepts 108 to 264 VAC, allowing seamless operation in nearly any location worldwide.
- **Wide input frequency range:** Operates with an input frequency range of 47-440 Hz, ensuring compatibility with various power sources.
- **High power density:** 3 kilowatts in a 2U form factor with hot-swap battery drawer.
- **Low total harmonic distortion (THD):** Clean power output with low THD, ideal for sensitive equipment.
- **Battery options:** Choose between VRLA (Valve-Regulated Lead-Acid) or $LiFePO_4$ (lithium iron phosphate) batteries to suit your specific application needs and preferences.
- **Optional external battery packs:** Available for extended run time requirements, providing additional power backup flexibility.
- **Customizable connectors:** Input and output connectors are selectable at the time of order, with options for circular MIL-spec connectors terminal strips.
- **Integrated SNMP for remote monitoring:** Built-in SNMP interface for seamless remote monitoring and management.
- **Rugged design:** Engineered to meet stringent military standards, including MIL-STD-810, MIL-STD-461, and MIL-STD-1399-300B, ensuring reliable performance in harsh environments.
- **Compliance:** CE marked for compliance with European safety, health, and environmental requirements.

Cal Power

Via Acquanera, 29 22100 COMO
tel. 031.526.566 (r.a.) fax 031.507.984
info@calpower.it www.calpower.it

Introducing the IntelliShield UPS Family – a robust and reliable line of Uninterruptible Power Supplies designed to safeguard your critical equipment against power disruptions. Available in configurable 3 kW and 5 kW models, IntelliShield offers superior performance, reliability, and scalability for diverse applications. For these reasons, IntelliShield is the clear choice:

Built to Endure

Engineered with military-grade durability, the IntelliShield Series Rugged UPS is designed to withstand the toughest conditions, including extreme temperatures, humidity, dust, and vibration, ensuring uninterrupted operation in any environment.

Mission-Critical Reliability

With a proven track record in critical military and industrial applications, IntelliShield provides unwavering reliability when failure is not an option.

Seamless Integration

The IntelliShield can be easily and seamlessly integrated into your existing infrastructure with confidence. Our units are designed for easy installation and compatibility with a wide range of equipment, ensuring a smooth transition and minimal downtime.

Extended Power Backup

Featuring extended battery backup capabilities, IntelliShield ensures your operations stay online during prolonged outages, giving you the time needed to safely shut down systems or maintain productivity until power is restored.

Peace of Mind Support

Backed by our dedicated customer support team, you can trust that help is always just a call away. From initial installation to End-of-Life, we're here to ensure your Rugged UPS delivers peak performance when you need it most.

With the IntelliShield Series UPS, you're not just getting a power protection solution — you're investing in peace of mind, reliability, and continuity for your most critical operations, no matter where they take you.

Phone: +1 714-921-1580 • sales.intellipower@ametek.com

Applications

Industrial

Manufacturers, refineries, processing plants, and other industrial facilities where power disruptions can lead to production downtime, equipment damage, or safety hazards. Rugged UPS units are essential for maintaining continuous operation in rugged industrial environments.

Military and Defense

Military installations, field operations, C5ISR centers, and defense applications where reliable power is essential for mission-critical operations. Rugged UPS units are designed to withstand harsh conditions and provide uninterrupted power for sensitive military equipment and communications systems.

IT Infrastructure

Telecommunications networks, remote cell towers, and edge data centers where uninterrupted power is essential for maintaining communication infrastructure. Rugged UPS units ensure reliable power protection in remote or outdoor locations exposed to environmental hazards.

Transportation and Logistics

Transportation hubs, airports, seaports, railways, and other critical transportation infrastructure where power reliability is crucial for operational efficiency and safety. Rugged UPS units provide backup power for essential systems such as traffic control, navigation, and security.

Oil and Gas

Offshore platforms, drilling rigs, and remote oil and gas facilities where reliable power protection is vital for safety and productivity. Rugged UPS units are designed to withstand harsh offshore conditions and provide backup power for critical equipment and systems.

Mining and Extraction

Mining operations, extraction sites, and remote mining facilities where reliable power is essential for safety, equipment operation, and productivity. Rugged UPS units protect against power disruptions and voltage fluctuations in rugged mining environments.

Outdoor and Remote Installations

Remote monitoring stations, weather stations, environmental monitoring sites, and other outdoor installations where reliable power is needed in harsh or off-grid locations. Rugged UPS units provide backup power for essential equipment in remote environments.

Rear Panel Features

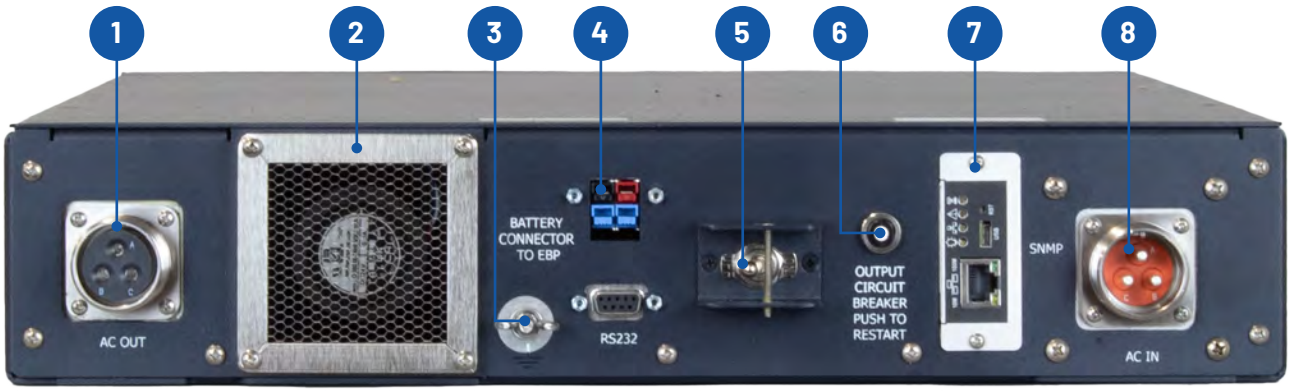

1. **AC Output Connector:** A rugged female connector built to deliver reliable AC power output, compliant with stringent military standards.
2. **Ventilation exhaust fan:** Ensures efficient cooling by expelling heat from the rear panel, maintaining optimal operating temperatures.
3. **Earth Ground Stud:** Provides a secure connection point for grounding the electrical system to ensure safety and compliance.
4. **External Battery Pack (EBP) Interface:** For extended run times.
5. **Neutral Bond Switch:** Selects Neutral grounded or floating; the factory default is for neutral to be bonded to ground.
6. **Output Circuit Breaker:** Isolates the output in the event of an output load fault; push to restart once the overload condition is relieved.
7. **SNMP Interface:** 10 Mbps 8P8C RJ-45 Ethernet port proving monitoring and control.
8. **AC Input Connector:** Durable, military-grade male connector designed for dependable AC power input under harsh conditions.

Monitoring and Control Interface

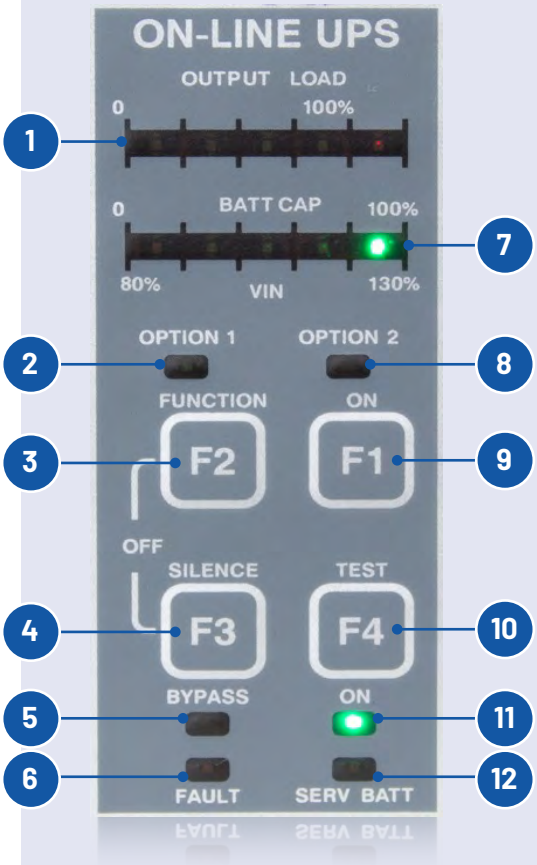

1. **Output load meter:** Positions 1-4 are green LEDs representing 25% of the rated output. Position 5 is red, indicating an overload condition is present.
2. **Option 1 LED:** Reserved for custom configurations.
3. **F2 Function button:** Enables different operational functions when pressed in combination with F1, F3, or F4.
4. **F3 Silence button:** Silences the audible alarm.
5. **Bypass LED:** Indicates when the rugged UPS is in Bypass Mode, meaning the system is routing power directly from the grid to the output, bypassing the UPS' internal power conditioning systems.
6. **Fault LED:** Indicates an inverter fault. The UPS enters Bypass Mode to allow for a graceful shutdown.
7. **Battery capacity meter:** Indicates the battery capacity. Flashes to indicate that the unit is on battery.
8. **Option 2 LED:** Reserved for custom configurations.
9. **F1 ON button:** Press to turn the inverter on. Voltage will be present at the output of the UPS.
10. **F4 Test button:** Local panel test helps pinpoint the presence of faulty LEDs.
11. **On LED:** Indicates the status of the inverter.
12. **Service Battery LED:** Indicates a battery fault, including low voltage or over current. It could also indicate that the battery was in the fast-charging state for over 12 hours.

Battery Chemistry Options

Valve-Regulated Lead-Acid (VRLA)

VRLA batteries, commonly known as sealed lead-acid batteries, use a lead-acid chemistry and are designed to be maintenance-free. They incorporate safety valves to regulate internal pressure, preventing the battery from spilling or leaking under normal operating conditions.

These batteries are generally maintenance-free due to their sealed design, but they are sensitive to overcharging and temperature fluctuations, which can lead to reduced lifespan and performance.

One of the main advantages of VRLA batteries is their lower initial cost. However, this can be offset by higher long-term costs due to their shorter lifespan and higher maintenance requirements. Frequent replacements and potential performance issues can add to the total cost of ownership over time.

Lithium Iron Phosphate ($LiFePO_4$)

$LiFePO_4$ batteries use a lithium iron phosphate chemistry, known for its stability and safety. The design of $LiFePO_4$ batteries allows them to be compact and lightweight, providing a significant advantage in applications where space and weight are critical factors.

The $LiFePO_4$ chemistry is very stable, with a significantly lower risk of thermal runaway compared to other lithium-ion chemistries. This makes $LiFePO_4$ batteries one of the safest chemistries available, particularly for applications where safety is a critical concern.

$LiFePO_4$ batteries are more environmentally friendly, containing fewer toxic materials than VRLA batteries. Although recycling processes for lithium batteries are still developing, $LiFePO_4$ batteries generally pose less of an environmental hazard.

	Chemistry	Energy Density	Cycle Life	Shelf-Life	Self-Discharge Rate	Efficiency	Energy Density	Total Cost of Ownership	Depth of Discharge (DoD)	Environmental Impact
LFP Battery	Lithium Iron Phosphate	High	High (2000-5000 cycles)	High	Low	High	High	Better	High (90%)	Environmentally friendly
VRLA Battery	Lead-Acid	Low	Low (300-700 cycles)	Low	High	Low	Low	Good	Low (~50-80%)	Contains lead, less green

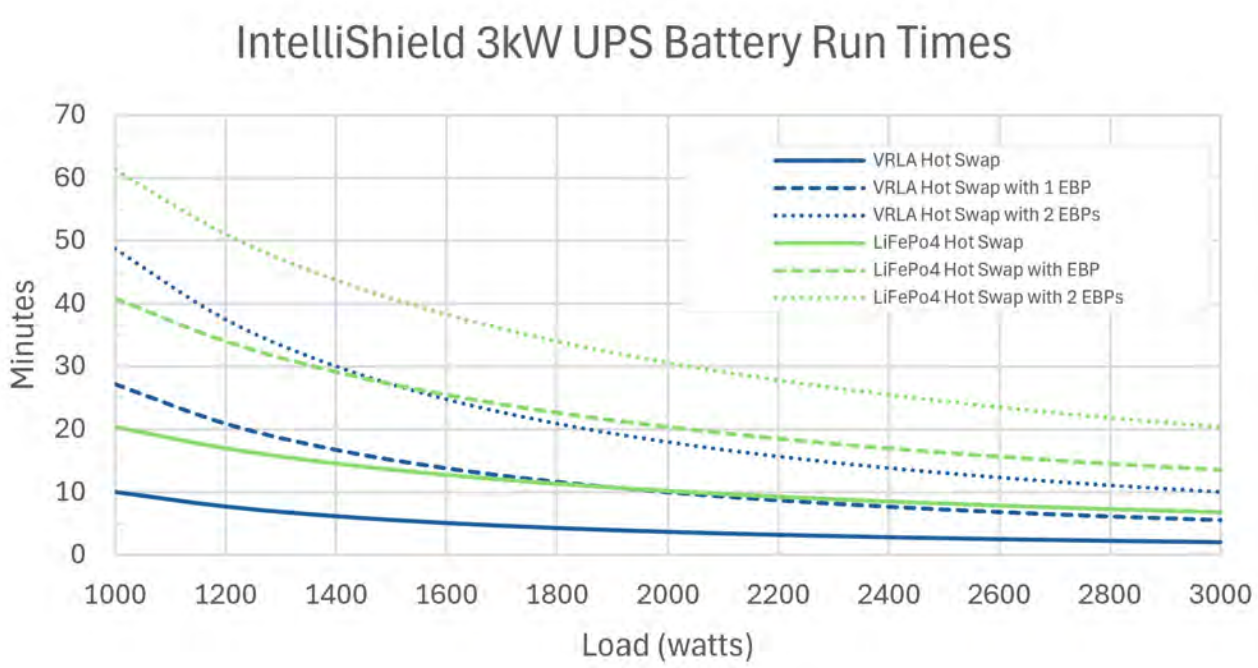

Note: *Battery runtimes are approximate and are variable with temperature, age, and configuration.*

Technical Specifications

Input

Parameter	Specification
Input AC Voltage	108 VAC to 264 VAC
Input Frequency	47 Hz - 440 Hz
Max Input current	34.5 Arms
Efficiency	85%
Power Factor	0.99 typical
AC Circuit Breaker	2 P, 40 A, Magnetic Hydraulic CB Power Toggle Switch, Front Panel

Output

Parameter	Specification
Power Rating	3 kVA, 3 kW
AC Voltage	120 VAC, 220 VAC, 230 VAC, or 240 VAC (+/-1%)
Load Power Factor	0.7 leading to 0.7 lagging without derating
Frequency	50 or 60 Hz, Synchronized with the input or frequency conversion
Frequency Regulation	+/-1%
Isolation	Galvanic isolation
Output Grounding	Neutral Bonded to Ground or Unbonded (selectable by switch)
Output Overload	Shutdown at 10% overload. Will continue to operate for up to 1 minute below 10% overload. Bypass mode can only be invoked when the output voltage and frequency are synchronized with the input.
Harmonic Distortion	< 5%

Battery

Parameter	Specification
Battery Type	Lead-Acid or Lithium Iron Phosphate ($LiFePO_4$)
Form Factor	Hot-swap drawer
Battery Maximum Run Time (at full load)	Lead-Acid: 2.1 Minutes, LiFePO4: 6.8 Minutes Adding (1) EBP: Lead-Acid: 5.6 Minutes, $LiFePO_4$: 13.6 Minutes Adding (2) EBPs: Lead Acid: 10 Minutes LiFePO_4: 20.4 Minutes
Built-In Charger	Up to 30 A max (based on the battery charging specifications)

Mechanical

Parameter	Specification
Dimensions	Rack mountable 2U, 3.45 x 19 x 27 inches (87.6 x 482.6 x 685.8 mm) w/ front panel 1 inch (25.4 mm) rack ears.
Nominal Weight +/- lbs	73.3 lbs. (33.2 kg)
Fans	EMI filter, Dust filter
Rack Slides	Selectable COTS light duty or Military Grade medium duty slides.
Noise	Less than 65 dB

Interface Communications

Parameter	Specification
Serial Data Stream	SNMP, RS232
Discrete (EPO, Alarms)	RS232 Port
Parallel Synchronization	Dsub Port

Connectors

Parameter	Specification
Connector(s) AC Input	Mil-Connector MS3452L20-19P (Pin A = High, Pin B = Neutral, Pin C = GND), Terminal Strip
Connector(s) AC Output	Mil-Connector MS3452L20-19S (Pin A = High, Pin B = Neutral, Pin C = GND), Terminal Strip

Controls and Indicators

Parameter	Specification
Bar Graph LED Indicators	Output Power Loading %; Battery Charge Level %
LED Status Indicators	Inverter Output On; Bypass On; UPS Fault; Service Battery
Front Panel Controls	AC Input On-Off Breaker, Cold Start Button; AC Output push-to-reset Breaker (optional) AC Output On (via F1 Button); Alarm Fault Silence (via F3 Button); LED Test (via F4 Button); Bypass (via F1 and F2 Buttons); UPS Shutdown (via F2 and F3 Buttons)
Audible Alarms	Input AC Interrupt; Inverter Failure; Overload; Low Battery
Auto Start	Auto Start: AC Output is Present when AC is Applied (Default Setting) Manual Start: Optional
Cold Start Switch	Cold Start (operate the UPS in battery mode)

Certified to Meet EMI and Environmental Standards

Parameter	Specification
Temperature, Operating	MIL-STD-810, -20 to 50 C
Temperature, Storage	MIL-STD-810, -40 to 70 C
Humidity	MIL-STD-810, 5% to 95% (non-condensing)
Shock	MIL-DTL-901
Vibration	MIL-STD-167-1
EMI and Power Quality MIL-STDs	MIL-STD-461 (CE101, CE102, RE101, RE102)
Compliance	IEC62040, RoHS3, - CE Certification

Designed to Meet

Parameter	Specification
Shock	MIL-STD-810
Vibration	MIL-STD-810
EMI and Power Quality MIL-STD's, (MIL-STD 461, MIL-STD-1399)	Other MIL-STD-461 CE, CS, RE, RS standards, MIL-STD-1399-300 Part B

Ordering Information

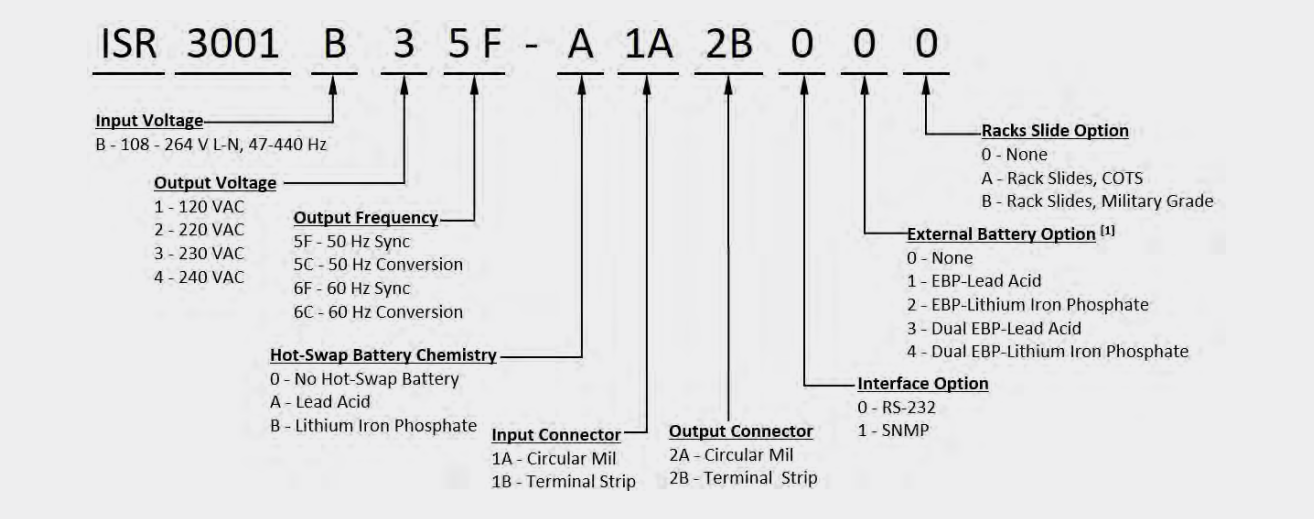

[1] *External and hot-swap battery chemistries must match*

Phone: +1 714-921-1580 • Fax: +1 714-921-4023 • sales.intellipower@ametek.com

Corporate Headquarters

1746 North Saint Thomas Circle, Orange, CA 92865 USA

www.IntelliPower.com

All products are designed, manufactured, and supported in the USA

ISO 9001:2015 Certified Facility | Military Standards

Via Acquanera, 29 22100 COMO
tel. 031.526.566 (r.a.) fax 031.507.984
info@calpower.it www.calpower.it