Asterion

5 Year Warranty

California Instruments Asterion AC Series

High Performance Programmable AC / DC Power Source

500 VA - 36000 VA
200 / 400 Vac
250 / 500 Vdc

Advanced Features

- High power density in 1U / 2U / 4U / 14U chassis up to 18kVA
- Intuitive touch panel control
- Innovative iX2™ current doubling technology
- Multi-language display for global operation
- Auto paralleling for higher power
- Single phase 1U models and 1 or 3 phase selectable 2U / 4U / 14U models
- Complete avionic test suites (optional)
- ATE version available in 1U, 2U and 4U models
- Standard LXI LAN, USB and RS232, optional GPIB
- Legacy CSW5550 Emulation on the AST6003A1 Model

Performance. Reliance. Brilliance.

Inspired by the enduring power of a brilliant star, the California Instruments Asterion line of AC power sources by AMETEK Programmable Power combines intelligence and flexibility to create an advanced platform of AC solutions. This easy-to-configure design features sophisticated technology for delivering high performance, programmable AC and DC power. Its sleek design packs maximum power density into a low-profile form factor with an intuitive touch screen interface placing that power at your fingertips. Centralized control and unparalleled modularity make Asterion the most adaptable platform on the market. Its groundbreaking capabilities set the standard for affordable, precision power sources.

Maximize rack space utilization with leading AC power density in 1U/2U/4U chassis. Employ full output power over widest voltage range with iX2™ technology. Quickly and expertly control the AC source with intuitive touchscreen.

Cal Power
Via Acquanera, 29 22100 COMO
tel. 031.526.566 (r.a.) fax 031.507.984
info@calpower.it www.calpower.it

Control via Front Panel Touchscreen & Encoder or available digital control interfaces.

The Asterion AC Series is Digital Signal Processor (DSP) controlled and can be operated from the intuitive, easy to use front panel touchscreen or the Ethernet LXI, USB and RS232 standard control interfaces, as well as through the optional GPIB control interface.

The touchscreen function group icons include a Dashboard, Output Programing Parameters, Measurements, Sequencing, Configuration, Control Interfaces, Applications, and System Settings. Function selection and parameter entry can be achieved either by direct selection from the touchscreen or by using the encoder selector button. The control resolution is adjusted by a dynamic rate change algorithm that combines the benefits of precise control over small parameter changes with quick sweeps through the entire range.

Product Controls and Interfaces

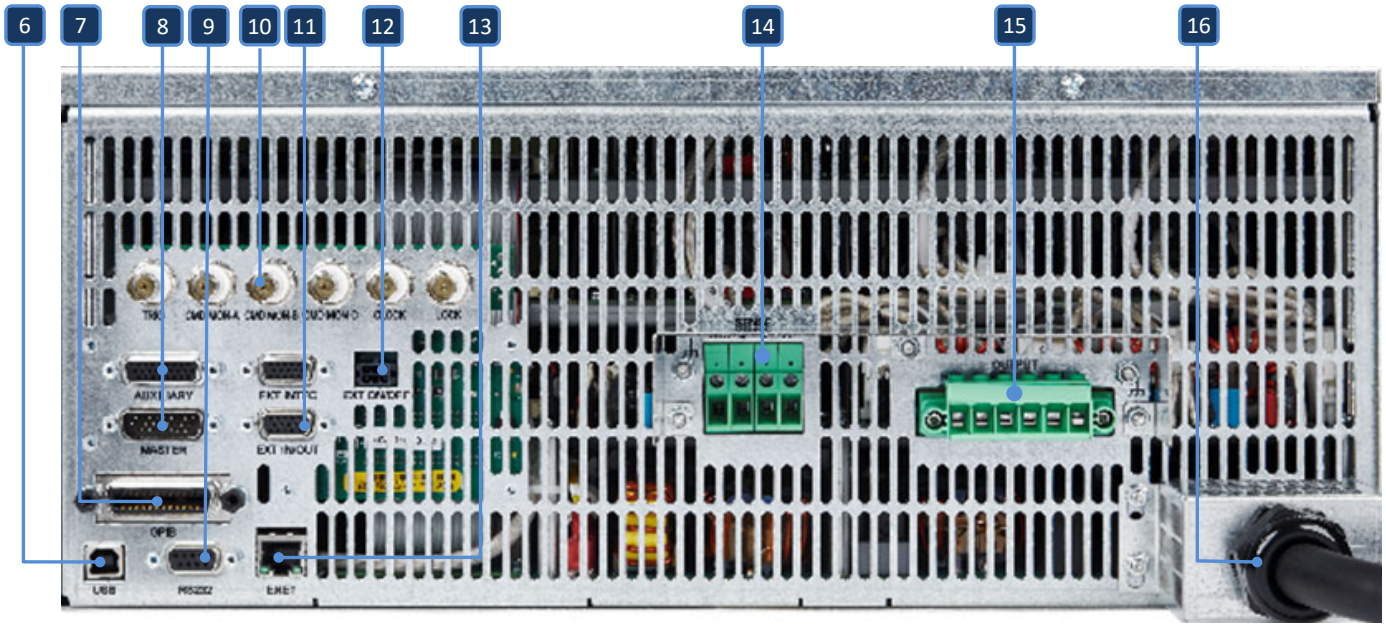

1. Power ON/OFF Switch
2. Status LEDs
   Indicates Range, OCP Mode, Remote state, and Fault status
3. Output Enable Button
   Press to enable the output. Blue LED glows to indicate the output is on.
4. Color Touch Display
   Front panel interface to control the AC source, including measurements, transient sequencing, and waveform generation.
5. Multi-function rotary/select switch
   Rotate to cycle through menus and set values. Press to select.
6. USB interface connector
7. GPIB interface connector (optional)
8. Master/Auxilliary system interface connector
   Plug n' play system expansion control signals
9. RS-232C interface connector
10. Command Monitor, Trigger Output, & Clock/Lock BNC connectors
    Isolated oscilloscope monitoring and trigger signals
11. External I/O connector (D-Sub 15)
    Analog control and monitoring signals
12. External Relay connector
    Isolated relay control interface for single phase mode of operation
13. Ethernet (LAN) interface connector
14. Remote Sense connector
15. Output connector
16. AC input

Applications

The Asterion AC Series is designed for testing today's complex electronics, including avionics, telecommunications and commercial electronics requiring low profile, light weight power sources with high power density. Other applications include:

- Testing for real world power conditions using different waveforms on all three phases (including DC)
- Load susceptibility testing with sequence or event programming and multiple voltage harmonics
- Power line disturbance testing
- Commercial and military avionics testing, including MIL-STD 704, RTCA/DO-160, B787, and ABD100
- Power supply testing for AC-DC, DC-DC converters and Uninterruptable Power Supplies
- IEC testing with source compliance to IEC 61000-4-7 and 4-15, and immunity testing per IEC 61000-4-11, 4-13, 4-14, 4-17, 4-28, and 4-29
- AC power simulation and manufacturing and process control
- Frequency & voltage conversion
- ATE applications

AC, DC, or AC+DC Output

A direct coupled, transformerless design allows AC and DC on separate phases or on the same phase. Hi DC content waveforms (up to 400V) can be created with no derating of output power, even with 100% reactive loads, eliminating the need for a separate DC supply. Waveform programming is easily accomplished using the Virtual Panels interface software. Waveforms can be uploaded and modified from a digital scope. The waveforms can then be downloaded into the Asterion AC sources and output to precisely simulate real world conditions.

Asterion Series Transient Generation

The Asterion Series controller has a powerful AC and DC transient generation system that allows complex sequences of voltage, frequency, and waveshapes to be generated. When combined with a multiphase arbitrary waveform capability, the AC and DC output possibilities are truly exceptional. Transient generation is controlled independently yet time synchronized during three phase operation. Accurate phase angle control and synchronized transient list execution provide unparalleled accuracy in positioning AC output events.

Transient programming is easily accomplished from the touch screen display, where intuitive menus guide the user through the transient definition process. These menus provide a convenient listing of the programmed transient sequence and allow for transient execution, Start, Stop, Abort, and Resume operations. User defined transient sequences can be saved to non-volatile memory for instant recall and execution later. The included Virtual Panels software interface program supports transient list generation and editing using a spreadsheet-like data entry grid. A library of frequently used transient programs can be stored to disk using this software suite.

Harmonic Analysis

The Asterion Series provides detailed amplitude and phase information on up to 50 harmonics of the fundamental voltage and current (up to 16kHz). Harmonic content can be displayed in both tabular and graphical formats on the color touch display for immediate feedback to the operator. Alternatively, the included Virtual Panels software can be used to display, print, and save harmonic measurement data. Total harmonic distortion of both voltage and current is calculated from the harmonic data.

High Crest Factor

With a crest factor of up to 7:1, the Asterion Series AC source can drive difficult nonlinear loads with ease. Since many modern products include switching power supplies, they tend to pull high repetitive peak currents. An AST4503A1D can deliver up to 52.5Apk (200V range) per phase.

iX2™ Constant-Power Mode Output Characteristic

The iX2™ Constant-Power mode has an output characteristic where full rated output power is available from 50% of full-scale output voltage to 100% of full-scale output voltage, as depicted in the graphs of Figure 1-1 and Figure 1-2. The output current versus output voltage follows a constant-power relation where the output current would be 200% of the full-scale value when the output voltage is 50% of full scale. The current ratings are also a function of output frequency, as shown in Figure 1-1 for the AST751, AST1501, AST2253, AST4503, AST6003, AST12K3, AST18K3 and AST3001 models above 500 Hz, and in Figure 1-2 for the AST501, AST1503, and AST3003 models above 1.2 kHz.

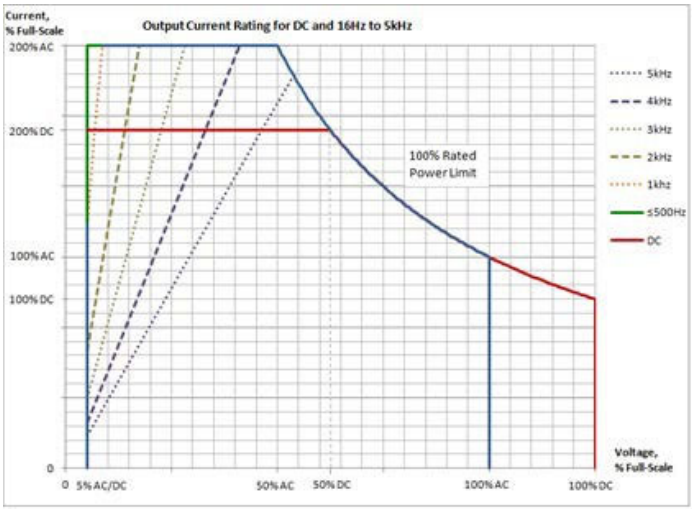

Figure 1-1. iX2™ Constant-Power: Output Current Versus Voltage, AST751, AST1501, AST2253, AST3001, AST4503, AST6003, AST12K3, AST18K3

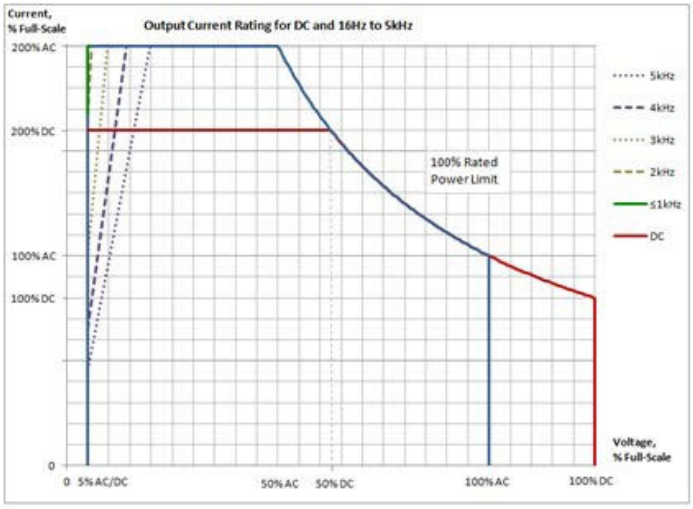

Figure 1-2. iX2™ Constant-Power: Output Current Versus Voltage, AST501, AST1503, AST3003, AST4503(3-ph)

Asterion AC Virtual Panels (Graphical User Interface)

Virtual Panels allow remote control of the Asterion AC power source as well as programming communication and monitoring for the Asterion ATE model without front panel display.

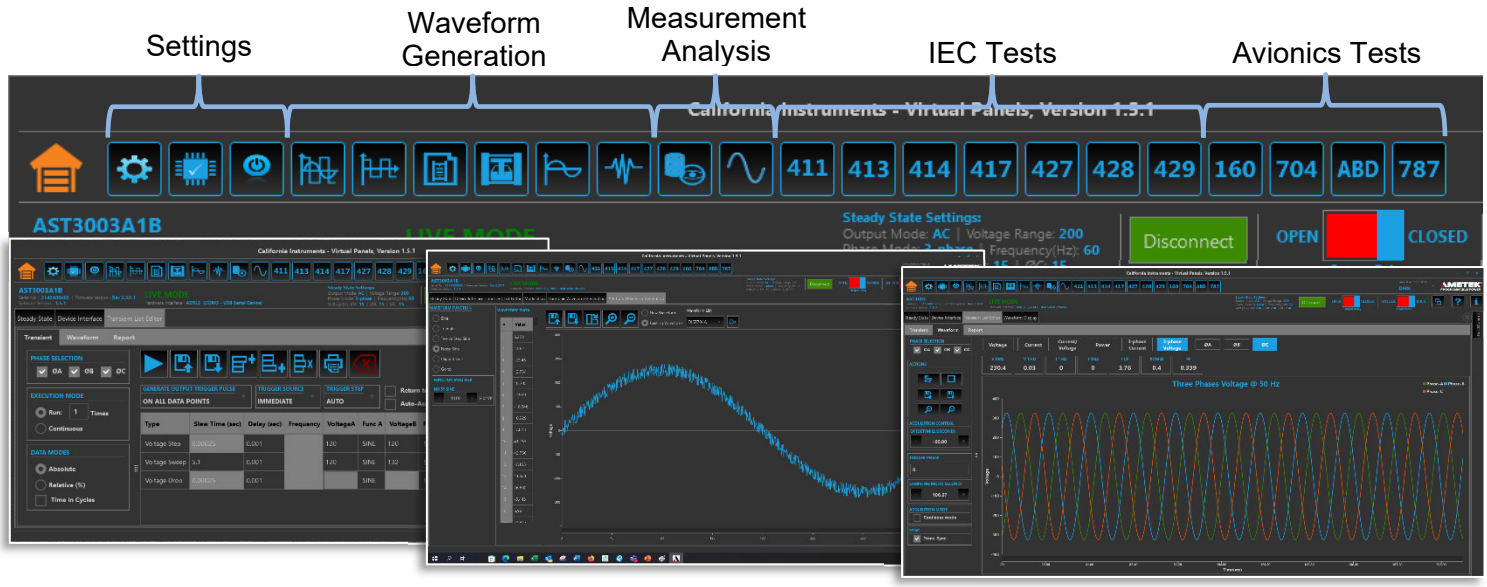

Models and Configurations

Model	Enclosure	Form	Rated Power	Arms (max) per Φ [2]	Adc (max) per Φ [2]
AST0501A1	1U	1-phase	500/500	5.0/2.5	4.0/2.0
AST0751A1	1U	1-phase	750/750	7.5/3.75	6.0/3.0
AST1501A1	1U	1-phase	1.5kVA/1.5kW [1]	15.0/7.5	12.0/6.0
AST1503A1	2U	1/3 phase	1.5kVA/1.5kW	5.0/2.5	4.0/2.0
AST2253A1	2U	1/3 phase	2.25kVA/2.25kW	7.5/3.75	6.0/3.0
AST3001A1	2U	1-phase	3kVA/3kW [1]	30.0/15.0	24.0/12.0
AST3003A1	2U	1/3 phase	3kVA/3kW [1]	10.0/5.0	8.0/4.0
AST4503A1	4U	1/3 phase	4.5kVA/4.5kW	15.0/7.5	12.0/6.0
AST6003A1	4U	1/3 phase	6kVA/6kW	20.0/10.0	16.0/8.0
AST12K3A1	14U	1/3 phase	12kVA/12kW	40.0/20.0	32.0/16.0
AST18K3A1	14U	1/3 phase	18kVA/18kW	60.0/30.0	48.0/24.0

[1] *Output power derates at with single phase input*
[2] *Refer to "iX2™ Constant-Power Mode Output Characteristic on page 4*

AC/DC Output Specifications

Parameter	Specification Detail
Voltage Range – AC	Low-Range: 0 to 200 Vrms L-N; High-Range: 0 to 400Vrms L-N
Voltage Range (DC)	Low-Range: 0 to 250 Vdc; High-Range: 0 to 500 Vdc
RMS Current	200% of the full-scale RMS current at ≤50% of full-scale voltage. Refer to Figure 1-1 and Figure 1-2 for graphs of current rating as a function of output frequency.
iX2™ Constant-Power Mode	Constant-Power output capability in each output voltage range with full rated output power from 50% of full-scale output voltage to 100% of full-scale; the output current increases to 200% of rated current at 50% full-scale output voltage from 100% rated current at 100% of full-scale voltage. Refer to Figure 1-1 and Figure 1-2 for graphs of current rating as a function of output frequency.
DC Offset Voltage, Typical	±20mVDC, ≥40Hz
Voltage Program Accuracy	±0.1% + 0.2% FS, DC, and AC 1kHz; >1kHz, add ±0.2% of full-scale/kHz; add ±0.1% of full scale for AC+DC mode. Valid from 5% to 100% FS, with sense leads connected.
Voltage Resolution	≤0.02V, AC, DC, and AC+DC mode
Voltage Stability (typ)	±0.1% FS over 8 hours; with constant line, load, and temperature; with sense leads connected
Voltage Distortion (max)	≤100 Hz: 0.25%; 100Hz to 500Hz: 0.5%; 500Hz to 1kHz: 1%; >1kHz:1% + 1%/kHz to 5 kHz; with resistive load
VoltageSlew Rate, Typical	≥10V/µs with full-scale programmed voltage step
Current Limit Program Accuracy	± (0.3% of actual + 0.5% of full-scale) for DC, and AC 16 Hz to 1.2 kHz; add ±0.1% of full-scale for AC+DC mode. Valid from 5% of full scale to 200% of full-scale. HF option: for High-Range, add 1.2% of maximum/kHz; for Low Range, add 0.1% of maximum/kHz; Valid from 20% of full-scale to 200% of full-scale.
Frequency	DC, 16 – 1.2kHz HF Option: DC, 16Hz to 5kHz LF Option: DC, 16-550Hz
Frequency Program Accuracy	±0.01 +frequency resolution/2
Frequency Program Resolution	≤81.91Hz: 0.01Hz 82-819.1Hz: 0.1Hz ≥820Hz: 1Hz
Line Regulation	±0.015% of full-scale voltage, for a ±10% input line change; DC, or 40 Hz to 5 kHz.
Load Regulation	±0.025% FS, for 100% load change; DC, or 40 Hz to 1 kHz, >1 kHz, add ±0.015% FS/kHz

Parameter	Specification Detail
Noise, (typ)	AC output: 450 mV(RMS), low-range; 750 mV(RMS), high-range; at ≥40 Hz; 20 kHz to 1 MHz; DC output: 400 mV(RMS), low-range; 700 mV(RMS), high-range; bandwidth, 20 Hz to 1 MHz.
Crest Factor	AST 751, AST 1501, AST 3001, AST 2253, AST 4503, AST 6003, AST12K3, AST18K3: 5:1 of full-scale current in each output range (ratio of peak output current to RMS full scale output current). AST 501, AST 1503, AST 3003: 7:1 of full-scale current in each output range (ratio of peak output current to RMS full scale output current).
Frequency Range	Standard models: DC, and 16 Hz to 1.2 kHz; LF option: DC, and 16 Hz to 550 Hz; HF option: DC, and 16 Hz to 5 kHz
Frequency Accuracy	±0.01% of actual + frequency resolution/2; FC option: ±0.3%.
Frequency Programming Resolution	≤81.91 Hz: 0.01 Hz; 82-819.1 Hz: 0.1 Hz; 820-5 kHz: 1Hz; with LKM/LKS option: 1 Hz, 16-5kHz.
Phase Programming Range	0.0 º to 360.0 º, relative to external synchronization signal; in multi-phase group, Auxiliary unit output voltage is relative to the Leader unit output voltage, with the Leader unit as reference 0°.
Phase Accuracy	±1º, 16 Hz to 100 Hz; ±2º >100 Hz to 1.2 kHz, plus ±1º/kHz above 1.2 kHz
Phase Programming Resolution	±0.4º

AC Input Specifications

Option	Phase	Voltage	Operating Range	Frequency	Form	Available on
B	1 or 3	120/240	90 – 132 VAC [1] 180 – 264 VAC	47-440 Hz	2 wire + GND (single phase installations) [1] 3 wire + GND (three phase installations)	1U and 2U
C	3	208	180 – 264 V L-L	47-440 Hz	3 wire + GND	4U and 14U
D	3	400	342 – 457 V L-L	47-63 Hz	4 wire + GND	4U and 14U
E	3	480	432 – 528 V L-L	47-63 Hz	3 wire + GND	4U and 14U

[1] Some models will derate output power with single phase input

Parameter	Specification Detail
Input Current	Model Dependent
Efficiency [1], typical	75%
Power Factor [1], typical	1U & 2U models: 1-phase: 0.98; 3-phase: 0.95, 4U & 14U models: 0.95
Hold-Up Time [1], typical	≥10 ms
Isolation Voltage	2200 VAC, input to output; 1350 VAC, input to chassis

[1] At full load and DC or 16 Hz to 1.2 kHz output frequency, nominal AC input

Standard Measurements

Parameter		Range (per phase)	Accuracy	Resolution
Voltage (AC, DC, AC+DC)		0-500 V	16-1.2 kHz: ±0.1% + 0.2% FS; >1.2kHz: add ±0.2% FS/kHz. For AC+DC mode, add ±0.1% FS. Valid from 5% to 100% FS with sense leads connected.	20 mV; 25 mV (DC)
RMS Current	AST 501, AST 751	± 0-7.5 Arms	16-1.2kHz: ±0.3% + 0.5% FS; add ±0.3% FS/kHz for AC 16 Hz to 1 kHz; >1 kHz; add ±0.1% FS for AC+DC mode. Valid from 5% to 100% FS	2 mA [1]
	AST 1501	± 0-15 Arms		
	AST 1503, AST 2253	± 0-7.5 Arms		
	AST 3003, AST 4503	± 0-15 Arms		
	AST 3001	± 0-30 Arms		
	AST 6003	± 0-22.5 Arms		
	AST 12K3	± 0-45 Arms		
	AST 18K3	±0-67.5 Arms		

Standard Measurements (continued)

Parameter		Range (per phase)	Accuracy	Resolution
Peak Current	AST 501, AST 751	± 0-37.5 Apk	±0.5% + 0.5% of FS [2]	5 mA [1]
	AST 1501	± 0-75 Apk		
	AST 1503, AST 2253	± 0-37.5 Apk		
	AST 3003, AST 4503	± 0-75 Apk		
	AST 3001	± 0-150 Apk		
	AST 6003	± 0-112.5 Apk		
	AST 12K3	± 0-225 Apk		
	AST 18K3	± 0-337.5 Apk		
Frequency		16 Hz to 5.0 kHz	±0.01% of actual + resolution/2	≤81.91 Hz: 0.01 Hz; 82.0-819.1 Hz: 0.1 Hz; ≥820: 1 Hz
Phase		0-360°	±1°, 16 Hz to 100 Hz; ±2°, >100 Hz to 1 kHz; ±5°, >1 kHz	0.1°, 16-100 Hz; 1°, >100 Hz
Real Power		Model dependent	16-1.2kHz: ±0.4% + 0.7% FS; >1 kHz, add ±0.4% of full-scale/kHz; add ±0.2% of full-scale for AC+DC mode.	1 W [1]
Apparent Power		Model dependent	16-1.2 kHz: ±0.4% + 0.7% FS; >1 kHz, add ±0.4% of full-scale/kHz; add ±0.2% of full-scale for AC+DC mode.	1 VA [1]
Power Factor		0-1	±2% of full-scale	0.01

[1] x3 for three phase models in the single phase mode

Harmonic Measurements

Parameter	Specification
Frequency, Fundamental	16-81.91 Hz, 82.0-819.1 Hz, 820-960 Hz
Fundamental Frequency Resolution	0.01 Hz: 16-81.91 Hz; 0.1 Hz: 82.0-819.1 Hz; 1 Hz: 820-960 Hz
Harmonic Frequency	32 Hz to 48 kHz; 2nd to 50th harmonic
Fundamental Voltage Accuracy	±(0.2% of actual + 0.3% of full-scale) for 16 Hz to 960 Hz.
Fundamental Voltage Resolution	20 mV
Harmonic Voltage Accuracy	±(0.2% of actual + 0.3% of full-scale + 0.3% of full-scale/kHz).
Harmonic Voltage Resolution	20 mV
Fundamental Current Accuracy	±(0.4% of actual + 0.4% of full-scale) for 16 Hz to 960 Hz.
Fundamental Current Resolution	2 mA; 1-phase mode in 3-phase models: 6 mA.
Harmonic Current Accuracy	±(0.4% of actual + 0.6% of full-scale + 0.4% of maximum/kHz).
Harmonic Current Resolution	2 mA; 1-phase mode in 3-phase models: 6 mA.

Protection

Parameter	Specification
Output Overvoltage Protection (OVP)	Programmable to 115% of full-scale output voltage; exceeding OVP threshold results in shutdown of output.
Output Current Limit Protection	User-selectable constant-current mode or current-limit mode, with programmable current setpoint; in Constant-Current mode, output current is regulated to setpoint; in Constant Voltage mode, exceeding current-limit setpoint results in shutdown of output; Current limit delay: programmable from 100 ms to 10s.
Output Short-Circuit Protection	Instantaneous and RMS current limit
AC Input Overcurrent Protection	Internal fuses in each phase for fault isolation; not user replaceable
AC Input Undervoltage Protection	Automatic shutdown for insufficient AC input voltage
AC Input Transient Protection	Protection to withstand EN61326-1, Class-A surge levels
Overtemperature Protection (OTP)	Internal temperature monitors cause shutdown of output if temperature thresholds are exceeded

Environmental Specifications

Parameter	Specification
Operating Temperature	0°C to 40°C (32° F to 104° F)
Storage Temperature	-40°C to 85°C (-40°F to 185° F)
Altitude	2000 m (6,562 ft)
Relative Humidity	5-95 %, non-condensing
Vibration	MIL-PRF-28800F, Class 3; 5-500 Hz per Paragraph 4.5.5.3.1.
Shock	MIL-PRF-28800F, Class 3; 30G half-sine with 11ms duration per Paragraph 4.5.5.4.1.
Transportation Integrity	ISTA Test Procedure 1A

Mechanical Specifications

Parameter	Specification
1U Dimensions	H, 1.75” (44.45 mm); W (front panel), 19.0” (482.6 mm); D, 23.0” (584.2 mm); H, 1.75” (44.45 mm); W (chassis), 16.9” (429 mm); D, 23.0” (584 mm).
2U Dimensions	H, 3.47” (88.1 mm); W (front panel), 18.9” (480 mm); D, 23.0” (584 mm); H, 3.47” (88.1 mm); W (chassis), 16.9” (429.3 mm); D, 23.0” (584 mm).
4U Dimensions	H, 6.97” (177.04 mm); W (front panel), 18.9” (480 mm); D, 23.0” (584 mm); H, 6.97” (177.04 mm); W (chassis), 16.9” (429 mm); D, 23.0” (584 mm).
14U Dimensions	H, 24.5” (622 mm); W (front panel), 19.5” (495.3 mm); D, 29.6” (752 mm)
14U Dimension (with castor wheels)	H: 28.5” (724 mm); W (front panel): 19.5” (495.3 mm); D: 29.6” (752 mm)
1U Unit Weight	AST 501/751: 19 lbs / 8.6 kg; AST 1501: 22 lbs / 10 kg.
2U Unit Weight	AST 1503/2253: 39 lbs / 17.7 kg; AST 3003: 48 lbs / 21.8 kg.
4U Unit Weight	AST 6003, 104 lbs / 47.2 kg; AST 4503, 87 lbs / 39.5 kg;
14U Unit weight	AST 12K3, 270 lb / 123 kg; AST 18K3, 400 lb / 182 kg;
1U Shipping Weight	AST 501/751: 29 lbs / 13.2 kg; AST 1501: 32 lbs / 14.6 kg.
2U Shipping Weight	AST 1503, 43 lbs / 19.5 kg; AST 2253: 45 lbs / 20.5 kg; AST 3001: 48 lb / 21.8 kg; AST 3003: 54 lbs / 24.5 kg.
4U Shipping Weight	AST 6003, 104 lbs/ 47.2 kg; AST 4503, 93 lbs / 42.2 kg;

Regulatory Compliance

Parameter	Specification
EMC	CE marked for EMC Directive 89/336/EEC per EN61326-1:2013, Class-A for emissions and immunity as required for the EU CE Mark.
Safety	CE Marked for LVD compliance 2014/35/EU to EN 61010-1, Edition 3.1
CE Mark LVD Categories	Installation Overvoltage Category: II; Pollution Degree: 2; Class II equipment; indoor use only.
RoHS	CE marked for compliance with EU Directive 2011/65/EU for Restriction of Hazardous Substances in Electrical and Electronic Equipment.

Interface Options

Option	Description
GPIB	Adds IEEE-488.2 GPIB communication interface
CSW	Adds CSW Series SCPI code emulation
GPIB & CSW	Bundled IEEE-488.2 and CSW emulation options

Firmware/Software Options

Firmware / Software Options	
Option [1]	**Description**
B787	Avionics Electrical Power Quality Test Software; Boeing 787B3-0147 A/B/C (B787).
AMD	Avionics Electrical Power Quality Test Software; Airbus AMD24 C (A400M).
B787 & AMD	Includes both B787 and AMD options.
AVSTD	Avionics Electrical Power Quality Test Software Package; includes 160 (RTCA/DO160 E/F/G), 704 (MIL-STD 704 A/B/C/D/E/F), ABD (Airbus ADB100.1.8 D/E), A350 (Airbus ADB100.1.8.1 B/C).
AVALL	Avionics Electrical Power Quality Test Software Package; includes AVSTD, B787, AMD.
1399	MIL-STD-1399-300B shipboard power test software.
411	IEC 61000-4-11 voltage dips and interruptions EMC test software (pre-compliance).
413	IEC 61000-4-13 harmonics and Inter-harmonics EMC test hardware and software.
411 & 413	Includes both 411 and 413 options.
MC	Options are installed in all chassis of a multi-chassis (MC) configuration.

[1] For Avionics options, reference the Avionics Software Manual (P/N 4994-972) for test details. All options require the use of the Asterion Virtual Panels, graphical user interface Windows application software downloadable at www.programmablepower.com.

Warranty Statement:

AMETEK Programmable Power Inc. warrants its products to be free from defects in material and workmanship. The warranty period is from the date of original shipment of the product to the original purchaser (see website for warranty periods by product). As of 10/1/19, all Asterion AC units come with an industry-leading five (5) year warranty. Extended warranties are available and an enhanced Warranty+ option on new purchases is also available. Consult with your local sales representative to learn more.
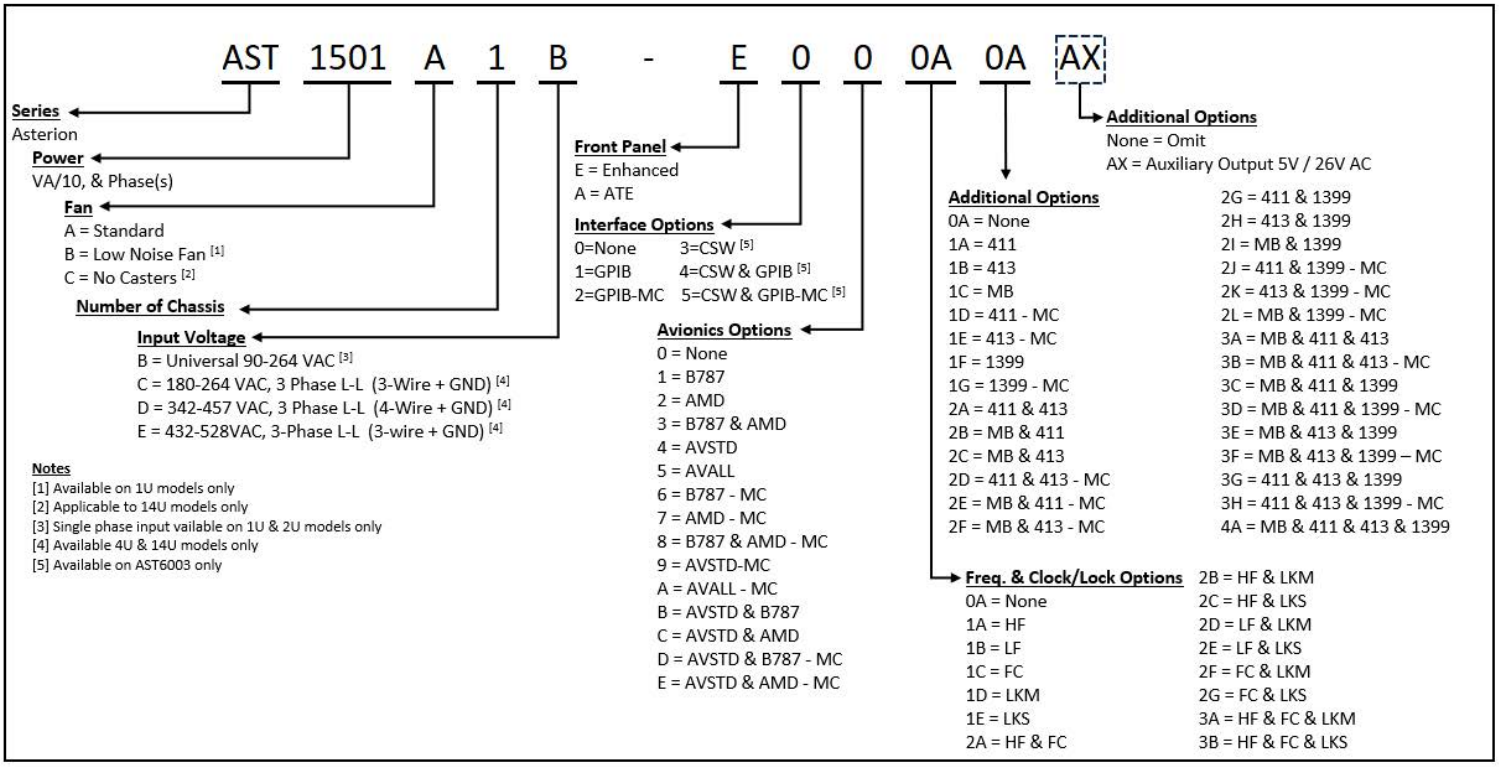
Options & Order Information