Via Acquanera, 29 22100 COMO
tel. 031.526.566 (r.a.) fax 031.507.984
info@calpower.it www.calpower.it

FLUKE Calibration

8588A/8558A

Reference Multimeter and 8 1/2 Digit Multimeter

Operators Manual

February 2019

© 2019 Fluke Corporation. All rights reserved. Specifications are subject to change without notice.
All product names are trademarks of their respective companies.

LIMITED WARRANTY AND LIMITATION OF LIABILITY

Each Fluke product is warranted to be free from defects in material and workmanship under normal use and service. The warranty period is one year and begins on the date of shipment. Parts, product repairs, and services are warranted for 90 days. This warranty extends only to the original buyer or end-user customer of a Fluke authorized reseller, and does not apply to fuses, disposable batteries, or to any product which, in Fluke's opinion, has been misused, altered, neglected, contaminated, or damaged by accident or abnormal conditions of operation or handling. Fluke warrants that software will operate substantially in accordance with its functional specifications for 90 days and that it has been properly recorded on non-defective media. Fluke does not warrant that software will be error free or operate without interruption.

Fluke authorized resellers shall extend this warranty on new and unused products to end-user customers only but have no authority to extend a greater or different warranty on behalf of Fluke. Warranty support is available only if product is purchased through a Fluke authorized sales outlet or Buyer has paid the applicable international price. Fluke reserves the right to invoice Buyer for importation costs of repair/replacement parts when product purchased in one country is submitted for repair in another country.

Fluke's warranty obligation is limited, at Fluke's option, to refund of the purchase price, free of charge repair, or replacement of a defective product which is returned to a Fluke authorized service center within the warranty period.

To obtain warranty service, contact your nearest Fluke authorized service center to obtain return authorization information, then send the product to that service center, with a description of the difficulty, postage and insurance prepaid (FOB Destination). Fluke assumes no risk for damage in transit. Following warranty repair, the product will be returned to Buyer, transportation prepaid (FOB Destination). If Fluke determines that failure was caused by neglect, misuse, contamination, alteration, accident, or abnormal condition of operation or handling, including overvoltage failures caused by use outside the product’s specified rating, or normal wear and tear of mechanical components, Fluke will provide an estimate of repair costs and obtain authorization before commencing the work. Following repair, the product will be returned to the Buyer transportation prepaid and the Buyer will be billed for the repair and return transportation charges (FOB Shipping Point).

THIS WARRANTY IS BUYER'S SOLE AND EXCLUSIVE REMEDY AND IS IN LIEU OF ALL OTHER WARRANTIES, EXPRESS OR IMPLIED, INCLUDING BUT NOT LIMITED TO ANY IMPLIED WARRANTY OF MERCHANTABILITY OR FITNESS FOR A PARTICULAR PURPOSE. FLUKE SHALL NOT BE LIABLE FOR ANY SPECIAL, INDIRECT, INCIDENTAL, OR CONSEQUENTIAL DAMAGES OR LOSSES, INCLUDING LOSS OF DATA, ARISING FROM ANY CAUSE OR THEORY.

Since some countries or states do not allow limitation of the term of an implied warranty, or exclusion or limitation of incidental or consequential damages, the limitations and exclusions of this warranty may not apply to every buyer. If any provision of this Warranty is held invalid or unenforceable by a court or other decision-maker of competent jurisdiction, such holding will not affect the validity or enforceability of any other provision.

Fluke Corporation
P.O. Box 9090
Everett, WA 98206-9090
U.S.A.

Fluke Europe B.V.
P.O. Box 1186
5602 BD Eindhoven
The Netherlands

11/99

Table of Contents

Title	Page
Introduction	1
Safety Information	1
Specifications	1
Instruction Manuals	2
Contact Fluke Calibration	2
Service Information	2
Product Features	3
Common Features	3
8588A Reference Multimeter	4
8558A 8 1/2 Digit Multimeter	4
Installation	4
Unpack and Inspect the Product	4
Standard Equipment	5
Placement and Rack Mounting	5
Cooling Considerations	6
Environmental and Input Requirements	6
Mains Voltage	7
Grounding the Product	8
Line Power and Fuse	9
Front and Rear Panel	9
Front-Panel Features	10
Rear-Panel Features	14
Operation	16
Turn on the Product	16
Power-Up State	16
Warmup Requirements	17
Functions	18
DC Voltage	18
Measure DC Voltage	19
Simple Lead Connections	19
Common Mode Rejection - Use of External Guard Connection	20
AC Voltage	20
Measure AC Voltage	24
Induced Interference	24
Common Mode Rejection	24
Lead Considerations	24

DC Current 25
AC Current 27
ACI Measure Setup 28
Measure AC Current 30
Resistance 31
Measure Resistance 36
2-Wire Measurements 36
4-Wire Measurements 36
4-Wire High-Resistance Measurements 37
4-Wire Resistance Zero 37
Ω Guard 38
Digitize 39
More 48
Capacitance (8588A only) 48
RF Power (8588A only) 50
RF Power Softkeys 52
Connect a Power Sensor to the Product 53
Connect a Power Sensor to a Unit Under Test 54
Set the Measurement Frequency 54
Frequency Counter 55
Measure Frequency 58
DCI Ext Shunt (8588A Only) 59
ACI Ext Shunt (8588A Only) 62
Measure AC Current with ACI Ext Shunt 68
PRT 69
Measure PRTs 69
Thermocouple 71
Measure Thermocouples 71
Features 74
Input Terminal Selection 74
Use the Scan Operations 75
Scan Sequences 76
4W Tru Ohm Scan Mode (Tru Ohms Ratio) 76
External Guard 78
Output Signal 79
TRIG OUT 80
Zero 83
Math 85
Analyze 88
Memory Setup 95
Instrument Setup 97
Display Settings Submenu 98
Instrument Settings 99
Remote Settings 100
Calibration Adjust 101
Diagnostics 103
Triggering Measurements 104
Details of the Triggering Subsystem 105
Trigger Indicator 115
Examples of Using the Trigger Subsystem 116
Special Event Qualifiers 123
Guidelines to Avoid Measurement Errors 125
Maintenance 127
Fuse Replacement 127
Clean the Exterior 128
Accessories 129

Introduction

The Fluke Calibration 8558A 8 1/2 Digit Multimeter and 8588A Reference Multimeter (the Product or Multimeter unless otherwise specified) are for demanding and precise measurement applications. The Product functions in both stand-alone and systems applications. 8 1/2 digit resolution provides high performance and makes the Product well suited for application use in standards labs, calibration labs, engineering labs, and systems use. The 8588A includes more features and higher performance for the most demanding metrology applications. The Products are accurate, stable, fast, and easy to use.

Safety Information

General Safety Information is located in the printed *Safety Information* document that shipped with the Product. It can also be found online at www.Flukecal.com. More specific safety information is listed where applicable.

A **Warning** identifies conditions and procedures that are dangerous to the user. A **Caution** identifies conditions and procedures that can cause damage to the Product or the equipment under test.

Specifications

Safety specifications are located in the printed *Safety Information.* Full specifications are located online at www.flukecal.com in the *8558A/8588A Specifications.*

Instruction Manuals

The Product user documentation is:

- *8588A/8558A Safety Information* (printed, localized in 9 languages)
- *8588A/8558A* Operators Manual (provided online or a printed copy is available for purchase through the Fluke Calibration Service Department, localized in 9 languages)
- *8588A/8558A Service Manual* (provided online)
- *8588A/8558A Remote Programmer's Manual* (provided online or a printed copy is available for purchase through the Fluke Calibration Service Department)

To order, see the Fluke Calibration Catalog or contact a Fluke Calibration sales representative. See *Contact Fluke Calibration*.

This manual provides complete information to install and operate the Product from the front panel.

Contact Fluke Calibration

To contact Fluke Calibration, call one of the following telephone numbers:

- Technical Support USA: 1-877-355-3225
- Calibration/Repair USA: 1-877-355-3225
- Canada: 1-800-36-FLUKE (1-800-363-5853)
- Europe: +31-40-2675-200
- Japan: +81-3-6714-3114
- Singapore: +65-6799-5566
- China: +86-400-810-3435
- Brazil: +55-11-3759-7600
- Anywhere in the world: +1-425-446-6110

To see product information and download the latest manual supplements, visit Fluke Calibration's website at www.flukecal.com.

To register your product, visit http://flukecal.com/register-product.

Service Information

Contact an authorized Fluke Calibration Service Center if the Product needs calibration or repair during the warranty period. See *Contact Fluke Calibration*. Please have Product information such as the purchase date and serial number ready when scheduling a repair.

To reship the Product, use the original shipping container. If the original carton is not available, then order a new container from Fluke Calibration. See *Contact Fluke Calibration.*

Product Features

Common Features

The Products share a common chassis and display/hardware platform. They are differentiated by additional precision components and firmware.

The Product shares these capabilities:

- Inherent accuracy and stability without the need for periodic internal automatic adjustments like the ACAL function
- Color display with user interface (UI) in English, Chinese, French, German, Japanese, Korean, Russian and Spanish
- Visual Connection Management active terminal illumination
- Versatile resolution and reading rate settings:
    - 8 1/2 to 4 1/2 digit resolution
    - aperture time settings from 0 ns to 10 seconds (200 ns min resolution)
    - 100 k readings/sec at 4 1/2 digits (18-bit) resolution in remote operation
- Digitizing function for specific digitizing applications with timestamps and date provided by an internal real-time clock
- Up to 5 Mega Samples/second sampling at 18 bits with up to 20 MHz bandwidth
- Programmable front/rear inputs, automatic ratio ohms, voltage, and more using the front/rear inputs.
- Math, with null, normalize, scale, and average
- Analyze, with graphing, trending and statistics
- Frequency measurements to 100 MHz
- Capacitance measurements to calibrate multi-product calibrators
- RF power meter readout for R&S NRP series power sensors
- GPIB SCPI, Ethernet, and USB remote interfaces
    - Standard IEEE-488 (GPIB) interface, complying with ANSI/IEEE Standards 488.1-1987 and 488.2-1987
    - Universal Serial Bus (USB) 2.0 high-speed interface device port for remote control with USB TMC
    - Integrated 10/100/1000BASE-T Ethernet port for network connection remote control
- PRT and thermocouple readouts
- Front and rear USB memory ports for data transfer

- Extensive Trigger modes
- Software emulation of the Fluke 8508A and HP/Agilent/Keysight 3458A remote interfaces
- Digital rms ac technology
- Extensive internal software-controlled self-testing and diagnostics of analog and digital functions.
- Analog Zero to remove residual offsets, for example, from thermal EMFs.

8588A Reference Multimeter

The 8588A has specifications suited for the most demanding calibration and metrology applications.

8558A 8 1/2 Digit Multimeter

The 8558A specifications are relaxed from those of the 8588A but its specifications are comparable to other 8 1/2 digit multimeters.

Installation

⚠⚠Warning

To prevent possible electrical shock, fire, or personal injury, do not apply more than the rated voltage, between the terminals or between each terminal and earth ground.

This section provides instructions to install the Product and connect it to line power. Because this section explains fusing and operating environment requirements, read this section before you operate the Product.

The Product should only be used to measure sources up to 1000 V dc or rms ac that are protected from short circuit with current limiting to 200 mA or less. Instructions to connect cables to other instruments and to a Device Under Test (DUT) during operation are described in the *Functions* section.

Unpack and Inspect the Product

The Product ships in a container that prevents shipping damage. Inspect the Product carefully for damage, and immediately report any damage to the shipper Instructions for inspection and claims are included in the shipping container.

Unpack the Product and check for all the standard equipment listed in *Standard Equipment* and check the shipping order for additional items ordered. Report any shortage to the place of purchase or to the nearest Fluke Calibration Service Center. See *Contact Fluke Calibration* if necessary. If performance tests are required for your acceptance procedures, see the Product Service Manual for instructions.

Standard Equipment

Check that all items listed in Table 1 are included:

Table 1. Standard Equipment

Item	Fluke Calibration Part Number
8588A Reference Multimeter	4983182
8558A 8 ½ Digit Multimeter	4983194
Mains Power Cord	See *Mains Voltage*
8558A/8588A Safety Information (printed)	4769456
8588A-LEAD KIT-OSP General Purpose Probe Kit & Pouch	4951331
Calibration Certificate	-

Placement and Rack Mounting

Put the Product on top of a workbench or mount the Product in a standard 48-cm (19-inch) wide, 61-cm (24-inch) deep equipment rack. For bench-top use, the Product has non-slipping, non-marring feet.

To mount the Product in an equipment rack, order the accessory Y8588 or Y8588S for the sliding option.

⚠⚠Warning

To prevent possible electrical shock, fire, or personal injury, do not restrict access to the Product mains power cord. The mains power cord is the mains disconnecting device. If access to the power cord is inhibited by rack mounting, a properly rated accessible mains disconnecting switch must be provided within reach as part of the installation.

Cooling Considerations

⚠ Caution

Damage caused by overheating can occur if the area around the air intake or exhaust exit is restricted, the intake air is too warm, or the air filter becomes clogged.

An important feature of the Product is its internal cooling system. Baffles direct cool air from the fans throughout the chassis to dissipate heat during operation. Maintain the coolest possible internal temperature to ensure the accuracy and dependability of all internal parts of the Product.

The area around the air filter (power-switch side of the chassis) must be at least 7.5 cm (3 in) from nearby walls or rack enclosures. The exhaust perforations on the rear of the Product must be clear of obstructions for 7.5 cm (3 in). Obstructed airflow degrades Product performance.

To lengthen the life of the Product and ensure its performance:

- Keep the air filter at least 7.5 cm (3 in) from nearby walls or rack enclosures. See *Rear-Panel Features*.
- Make sure that the exhaust perforations on the rear of the Product are unobstructed.
- Do not direct exhaust from another instrument into the air inlet of the Product. Air entering the Product must be room temperature.
- Vacuum the air inlet and outlet areas every 30 days or more frequently if the Product is operated in a dusty environment.

Environmental and Input Requirements

For full accuracy, the Product must be used in an ambient temperature within ±5 °C of the temperature of the last calibration.

To operate the Product outside the specified temperature range, see the temperature coefficients specifications. See *Specifications*.

⚠⚠ Warning

To prevent possible electrical shock, fire, or personal injury, limit voltage sources connected to the Product to ≤1050 V dc or rms ac, and ≤200 mA. Do not connect voltages that have high-energy transients.

Mains Voltage

⚠⚠ Warning

To prevent possible electrical shock, fire, or personal injury:

- **Do not put the Product where access to the mains power cord is blocked.**
- **Use only the mains power cord and connector approved for the voltage and plug configuration in your country and rated for the Product.**
- **Make sure the ground conductor in the mains power cord is connected to a protective earth ground. Disruption of the protective earth could put voltage on the chassis that could cause death.**
- **Replace the mains power cord if the insulation is damaged or if the insulation shows signs of wear.**
- **The Product enclosure must be grounded through the grounding conductor of the power cord, or through the rear panel ground binding post.**

The Product comes with the appropriate line power plug for the country of purchase. If a different type is necessary, see Table 2. They list and show the mains line power plug types available from Fluke Calibration.

The Product automatically detects the main line voltage when powered up and configures itself to work at that voltage level. Nominal mains voltages ranging from 100 V rms to 120 V rms and from 220 V rms to 240 V rms (each ±10 %) are acceptable, with frequencies from 47 Hz to 63 Hz.

Table 2. Available Mains Power Cord Types

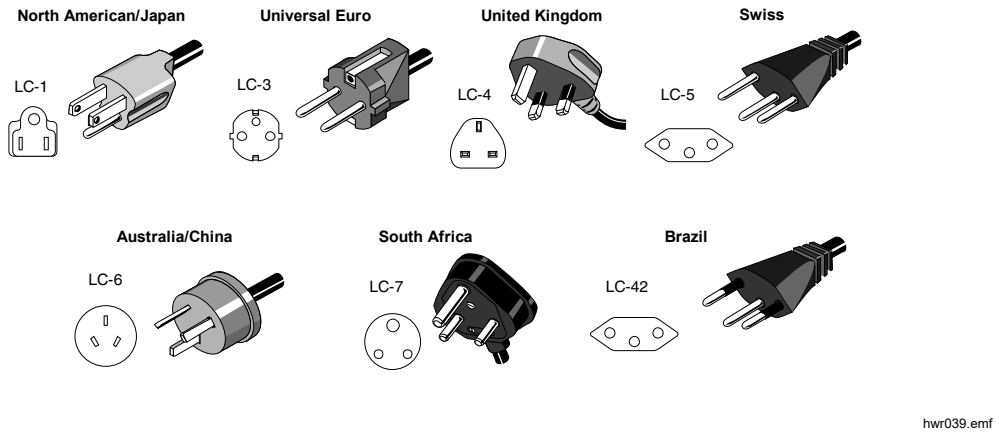

Type	Fluke Calibration Option Number
North America	284174
Universal Euro	769422
United Kingdom	769455
Switzerland	769448
Australia	658641
South Africa	722771
Brazil	3841347

Grounding the Product

The Product enclosure must be grounded through the grounding conductor of the power cord, or through the rear-panel ground binding post.

Line Power and Fuse

The line power receptacle and the fuse are located on the rear of the Product. See Figure 1. Use only the fuse recommended by Fluke Calibration.

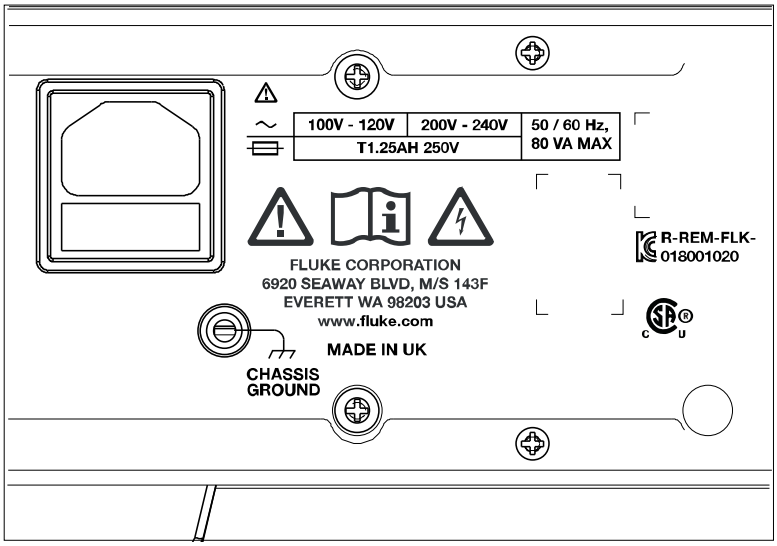

iei003.emf

Figure 1. Line Power and Mains Fuse Location

Front and Rear Panel

This section provides descriptions of each panel feature. Read this information before Product use. Front-panel operation instructions for the Product are in *Front-Panel Operation*. Remote operations instructions are in *Remote Programmer's Manual.*

Features that are unique to either the 8588A or 8558A are noted as such.

Front-Panel Features

Front-panel features (all controls, display, indicators, and terminals) are shown and described in Table 3.

Table 3. Front-Panel Features

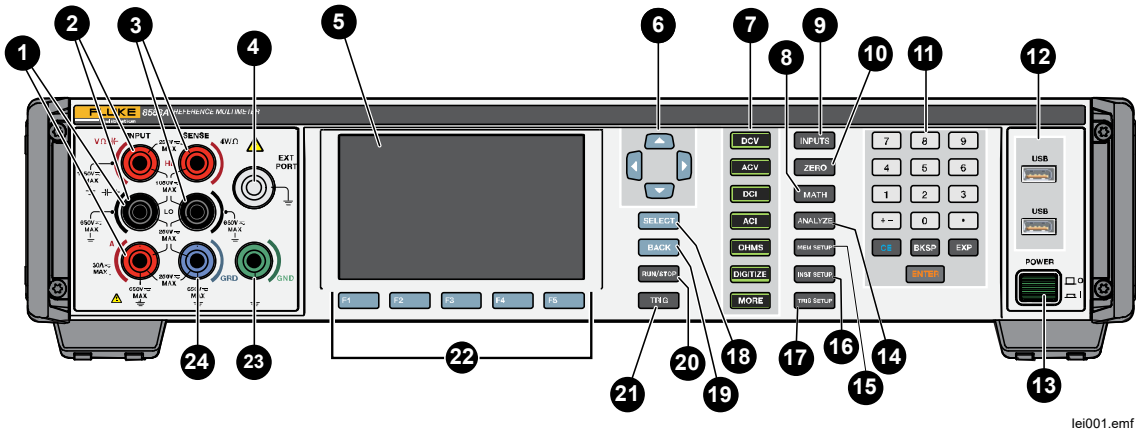

Number	Name	Function
1	**INPUT** Terminals **A**, **HI**, and **LO**	A pair of five-way binding posts for current measurements. Signals up to 30 A rms can be applied to these terminals on the 8588A and up to 2 A on the 8558A.These terminals illuminate to show connections.
2	**INPUT** Terminals **VΩ**, **HI**, and **LO**	A pair of five-way binding posts for voltage, ohms, capacitance, 2-wire PRT, and thermocouple measurements. On the 8588A, these binding posts also connect to the output of external current shunts. Frequency can be measured via these terminals. Signals up to 1050 V rms can be applied to these terminals. These terminals illuminate to show connections.
3	**SENSE** Terminals **V**, **HI**, and **LO**	A pair of five-way binding posts for 4-wire resistance measurements. They are the sense terminals in 4-W Ω and 3- and 4-wire PRT. These terminals illuminate to show connections.
4	**EXT PORT**	A connector to use the Rodhe & Schwarz (R&S) NRP RF power sensors. Note this terminal illuminates to show connections.
5	Color Display	Color display shows the output and active conditions and messages. The display provides controls not available with the keys alone by use of softkeys F1 to F5. The localized Product interface is made up of multiple menus, described throughout the manual. The display outputs in numerical or graphing format.
6	(Navigation Keys)	Four-way navigation keys used to move from various menu choices on the display when available. The active menu choice is highlighted.

Table 3. Front-Panel Features (cont.)

Number	Name	Function
7	Function Keys:	These keys select one of the major functions for the Product. Push any one of the function keys to take you immediately out of any other display screen and into the top level of that function.
	DCV	Access the DCV (DC Voltage) function. See *DC Voltage*.
	ACV	Access the ACV (AC Voltage) function. See *AC Voltage.*
	DCI	Access the DCI (DC Current) function. See *DC Current.*
	ACI	Access the ACI (AC Current) function. See *AC Current.*
	OHMS	Access the Ohms function. See *Resistance*.
	DIGITIZE	Access the Digitize function. See *Digitize*.
	MORE	When pushed, makes other functions visible that can be selected in the Product: Capacitance (8588A only), RF Power (8588A only), Frequency Counter, DCI Ext Shunt (8588A only), ACI Ext Shunt (8588A only), PRT readout, and Thermocouple readout. This key is used in conjunction with F5 (**More**) and cycles through the available functions. When one of the functions is selected under More, MORE illuminates. See *More*.
8	MATH	Provides mathematical operations on measurements, for example, averaging, multiplication by M, subtraction of C, and division by Z. The Math annunciator on the display indicates that a Mathematical operation is active. The **Last Reading** softkey (F4) is useful to quickly set C, Z, or m. See *Math*.
9	INPUTS	When selected, allows configuration of the front and rear terminals, including front/rear ratio measurement, and shows their status. Provides control of the External GUARD terminal and the rear TRIG OUT BNC connector. Shows the softkeys that configure the front and rear terminals, External Guard, and rear TRIG OUT BNC connector. F1 (**Terminals**) gives selections for **Front**, **Rear**, and shows three scan modes with different mathematical combinations of the front and rear readings, and also an **Isolated** configuration. F2 (**Front Delay**) sets the delay before the front terminals are activated. F3 (**Rear Delay**) selects the delay before the rear terminals are activated. F4 (**External Guard**) activates the GUARD terminal (On or OFF). and F5 (**Output Signal**) is used to set the behavior of the rear TRIG OUT BNC connector. See *Input Terminal Selection* and *TRIG OUT*.

Table 3. Front-Panel Features (cont.)

Number	Name	Function
10	ZERO	Starts a process that corrects for analog offset errors in an entire function, or for a specific range. See *Zero*.
11	Numeric keypad	Numbered keys to enter various Product parameters and other data such as the time and date. EXP allows you to enter an exponent. BKSP clears the last entry and CE clears the entire entry. Use ENTER to confirm all numerical entries.
12	USB Type A Connectors	These two USB ports function identically, allowing transfer of the Product's readings to a USB memory stick. Each port is capable of providing 5 V at 0.5 A maximum, and supports an external keyboard (but not a mouse). The Product does not uniquely identify the USB ports. When you copy data, insert only one USB memory device.
13	Mains Power Switch	In the 0 position, this switch isolates all mains power internally. Push to the 1 position to turn on the Product.
14	ANALYZE	The Analyze function provides different tools to analyze measurements: Statistics, Trend, Histogram, and Limits. See *Analyze.*
15	MEM SETUP	Push to change where readings are stored, change the result format, and transfer readings between memory locations. See *Memory Setup.*
16	INST SETUP	Access the Instrument Setup menu. See *Instrument Setup*.
17	TRIG SETUP	Access the menus to set the various triggering modes. See *Triggering Measurements.*
18	SELECT	Select the highlighted menu choice in conjunction with the navigation keys. A right pointing triangle ▶ on the screen indicates additional choices are available.
19	BACK	Moves the menu to the previous selection.
20	RUN/STOP	When the Trigger subsystem is continuously triggering (free run), push RUN/STOP once to put the Product into the non-continuous (idle) trigger state. Readings are not updated until a trigger event, for example, when you push TRIG . Pushing RUN/STOP again puts the Product back into the continuous trigger (free-run) state. See *Triggering Measurements*.

Table 3. Front-Panel Features (cont.)

Number	Name	Function
21	TRIG	Triggers a measurement when the Product is in the non-continuous trigger (idle) state. The idle state occurs when the Run/Stop key is pushed once. TRIG is one of the few keys that is not disabled when in Remote operation. See *Triggering Measurements* for details about the Product Trigger subsystem. TRIG starts data capture when in digitize.
22	F1 F2 F3 F4 F5	Five softkeys that select the menu item noted directly above each respective key.
23	GROUND	Five-way binding post connected to earth ground through the earth ground connector on the mains plug. This terminal does not illuminate.
24	GUARD	This five-way binding post in the External Guard OFF state is isolated from any internal connections, and the internal guard shields are connected to the internal 0 V. In the External Guard ON state, the internal guard shields are disconnected from the internal 0 V and connected to the GUARD terminal of the selected front or rear input. In the Ohms or PRT functions, the External Guard ON selection is modified to provide an ohms guard. To set the condition of the External Guard (ON or OFF) push INPUTS to access F4 (**Ext. Guard**). Guarding is explained throughout this manual. When set to Ext. Guard ON, this terminal illuminates.

Rear-Panel Features

Rear-panel features (including all terminals, sockets, and connectors) are shown and described in Table 4.

Note

The rear-panel terminals do not have Visual Connection Management active terminal illumination.

Table 4. Rear-Panel Features

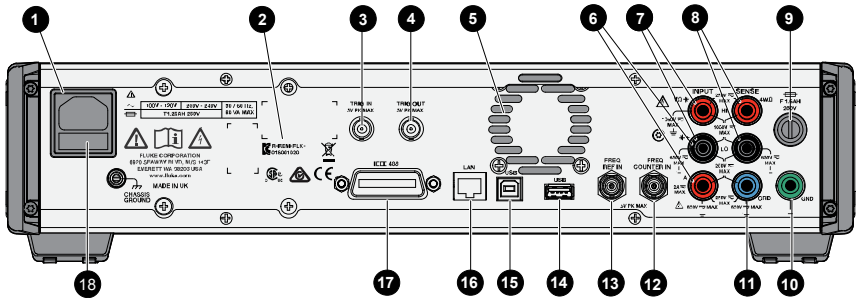

iei002.emf

Number	Name	Function
1	AC power input connector	A grounded male three-prong connector for the mains power cord that also houses the mains fuse.
2	Serial number	The Product Serial Number.
3	**TRIG IN**	This co-axial BNC socket can be used to trigger a measurement when external triggers are enabled. The trigger in signal can be either a TTL or Bipolar, with either a negative or positive slope. See *Triggering Measurements.*
4	**TRIG OUT**	This co-axial BNC socket outputs a signal when a specified measurement event occurs. The signal may be a TTL edge or a square wave which is active during a particular process. This signal is used to synchronize external equipment to the Product and is comparable to the HP/Agilent/Keysight 3458A EXT OUT output. See *Input Terminals Selection*.
5	Fan access holes	Access holes for the internal fan. Air is expelled from the Product for internal cooling through these holes. See *Cooling Considerations*.
6	**INPUT**, **A HI** and **LO**	A pair of five-way binding posts for current measurements. Signals up to 2 A rms can be applied to these terminals.
7	**INPUT**, **V HI** and **LO**	A pair of five-way binding posts for voltage, ohms, capacitance, 2-wire PRT, and thermocouple measurements. On the 8588A, these binding posts also connect to the output of external current shunts. Frequency can be measured via these terminals. Signals up to 1050 V rms can be applied to these terminals.
8	**SENSE**, **V HI** and **LO**	A pair of five-way binding posts for 4-wire resistance measurements. They are the sense terminals in 4-wire Ω and 3- and 4-wire PRT.

Table 4. Rear-Panel Features (cont.)

Number	Name	Function
9	Fuse holder	Holds the fuse that is in series with the rear Input A Hi input. F1.6AH 250 V fuse protects the current-measuring circuity when using the rear terminals for signal input.
10	**GROUND**	Five-way binding post connected to earth ground through the earth ground connector on the mains plug.
11	**GUARD**	This five-way binding post in the External Guard OFF state is isolated from any internal connections, and the internal guard shields are connected to the internal 0 V. In the External Guard ON state, the internal guard shields are disconnected from the internal 0 V and connected to the GUARD terminal of the selected front or rear input. In the Ohms or PRT functions, the Ext. Guard ON selection is modified to provide an Ohms Guard. Guarding is explained throughout this manual.
12	**FREQ COUNTER IN**	This is a 50 Ω impedance input to the frequency counter function. See *Frequency Counter*. Measure a frequency input from the Volt INPUT HI-LO terminals, or through this BNC connector.
13	**FREQ REF IN**	A reference 10 MHz signal can be applied to this BNC connector to provide the Product with an external frequency reference. Intended to be used in a system where several devices are phase locked to a common reference and can reduce trigger latency.
14	USB Type A connector	USB port to allow transfer of the Product's readings to a USB memory stick. This port is capable of providing 5 V at 0.5 A maximum, and supports an external keyboard (but not a mouse). See *Memory Setup*.
15	USB Type B connector	USB port for port for remote control of the Product. See *USB Interface*. See the *Remote Programmer's Manual.*
16	LAN connector	10/100/1000 Base/T Ethernet connector for remote control of the Product. *Remote Interface Setup* in the *Remote Programmer's Manual* describes proper cabling, how to set up the interface, and how to transmit data from the Product. *Remote Interface Setup* also describes how to use the Ethernet interface for remote control. See the *Remote Programmer's Manual.*
17	IEEE-488 connector	A standard GPIB interface connector to operate the Product in remote control as a Talker or Listener on the IEEE-488 Bus. See *Remote Interface Setup* for bus connection. See the *Remote Programmer's Manual* for remote programming instructions.
18	AC mains fuse	The T1.25AH 250V mains fuses are accessible after removing the mains power cord. See *Maintenance*.

Operation

This section explains Product operation. See *Front and Rear Panel* for key and feature locations. Remote interface setups are explained in the *Remote Programmer's Manual.* The first part of this section is general and applies to all modes of operation.

Operating instructions are presented separately for each function.

Turn on the Product

⚠⚠Warning

To avoid electric shock, make sure that the Product is grounded before use.

Before you turn on the Product, see *Grounding the Product*.

To turn on the Product, push in the power switch on the front panel. When the Product is turned on, it takes approximately 20 seconds to complete its power-up process. During the power-up process, the Product goes through a series of self-tests. If a self-test fails, a prompt on the display identifies the failed test and prevents further operation. If the test fails, contact Fluke Calibration.

Power-Up State

After passing the power-up self-tests, the Product goes into the power-up state. When you turn on the power (with no input attached), the Product starts in DCV, 1000 V (1 kV) range.

Table 5 summarizes the non-volatile setup parameters and their factory defaults.

Table 5. Non-volatile Setup Parameter Factory Defaults

Setup Parameter	Factory Default (Value after Non-Volatile Memory Format)
Remote Port	GPIB
IEEE-488 Bus (GPIB) Address	18
Real Time Clock Date	Not changed
Real Time Clock Time	Not changed
Date Format	dd/mm/yyyy
Time Format	12 hour
Language	English
Display Brightness	50 %
Backlight dimmer	30 minutes
Line Frequency	50 Hz
Trigger Out	Signal acquired
GPIB EOL setting	EOI
Ethernet Settings	Several of them including LXI settings
USB Remote interface	Computer
USB EOL	CRLF
Emulation mode	None
Active calibration stores	Certified
Math	OFF
Math constants	Not changed

Warmup Requirements

You can use the Product as soon as it has completed its self-tests, but a 3-hour warm-up period is required to ensure that the Product meets or exceeds its specifications. See *Specifications.*

If you turn off the Product after it has warmed up, allow it to warm up again for at least twice the length of time it was turned off (up to a maximum of 3 hours). For example, if the Product is turned off for 10 minutes, allow it to warm up again for at least 20 minutes.

Functions

The subsequent sections explain the different functions of the Product.

DC Voltage

The DC Voltage function provides 2-wire measurements using the V INPUT HI and LO Input terminals. Push DCV to use the DC Voltage (DCV) function.

The ranges available are:

100 mV to 1000 V, where the 100 mV to 100 V ranges provide 202 % overrange, for example, the 1 V range displays up to 2.02 V. The 1000 V range can measure up to 1050 V.

DCV Menu

This section explains the available DCV menu.

F1 (**Range**): Each of the dc V ranges can be manually selected or select Auto to put the Product into Autorange. Make the range selection with the softkeys or use the navigational keys to highlight the selection and push SELECT. Push BACK to return to the start page of the menu.

F2 (**Resolution**): DCV has resolution from 4 1/2 digits to 8 1/2 digits. Select resolution with the softkeys or use the navigational keys to highlight the selection and push SELECT. Push BACK to return to the start page of the menu. The A to D aperture times associated with each resolution setting are shown in the Product specifications. See *Specifications*.

F3 (**Z in**): DCV has selectable input impedances. Auto provides 1 TΩ for the 100mV, 1V, and 10V ranges, and 10 MΩ for the 100V and 1kV ranges. 10 MΩ provides 10 MΩ input impedance for all five ranges. Use 1 MΩ for ac/dc transfers where the ac input impedance is set to 1 MΩ. Make the input impedance selection with the softkeys or use the navigational keys to highlight the selection and push SELECT. Push BACK to return to the start page of the menu.

F5 (**Measure Setup**): Sets the integration time of the A to D converter. The choices are:

- Auto
- Auto Fast
- Manual

When you select **Manual**, use the softkeys and the numerical keypad to edit the integration time by PLC and Time. The smallest time aperture is 0 seconds with 200 ns increments and has an upper time limit of 10 seconds.

PLC refers to Power Line Cycles. A PLC at a 50 Hz line is 20 ms; a PLC at a 60 Hz line is 16.67 ms. The smallest aperture that can be set by PLC is 0.01. The upper limit is the PLC equivalent of 10 seconds so is determined by the line frequency setting in the Instrument Setup menu. For a 50 Hz line setting, the maximum is 500 PLC, for a 60 Hz setting it is 600 PLC.

When the aperture is set by time, the display shows the nearest equivalent PLC to 0.01 PLC precision. When the aperture is set by PLC, the display shows the aperture in seconds with 200 ns resolution.

Use the navigation keys and SELECT to choose the aperture setting method. The aperture settings for Auto and Auto Fast for different resolution settings are shown in Table 8.

Measure DC Voltage

The sections below explain how to accurately measure dc voltage.

Simple Lead Connections

For the majority of applications, the simple lead connection without external guard is adequate as in Figure 2. Use INPUTS and then F4 (**Ext. Guard OFF**). See *Input Terminal Selection (INPUTS)*. The disadvantage of this arrangement is that the lead connection can form a loop. If a stray alternating magnetic field (from the line transformer of a neighboring instrument, for example) passes through the loop, it behaves as a single-turn secondary winding inducing unwanted ac voltages into the measuring circuit. Use a twisted-pair to reduce the loop area and adjacent twists will cancel any induced voltages. If you encounter problems with stray pick-up, Fluke Calibration recommends that you use a shielded twisted-pair cable with the screen connected to the INPUT LO terminal at the source as shown in Figure 3.

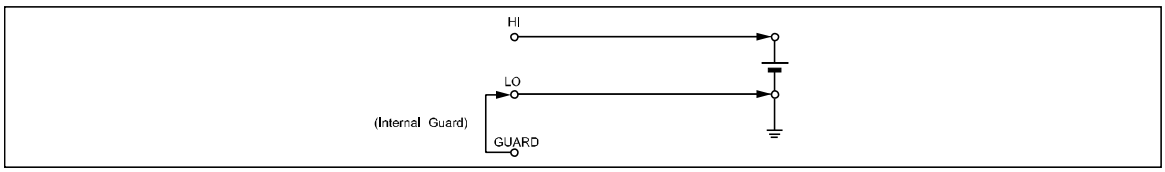

adj059f.emf

Figure 2. Simple Lead Connections

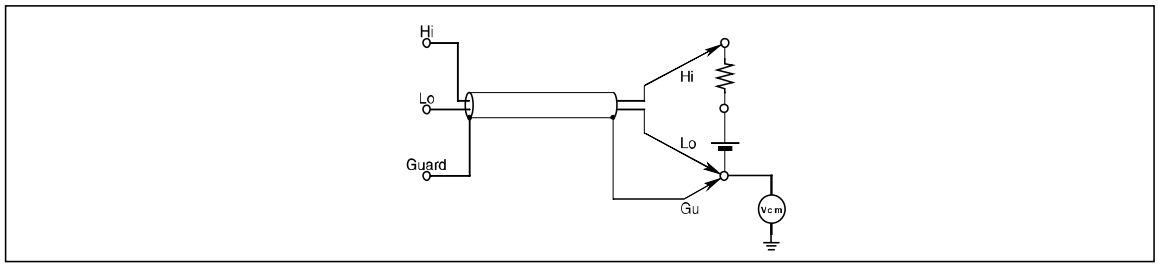

adj060f.emf

Figure 3. Twisted-Pair Cable Connections

Common Mode Rejection - Use of External Guard Connection

When the source presents an unbalanced impedance to the measuring terminals, and common mode voltages are present, use the GUARD terminal with External Guard selected. Use INPUTS and then F4 (**Ext. Guard**) to activate the GUARD terminal. See *Input Terminal Selection (INPUTS)*. Regardless of how the INPUT HI and LO terminals are connected, the GUARD terminal should be referred to the source of common mode voltage, see Figure 4. This minimizes errors caused by common mode currents in the measuring circuit by providing a separate common mode current path.

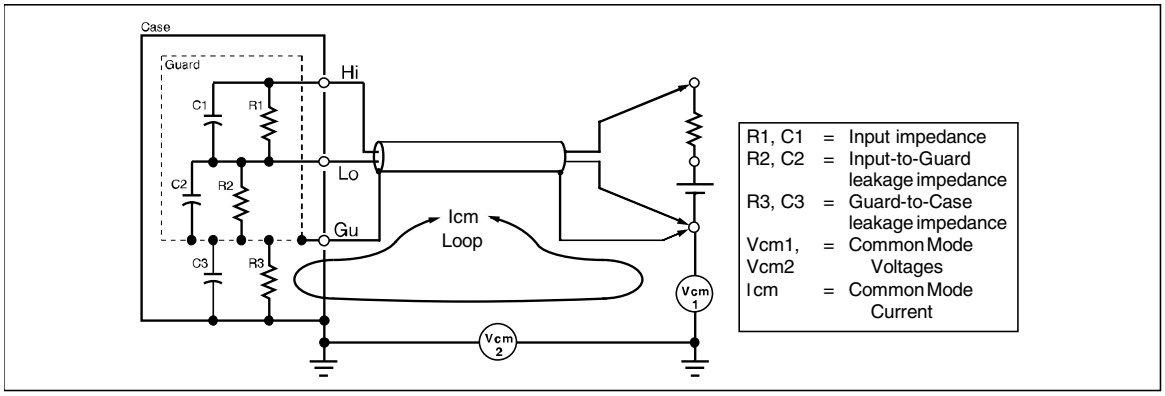

adj061f.emf

Figure 4. External Guard Connections

AC Voltage

The AC Voltage function provides 2-wire measurements using the V INPUT HI and LO terminals. Push ACV to use the AC Voltage (ACV) function. The Product makes true-rms ac voltage or ac+dc voltage measurements using a proprietary sampling method with up to 10 MHz bandwidth. These ranges are available:

10 mV to 1000 V, where the 10 mV to 100 V ranges provide 121.2 % overrange. Full scale is 121.2 % of range for these ranges. For example, the 1 V range can show up to 1.212 V. The 1000 V range can measure up to 1050 V rms.

Input impedance is selectable from 10 MΩ, 1 MΩ, or Auto when dc coupled. Auto selects the highest impedance available.

AC Voltage Menu

This section explains the AC Voltage (ACV) menu. See the screen below.

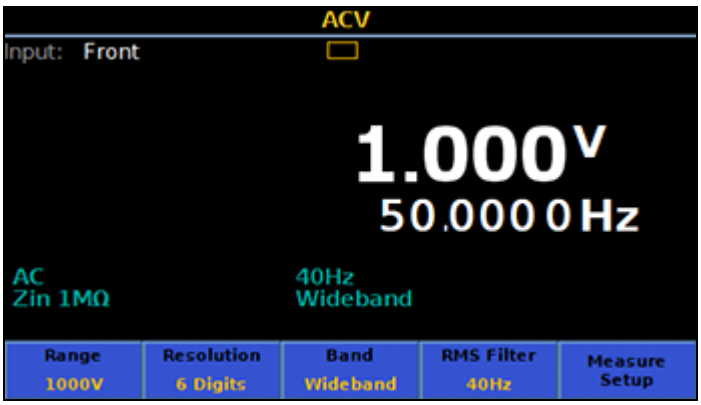

iei005.png

F1 (**Range**): Select each of the ac V ranges manually or select Auto to put the Product into Autorange. Make the range selection with the softkeys or use the navigational keys to highlight the selection and push SELECT.

F2 (**Resolution**): ACV has resolution from 4 1/2 digits to 7 1/2 digits. The default is 6 1/2 digits. To choose the resolution, use the softkeys or the navigational keys. Push the navigational keys to highlight the selection and then push SELECT.

F3 (**Band**): ACV has selectable-bandwidth settings.

The Product has these available settings:

- Wideband (default)
- Extended High Frequency

Most applications should use Wideband which measures signals up to 2 MHz and where the wave shape of the signal is not necessarily known. It is the default setting and is a general-purpose ac voltage measurement function.

Extended High Frequency extends the ACV frequency range to 10 MHz. This mode is about three times slower and less accurate than Wideband.

F4 (**RMS Filter**): Push to select various filters for the rms converter, allowing measurements down to the chosen filter frequency without degradation of accuracy and excessive reading variation. One of the filters is always in circuit. The 40 Hz filter is the default selection at power on. The filter choices available are 0.1 Hz, 1 Hz, 10 Hz, 40 Hz, 100 Hz and 1 kHz. See *Specifications*. Use the softkeys or the navigational keys to highlight the selection and then push **SELECT**. Push **BACK** to return the Product to the previous menu.

F5 (**Measure Setup**): Has parameters that can be set up for ac voltage measurements. Use the softkeys or the navigational keys to highlight the selection and then push **SELECT**. Push **BACK** to return the Product to the previous menu. See the screen below:

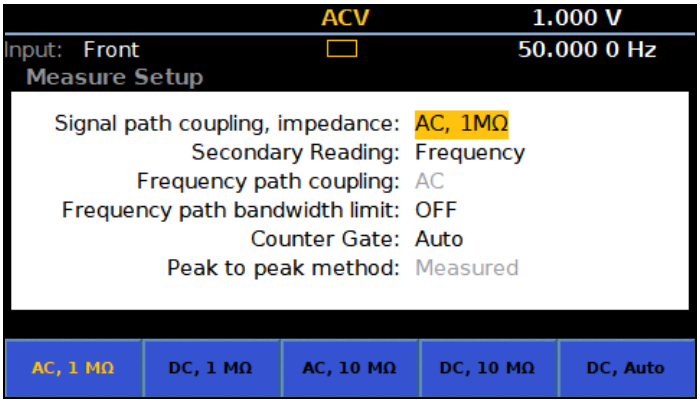

iei022.png

The parameters under this menu are:

- **Signal path coupling, impedance:** (note that this selection determines what is available in Frequency path coupling) these different combinations of signal path coupling and impedance are available:
  - **F1** (**AC, 1 MΩ**)
  - **F2** (**DC, 1 MΩ**)
  - **F3** (**AC, 10 MΩ**)
  - **F4** (**DC, 10MΩ**)
  - **F5** (**DC, Auto**)

  Most applications should use the 1 MΩ input impedance (default) as the 10 MΩ input has relaxed specifications. DC Auto selects the highest impedance available for any given range.

- **Secondary reading:** The ACV function can show a secondary reading.

  The choices are:

  - F1 (**OFF**) (none)
  - F2 (**Frequency**)
  - F3 (**Period**)
  - F4 (**Pk to Pk**)
  - F5 (**More**)
  - F1 (**Pk to Pk**) (Repeated for ease of use)
  - F2 (**Crest Factor**)
  - F3 (**Positive Peak**)
  - F4 (**Negative Peak**)

  When you select **Pk to Pk**, the last submenu in ACV Measure Setup, **Peak to peak method** becomes active (see *Peak to peak method* below).
- **Frequency path coupling**: Frequency path coupling can be either ac or dc if the **Signal path coupling, impedance** (above) is set to any of the dc settings. Otherwise, only ac is available and this submenu is inactive.
- **Frequency path bandwidth limit**: (OFF or ON). Reduces noise in the frequency counter signal path. If there is excessive noise, turn the bandwidth limit ON for signals <2 MHz.
- Counter Gate can be set to:
  - F1 (**Auto**)
  - F2 (**1 ms**)
  - F3 (**10 ms**)
  - F4 (**100 ms**)
  - F5 (**1 s**)

The counter gate auto times are related to the RMS filter and shown in Table 6.

Table 6. Counter Gate Auto Times

RMS Filter	Gate Times
0.1 Hz	1 s
1 Hz	1 s
10 Hz	100 ms
40 Hz	100 ms
100 Hz	10 ms
1 kHz	10 ms

In auto, the gate time is the longest of the cardinal times that will not reduce the reading rate. If the gate time is set manually, the reading rate is the longest of RMS filter and gate times.

ACV measurements wait for both the RMS filter settling and the counter gate, whichever is the longer. If you select long counter gate times, this may slow the reading rate. The auto times are chosen to not slow the read rate.

- **Peak to peak method**: This submenu is active when the Secondary Reading is set to Pk to Pk. Measured shows the peak to peak as measured in ACV assuming no particular signal wave form. Sine, Square, Triangle, and Truncated Sine specify the signal wave form that is measured, and calculates the peak to peak based on the rms value. For example, if set to Sine, the peak to peak displayed is 2 x (square root of 2) x rms. Square is 2 x rms, Triangle is 2 x (square root of 3) x rms, and Truncated Sine is 4.618803 x rms. Use the Square, Triangle and Truncated Sine selections to measure the peak-to-peak output of multi-product calibrators like the Fluke 5522A which have these non-sine wave outputs.

Measure AC Voltage

The sections below explain how to accurately measure ac voltage.

Induced Interference

If interference signals are present or lead interference (noise) takes place during ac measurements, any induced interfering signals combine with the measured signal to result in measurement errors. In some circumstances, it may be possible to filter out the unwanted external signals, but it is generally more effective to reduce the interference before it is induced. Accomplish this by operating in a quiet environment, for example, using a screened cage if possible and using twisted or shielded measurement leads as discussed below.

Common Mode Rejection

The principles of external guarding, outlined in the description of dc voltage measurement, apply generally to ac voltage measurement. For ac, you gain further advantage by using the external guard as a shield for the input leads.

Lead Considerations

In all cases, improve ac voltage measurement accuracy by shortening the leads to the minimum-practical length. Doing this reduces lead capacitance, lead inductance, and loop area.

Fluke Calibration recommends shielded twisted pair leads for low-frequency measurements and coaxial leads for low and high frequency measurements. Take care to avoid measurement errors from the interaction of lead capacitance and inductance with any source output impedance. For additional information and guidance, see the Fluke publication *Calibration: Philosophy in Practice* (ISBN 0-9638650-0-5). See the ACV Reading Rate for RMS Filter Settings Specification in the specifications. See *Specifications*.

DC Current

The DC Current function provides current measurement using the INPUT A and LO terminals. Push DCI to put the Product into the DC Current (DCI) function.

- Full scale is 202 % of range, except the 30 A range. For example the 1 A range can display up to 2.02 A.
- The front terminals are electronically-protected and measure up to 30 A (8588A) or 2 A (8558A).
- The rear terminals are protected with a user-replaceable fuse on the rear panel and measure up to 2 A.

DCI Menu

This section explains the DCI menu.

F1 (**Range**): Each of the ranges can be selected or the Product can be put into autorange by selecting Auto. The ranges available are 10 µA to 30 A for the 8588A and up to 1 A (202 % overrange) for the 8558A. Resolutions vary from 7 1/2 digits to 4 1/2 digits. 10 µA to 10 A ranges provide 202 % overrange.

The 30 A range can measure up to 30.2 A.

Note

10 A and 30 A ranges are not available when using the rear inputs.

Make the range selection with the softkeys or use the navigational keys to highlight the selection and push SELECT.

F2 (**Resolution**): DCI has resolution from 4 1/2 digits to 7 1/2 digits. The default is 7 1/2 digits. Make the resolution selection with the softkeys or use the navigational keys to highlight the selection and push SELECT.

F5 (**Measure Setup**): Push to select the Measure Setup which has selections for the reading rate. The choices are:

- Auto
- Auto Fast
- Manual

When Manual is selected, PLC and Time can be edited with the softkeys and the numerical keypad. Push F1 (**Edit PLC**) or OFF F2 (**Edit Time**).

Measure DC Current

The Product measures current with the INPUT A and INPUT LO terminals. The current should flow from the source's high terminal into the multimeter A terminal and back to the source's low terminal out of the multimeter LO terminal.

Similar connection considerations are required for dc current measurement as for dc voltage measurement. Use shielded twisted-pair cable to reduce induced interference signals, and connect GUARD to the source of common-mode voltage to provide a separate common-mode current path.

⚠⚠ Warning

HIGH CURRENT FLOW

To prevent possible electrical shock, fire, or personal injury,

- **Do not exceed the Measurement Category (CAT) rating of the lowest rated individual component of a Product, probe, or accessory.**
- **Only use probes, test leads, and accessories that have the same measurement category, voltage, and amperage ratings as the Product. High current can cause excessive heating of underrated conductors and may cause a fire.**

Note

The current path between the Product terminals is not made when the current functions are not in use or when front or rear terminals are deselected.

The rear input terminals may be used to measure currents up to 2 A only. The rear input A terminal does not share the front panel automatic protection circuitry, and is instead protected by a fuse mounted on the rear panel.

Maximum input current capability and protection: The front input terminals may be used to measure currents up to 30.2 A with protection for all ranges up to 30.2 A. The front input A terminal protection for current ranges 1 A and lower has an overload protection feature if the input significantly exceeds full range. This protection is automatic and self-resetting, and does not interrupt current flow. It remains engaged for 1 second after the overload is removed to minimize circuit interaction and relay reactivation.

⚠Caution

Damage will occur if >30.2 A is applied to the front current terminals and the current source maximum compliance is >5 V.

AC Current

The AC Current function provides measurements that use the INPUT A and LO Input terminals. Push ACI to put the Product into the AC Current (ACI) function. The AC Current function features 8 ranges (10 µA to 30 A) for the 8588A and 6 ranges (10 µA to 1 A) for the 8558A. The 10 µA, 100 µA, 1 mA, 10 mA, 100 mA and 10 A, ranges provide 202 % overrange. For example, the 10 A range displays up to 20.2 A. The 30 A range measures up to 30.2 A.

Note

The 10 A and 30 A ranges are not available on the rear inputs.

Resolution can be set from 7 1/2 digits to 4 1/2 digits. The default is 6 1/2 digits of resolution.

The Product uses a proprietary sampling method to make true-rms ac current measurements.

ACI Menu

The available ACI menu softkeys are explained below:

F1 (**Range**): Each of the ranges can be selected or the Product can be put into autorange by selecting Auto. Make the range selection with the softkeys or use the navigational keys to highlight the selection and push SELECT.

F2 (**Resolution**): ACI has resolution from 4 1/2 digits to 7 1/2 digits. The default is 6 1/2 digits. Make the resolution selection with the softkeys or use the navigational keys to highlight the selection and push SELECT.

Note

ACI, unlike ACV, has no Band selection. The Product uses the wideband setting for all ACI measurements, measuring signals up to 100 kHz.

F4 (**RMS Filter**): Provides selection of various filters for the rms converter. These filters allow measurements to be made down to the chosen filter frequency without degradation of accuracy and excessive reading variation. One of these filters is always in the circuit. The 40 Hz filter is the default selection at power on. The filter choices available are 0.1 Hz, 1 Hz, 10 Hz, 40 Hz, 100 Hz and 1 kHz. Make the selection with the softkeys or use the navigational keys to highlight the selection and push SELECT. The filter setting determines the reading rate in ACI. See the specifications for the AC filter settings and reading rates. See *Specifications*.

F5 (**Measure Setup**): The Measure Setup softkey in ACI menu has parameters that can be set up to make ac current measurements. Parameter choices are:

- Signal path coupling
- Secondary Reading
- Frequency path coupling
- Frequency path bandwidth limit
- Period/Frequency resolution
- Peak to peak method

Make the selection with the softkeys or use the navigational keys to highlight the selection and push SELECT. See *ACI Measure Setup*.

ACI Measure Setup

There are parameters in the ACI Measure Setup menu that can be changed.

- **Signal path coupling**: Choose F1 (**AC**) or F2 (**DC**).

  Note

  This coupling affects the signal at the output of the Products internal current shunt, as the input signal is always directly connected to the Product internal current shunt.

- **Secondary Reading:** In the ACI function, a secondary reading can be shown. The menu choices are:
  - F1 (**OFF**) (none)
  - F2 (**Frequency**)
  - F3 (**Period**)
  - F4 (**Pk to Pk**)
  - F5 (**More**) additional Secondary Reading parameters
    - F1 (**Pk to Pk**) (repeated here for ease of use)
    - F2 (**Crest Factor**)
    - F3 (**Positive Peak**)
    - F4 (**Negative Peak**)
    - F5 (**More**) Push to return to the primary menu parameters.

  When **Pk to Pk** is selected, the last submenu in ACV Measure Setup, **Peak to peak method** becomes active. (see below).

- **Frequency path coupling**: The frequency path coupling can be AC or DC if the **Signal path coupling,** impedance (above) is set to any of the dc settings. Otherwise, only ac is available and this submenu is not operational.
- **Frequency path bandwidth limit**: Choose F1 (OFF) or F2 (ON). Reduces noise in the frequency counter signal path. If there is excessive noise observed, turn the bandwidth limit ON for signals <70 kHz.
- **Counter Gate**: Set to:
- F1 (**Auto**)
- F2 (**1ms**)
- F3 (**10ms**)
- F4 (**100ms**)
- F5 (**1s**)

The counter gate auto times are related to the RMS filter and shown in Table 7.

Table 7. Counter Gate Auto Times

RMS Filter	Gate Times
0.1 Hz	1 s
1 Hz	1 s
10 Hz	100 ms
40 Hz	100 ms
100 Hz	10 ms
1 kHz	10 ms

In auto, the gate time is the longest of the cardinal times that will not reduce the reading rate. If the gate time is set manually, the reading rate is the longest of RMS filter and gate times.

ACI measurements wait for both the RMS filter settling and the counter gate, whichever is the longer. If you select long counter gate times, this may slow the reading rate. The auto times are chosen to not slow the read rate.

- **Peak to peak method**: This submenu is made active when the Secondary Reading is set to Pk to Pk.
  - **Measured** (F1) shows the peak to peak as measured in ACI assuming no particular signal wave form.
  - F2 (**Sine**)
  - F3 (**Square**)
  - F4 (**Triangle**)
  - F5 (**Truncated Sine**)

F2 through F5 specify the signal wave form type that is measured, and calculates the peak to peak based on the rms value.

For example, if set to:

- Sine, the peak to peak shown is 2 x (square root of 2) x rms
- Square is 2 x rms
- Triangle is 2 x (square root of 3) x rms
- Truncated Sine is 4.618803 x rms

The Square, Triangle and Truncated Sine selections are useful to measure the peak-to-peak output of multi-product calibrators like the Fluke 5522A which have these non-sine wave outputs.

Measure AC Current

The Product measures ac current with its INPUT A and INPUT LO terminals.

Similar connection considerations are required for ac current measurement as for ac voltage measurement. Use shielded twisted pair cable to reduce induced interference signals, and connect GUARD to the source of common mode voltage with the screen, to provide a separate common mode current path. The Product minimizes the burden (compliance) voltage generated for current measurements and thus, improves measurement accuracy. Fluke Calibration recommends that leads of the minimum-practical length be used to reduce lead capacitance, lead inductance, and loop area.

When you make ac current measurements pay close attention to the lead impedance, especially lead capacitance at high frequencies on the lower current ranges. (See *Measure AC Voltage*)

⚠⚠ Warning

HIGH CURRENT FLOW

To prevent possible electrical shock, fire, or personal injury, do not exceed the Measurement Category (CAT) rating of the lowest rated individual component of a Product, probe, or accessory.

Only use probes, test leads, and accessories that have the same measurement category, voltage, and amperage ratings as the Product.

Note

The current path between the Product terminals is not made when the current functions are not in use or when front or rear terminals are deselected.

The rear input terminals may be used to measure currents up to 2 A only. The rear input A terminal does not share the front panel automatic protection circuitry, and is instead protected by a fuse mounted on the rear panel.

Maximum input current capability and protection: The front input terminals may be used to measure currents up to 30.2 A with protection for all ranges up to 30.2 A. The front input A terminal protection for current ranges 1 A and lower has an overload protection feature if the input significantly exceeds full range. This protection is automatic and self-resetting, and does not interrupt current flow. It remains engaged for 1 second after the overload is removed to minimize circuit interaction and relay reactivation.

⚠Caution

Damage will occur if >30.2 A is applied to the front current terminals and the current source maximum compliance is >5 V.

Resistance

Push OHMS to use the Resistance Measurement (Ohms) function. The Resistance Measurement function provides 2-wire measurements using the INPUT HI and LO terminals, or 4-wire measurements when you use the HI and LO SENSE terminals. The available ranges are 1 Ω to 10 GΩ, all with 202 % overrange.

Ohms Menu

This section explains the Ohms menu.

F1 (**Range**): Range selection is made with this softkey and the navigational keys. The ranges available change with ohms mode. In 2W and 4W Normal, and 4W Tru you choose Auto or from 1 Ω to 1 GΩ. In 2W and 4W HV mode, the ranges available are 10 MΩ to 10 GΩ. Highlight the choice and then push SELECT.

F2 (**Resolution**): Resistance has resolution from 4 1/2 digits to 8 1/2 digits. The default is 7 1/2 digits. Choose the resolution with the softkeys or use the navigational keys and push SELECT.

F3 (**Mode**): There are five resistance modes, 2W Normal, 4W Normal, 4W Tru, 2W HV, and 4W Hv. See *Resistance Modes*.

F4 (**LoI**): This softkey is context sensitive, available for all modes except 2W HV and 4W HV. For many of the ohms ranges, LoI **ON** changes the measurement current which reduces the self-heating in the DUT or to avoid conduction of any parallel semi-conductor junction. The same 10 ranges, 1 Ohm to 1 G Ohm, are available with LoI **ON** or **OFF**. The range and current used for any range are shown in the information portion of the display. See Table 9 for the current stimulus used based on the Product ohms range.

Note

With LoI **ON***, the behavior of auto ranging is modified such that the Product will not auto range up from the 10 kΩ to 100 kΩ range, nor from the 100 MΩ to 1 GΩ range. This algorithm was chosen since the voltage compliance changes from 0.2 V to 2 V and 2 V to 20 V on the respective range transitions. The higher compliance may adversely affect a semi-conductor junction. The auto range down behavior is the same as LoI* **OFF***.*

F5 (**Measure Setup**): Sets the aperture of the A to D converter and the Ohms Filter. Aperture choices are:

- Auto, Auto Fast
- Manual

When you select Manual, use the softkeys and the numerical keypad to edit the aperture by PLC and Time. The smallest time aperture is 0 ns with 200 ns increments and has an upper time limit of 10 seconds.

PLC refers to Power Line Cycles. A PLC at a 50 Hz line is 20 ms; a PLC at a 60 Hz line is 16.67 ms. The smallest aperture that can be set by PLC is 0.01. The upper limit is the PLC equivalent of 10 seconds so is determined by the line frequency setting (Instrument Setup). For a 50 Hz line setting, the maximum is 500 PLC, for a 60 Hz setting it is 600 PLC.

When the aperture is set by time, the display shows the nearest equivalent PLC to 0.01 PLC precision. When the aperture is set by PLC, the display shows the aperture in seconds with 200 ns resolution.

Use the navigation keys and **SELECT** to choose the aperture setting method. The aperture settings for Auto and Auto Fast for different resolution settings are shown in Table 8.

Table 8. Aperture Settings

Resolution	Auto Fast	Auto
4	200 µs	2 ms
5	2 ms	1 PLC
6	1 PLC	0.1 s
7	0.2 s	1 s
8	2 s	10 s

The Ohms Filter is selected using the navigation keys and either F1 OFF or F2 ON. The Ohms filter is a single-pole analog filter for increased noise rejection. The Filter annunciator in the information portion of the display indicates that the filter is active. The ohms filter is not available in 4W Tru Ohms.

Note

The pole or time constant of the filter is formed by a 22 nF capacitor across the resistance under test.

Note

The selected range and resolution are remembered across Normal, Tru ohm, and HV modes. For example, if Auto and 8 Digits are set in 2W Normal, they are also set in 4W Normal. If 4W Tru ohm is set to the 100 ohm range and 7 digits, this does not affect the 2W and 4W Normal Range and Resolution settings. The same is true for 2W and 4W HV ohms modes, they have their own range and resolution settings.

LoI can be set individually for 2W Normal, 4W Normal, and 4W Tru, and is remembered across these modes.

The Aperture setting (under Measure Setup) holds true for all of the ohms modes, so once set, it used for all of the modes.

The Filter ON setting applies to the specific mode it was turned ON in. and can be individually set for any of the modes, except 4W Tru which does not allow Filter ON.

Resistance Modes

In the Ohms menu, when **F3** (**Mode**) is pushed, different modes for making resistance measurements are presented:

- **2W Normal Ω** : This is the default setting and uses stimulus currents that balance minimal self-heating of the resistance being measured with low reading noise. 10 ranges are available, 1 Ω to 1 GΩ. 2-wire measurements are made in this mode. The range and current used for that range are shown in the information portion of the display. See Table 9 for the current stimulus used based on the Product ohms range.
- **4W Normal**: This setting is the same as 2W Normal except the measurements are made using the 4-Wire measurement method.
- **4W Tru Ω** : Using the 4-Wire measurement method, this mode uses a Tru Ohms configuration and makes two measurements per reading, where the second measurement is made with the current reversed relative to the first measurement. The two measurements are combined to eliminate the effects of any external EMFs that may be present. This mode provides 4-wire measurements of resistance, in decade ranges from 1 Ω to 10 kΩ, and Auto Ranging. The stimulus current is fed through the test resistance from the Product's INPUT HI and LO terminals, and the resulting potential difference is sensed by the SENSE HI and LO terminals. The range and current used for that range are shown in the information portion of the display. See Table 9 for the current stimulus used based on the Product ohms range.

- **2W HV Ω**: This mode provides 2-wire measurements of resistance, in decade ranges from 10 MΩ to 10 GΩ. The measurement is performed at High Voltage using a current source with high compliance. The resulting increase in current through the unknown resistor reduces uncertainties due to leakage and bias current. HV Ω may also be used in conjunction with the Normal Ω mode to determine voltage coefficient in the unknown resistor. The MAXIMUM voltage that could appear across the measured resistor is 240 V. No autoranging is provided in this function. The range and current used for each range are shown in the information portion of the display. See Table 9 for the current stimulus used based on the ohm range of the Product.
- **4W HV Ω:** This mode is the same as 2W HV ohms except it uses the 4-Wire measurement method.

⚠⚠Warning

To prevent possible electrical shock, fire, or personal injury:

- **Do not connect external capacitance >50 nF to the Product terminals. The maximum voltage across the measured resistor or open Product terminals while using the HV Ω function is 240 V. The maximum current that the Product will source while using HVΩ is 10 µA (LO to HI), or 2.0 mA (GUARD to HI if Ext. Guard is selected). These characteristics are not considered "Hazardous Live" within the Safety standards applied to this product. However, capacitors (>50 nF) external to the Product could accumulate LETHAL charge while making a HVΩ measurement. Do not touch the Product terminals or circuitry under test unless you are sure it is safe to do so.**
- **Do not exceed the Measurement Category (CAT) rating of the lowest rated individual component of a Product, probe, or accessory.**
- **Only use probes, test leads, and accessories that have the same measurement category, voltage, and amperage ratings as the Product.**

Current stimulus values are shown in Table 9 for each of the five resistance modes.

Table 9. Ohms Stimulus Levels for Each Mode

Range	2W and 4W Normal	2W and 4W Normal with LoI ON	4W Tru Ω	Tru Ω LoI 4W Tru ohm with LoI ON	2W and 4W HV Ω
1 Ω	100 mA	100 mA	±100 mA	±100 mA	NA
10 Ω	10 mA	10 mA	±10 mA	±10 mA	NA
100 Ω	10 mA	1 mA	±10 mA	±1 mA	NA
1 kΩ	1 mA	100 µA	±1 mA	±100 µA	NA
10 kΩ	100 µA	10 µA	±100 µA	±10 µA	NA
100 kΩ	100 µA	10 µA	NA	NA	NA
1M Ω	10 µA	1 µA	NA	NA	NA
10 MΩ	1 µA	100 nA	NA	NA	10 µA
100 MΩ	100 nA	10 nA	NA	NA	1 µA
1 GΩ	10 nA	10 nA	NA	NA	100 nA
10 GΩ	NA	NA	NA	NA	10 nA

Measure Resistance

2-Wire Measurements

For many applications the simple 2-wire arrangement will be adequate. See Figure 5. However, the value shown includes the resistance of the connecting leads.

Use a shielded twisted-pair cable, preferably of PTFE insulation, to reduce induced voltages, induced charge and shunt leakage resistance, particularly where Rx is high.

2-wire resistance measurement is not available in a Tru Ohms configuration and is not well suited to use in the 1 Ω range even if the lead resistance is nulled out. In the latter case, zero compensation for lead and internal resistance contributions may limit full-scale readout. 2-wire measurements above 1.5 Ω should be made using higher ranges.

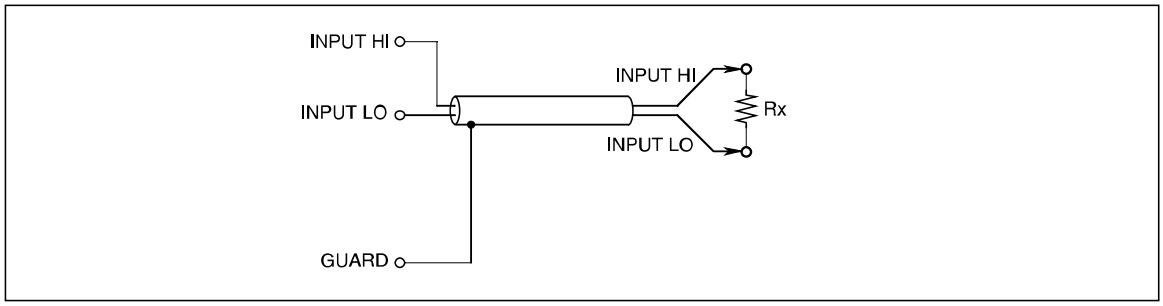

adj091f.emf

Figure 5. 2-Wire Measurements

4-Wire Measurements

With a 4-wire connection the lead resistances have negligible effect and only the value of Rx is displayed. See Figure 6.

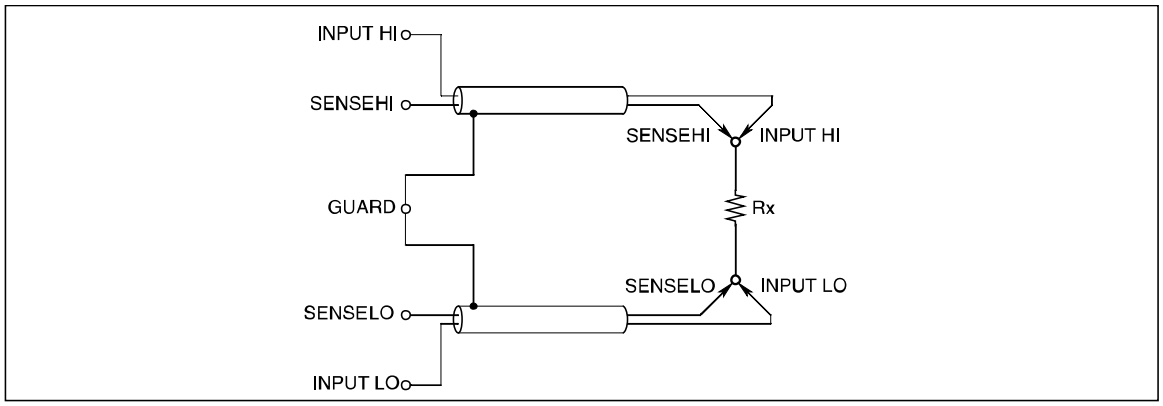

adj092f.emf

Figure 6. 4-Wire Measurements

4-Wire High-Resistance Measurements

When you make very high resistance measurements (above approximately 1 MΩ) a metal screen can be wrapped around the resistor to reduce noise, usually caused by charge injection. Connect the **GUARD** terminal to the screen to intercept leakage with the screen (in parallel with the unknown resistor). The resistor under test should not be grounded as this will make the measurement have greater noise. See Figure 7.

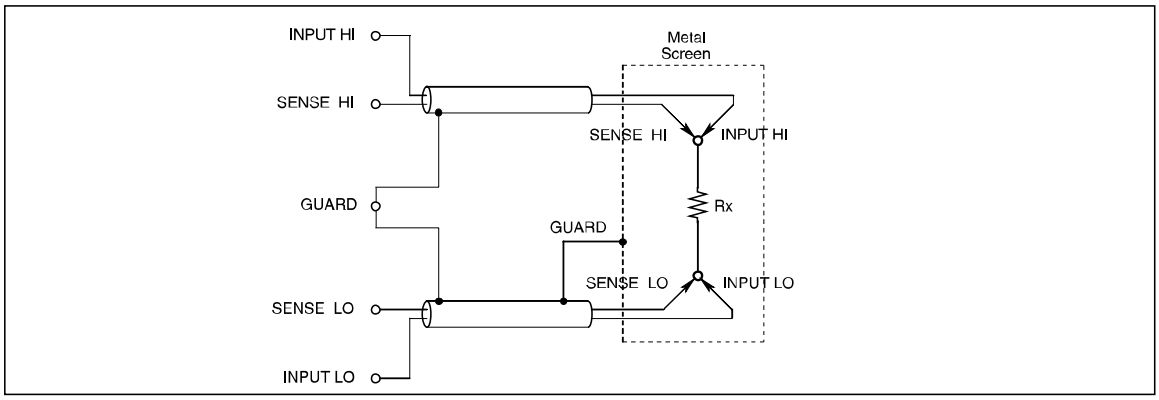

adj093f.emf

Figure 7. 4-Wire High-Resistance Measurements

4-Wire Resistance Zero

For accurate resistance measurements it is essential that a correctly connected zero source be used when you do an Input Zero operation before you make a series of measurements. The preferred arrangement shown in Figure 8 ensures that thermal and induced EMF effects, and bias current effects, associated with the Product and the measurement cables are eliminated.

Two precision 4-wire short accessories are supplied. See *Accessories*. Fitted over the INPUT HI, INPUT LO, SENCE HI and SENCE LO terminals these provide a convenient means of zeroing the Product inputs at the terminals. Use of the 4-wire short device at the Product terminals does not address potential sources of error within measurement cables.

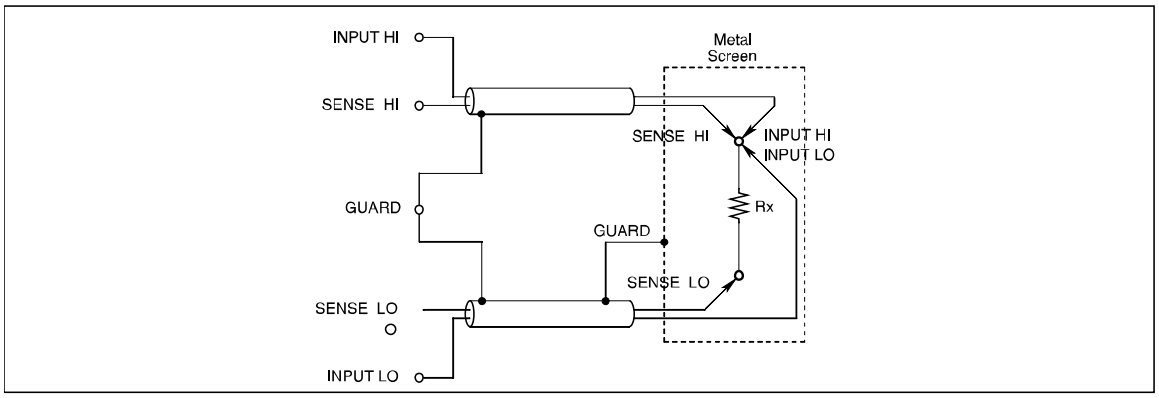

adj094f.emf

Figure 8. 4-Wire Resistance Zero Measurements

Ω Guard

In the Resistance function, with **Ext. Guard** selected (see also *Input Terminal Selection*), the GUARD terminal functions as an **Ω Guard**. Use the GUARD terminal as Ω Guard and the Ω Guard feature can make 'in-circuit' resistance measurements by guarding out parallel resistance paths. This results in only the value of Rx being shown.

Similarly, use **Ω Guard** to reduce the settling time if Rx is shunted by any capacitance and a suitable tapping point is available. The connections for making **Ω Guard** measurements are shown in Figure 9. Push INPUTS then select **Ext. Guard** to toggle external guard between ON and OFF. See Table 10.

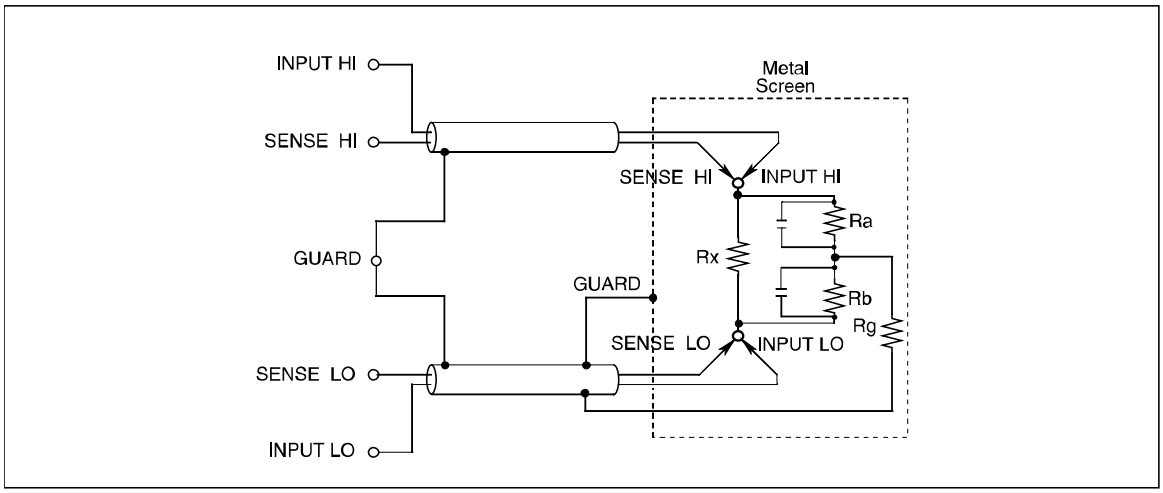

adj095f.emf

Figure 9. Ohms Guard Measurements

Table 10. Minimum Guard Resistances

Range	Minimum value for Ra and Rb
1 Ω, 10 Ω	100 Ω
100 Ω	1 kΩ
1 kΩ, 10 kΩ, 100 kΩ, 1 MΩ	10 kΩ
10 MΩ, 100 MΩ, 1 GΩ, 10 GΩ	100 kΩ

Providing that Ra and Rb are greater than the values shown in Table 10, and the **Ω Guard** resistance (Rg) is <1 Ω, the actual value can be calculated from the displayed value Rd by:

$$Rx = Rd \times (1 + E)$$

Deviation fraction 'E' can be found within 1 % by the simplified formula:

$$E = (Rd \times Rg) / (Ra \times Rb)$$

(Where Rg is the **Ω Guard** lead-resistance from the junction of Ra and Rb)

Example:

If Rd = 100 Ω, Rg = 1 Ω, Ra = Rb = 10 kΩ, then the value of E is given by:

$E = (100 \times 1) / (10\ k \times 10\ k) = 10^{-6}$ (1 ppm of readings)

The value of Rx is thus given by:

$Rx = 100 \times (1 + 10^{-6})$ Ohms,
$= 100.0001$ Ohms

Internal Guard Connections

External Guard not selected **(OFF)**: In the Ohms or PRT functions, the GUARD terminals on the front and rear panels are isolated from each other and from any internal connection. The internal guard shields and tracks are connected directly to the internal 0 V.

External Guard selected **(ON)**: In the Ohms or PRT functions, selecting the External Guard provides an Ohms Guard function. The internal guard shields, tracks, and the selected front or rear GUARD terminal are connected to the internal 0 V. See Figure 10. See *Input Terminal Selection* for more information.

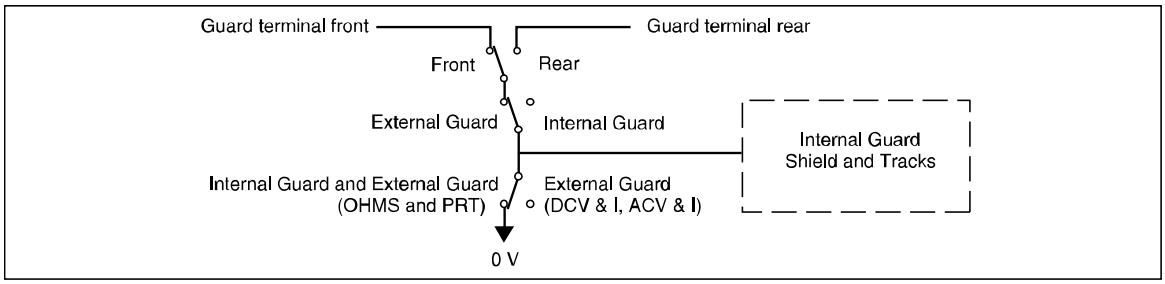

adj062f.emf

Figure 10. Internal Guard Connections

Digitize

The Digitize function captures a continuous analog signal in a sequence of discrete time intervals. One way to view the data is to use the Product's Analyze Frequency Domain Charting feature. With other post-processing using an external program, the captured data can be turned into even more useful information. An example is to transform the captured data by Fourier transform, to determine the relative phase angle and magnitude of harmonically related components in a signal. The Product has extensive triggering and timing capabilities to allow precise capture of the data for the Fourier transform. See *Triggering Measurements*.

All aspects of triggering a data acquisition in the Digitize function are controlled by the Product Trigger subsystem. See *Triggering Measurements* first to use Digitize to its maximum capability. There is a significant difference in the Trigger subsystem between Digitize and the other functions. The free-run trigger state, Initiate Continuous ON, is not supported in Digitize. When you push DIGITIZE, the Product Trigger subsystem is set to the idle state, Initiate Continuous OFF, and any current trigger cycle is aborted.

Note

Data acquisition in Digitize starts from the front panel when you push **TRIG** *or by a remote command. You cannot start an acquisition with* **RUN/STOP** *.* **RUN/STOP** *is normally used to toggle the Trigger subsystem from the free-run state (*Initiate Continuous ON*) to the idle state (*Initiate Continuous OFF*). Digitize does not have a free-run trigger state.* **RUN/STOP** *can be used to stop an acquisition if desired.*

Digitize uses a high-speed analog-to-digital converter to capture input signals. The Digitize function has a tracking circuit that follows the analog input. When a trigger occurs, the value on the tracking circuit is held, and converted to a digital value. The conversion process takes about 85 ns. Once the conversion is complete, tracking of the signal recommences. Another 115 ns tracking is required before the analog-to-digital converter is ready for another trigger. See Figure 11.

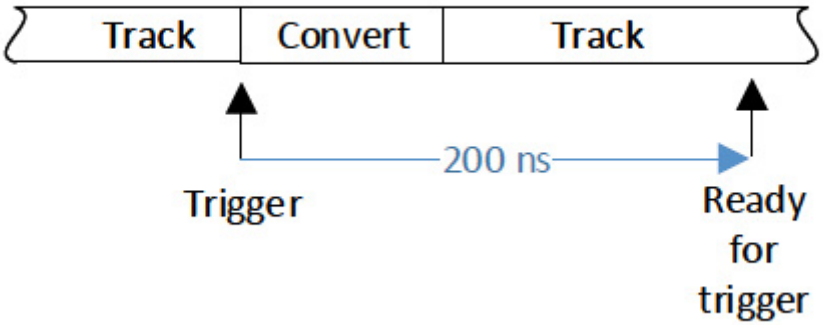

iei191.png

Figure 11. Digitize Track and Convert Timing

The Digitize Aperture is defined as the time difference between the occurrence of the trigger and time when the tracking value is held. The default is 0 ns, which means the analog value is held at 0 ns the time the trigger occurs. (In actuality, there are latencies in the circuit, up to 10 ns.) The entire process for one reading is 200 ns, which gives a maximum Digitize trigger rate of 5 MHz. Aperture settings other than 0 ns uses an averaging algorithm. A 200 ns Aperture setting, for example, averages two samples taken 200 ns apart. In this case, it takes an additional 200 ns to process the data, giving an acquisition period of 200 ns + 200 ns, or 400 ns. Examples of different Aperture settings and sample values are shown in Figure 12.

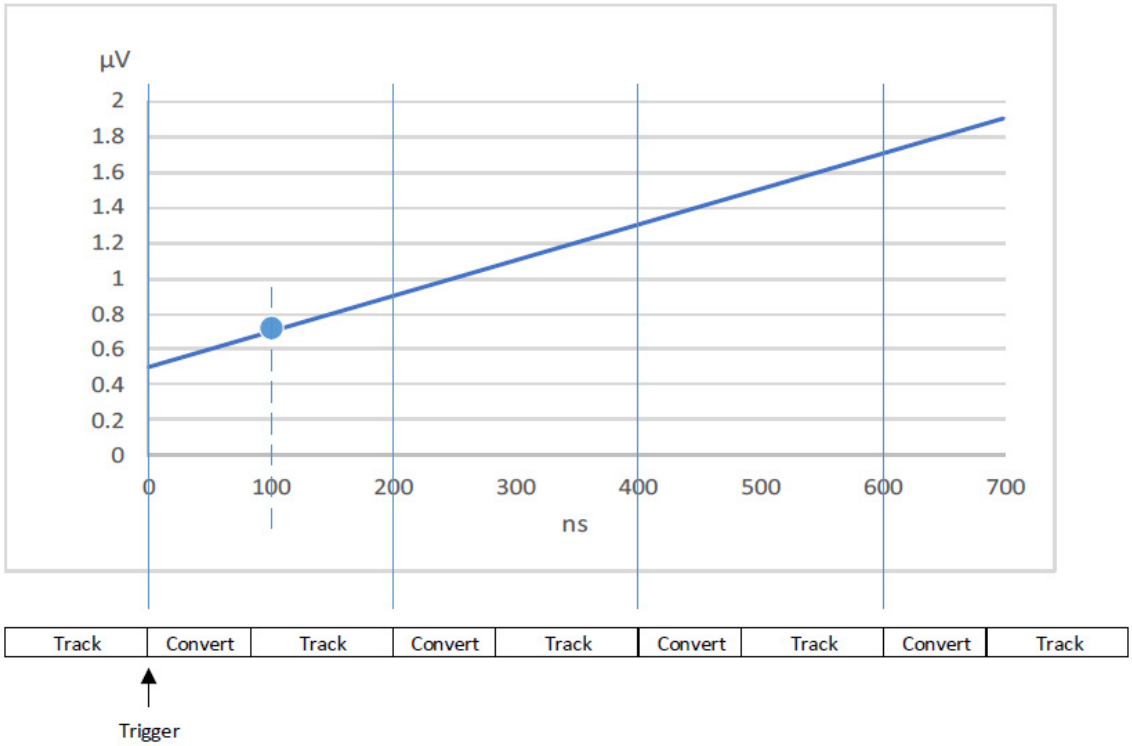

iei190.png

This figure shows a changing signal level (0.5 µV to 1.9 µV) vs time. If the Aperture is set to 0 ns, the sample value is 0.5 µV and the sample was captured at the time of the trigger. If the Aperture is set to 200 ns, the sample value is (0.5 µV + 0.9 µV)/2 or 0.7 µV, which is 200/2 or 100 ns after the trigger. If the Aperture is set to 400 ns, the sample value is (0.5 + 0.9 + 1.3)/3 or 0.9 µV, which is 400/2 or 200 ns after the trigger. If the Aperture is set to 600 ns, the sample value is (0.5 + 0.9 + 1.3 + 1.7)/4 or 1.1 µV, which is 600/2 or 300 ns after the trigger.

Figure 12. Aperture Settings and Sample Values

Digitize Menu

Push DIGITIZE to access the Digitize menu. All of the parameters on the screen are informational and are set with the digitize softkeys and TRIG SETUP . See the screen below:

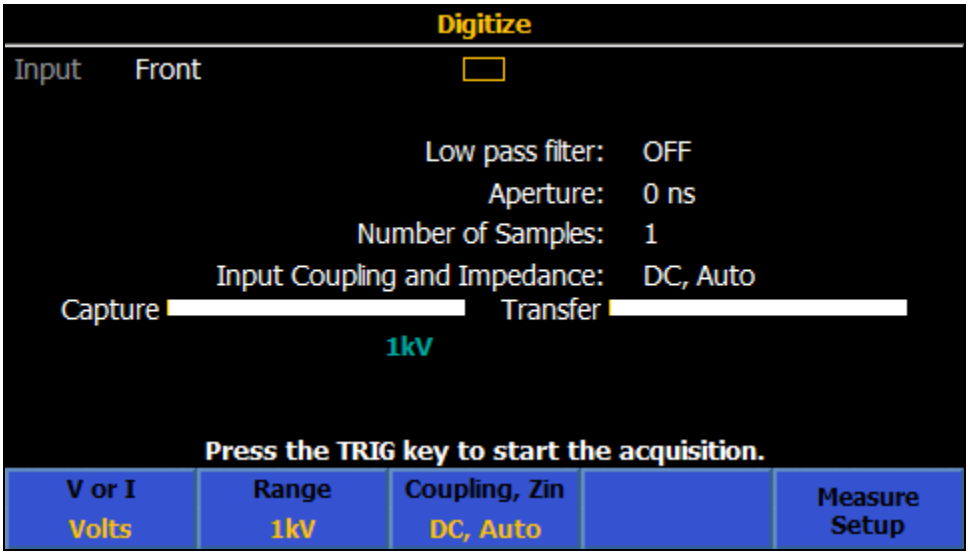

iei032.png

Number of Samples is a key parameter to change when you use Digitize. The default is 1, and is changed through the Trigger Setup menus. In most applications, change Number of Samples by setting the Triggers/Arm (Count) in the Trigger Setup menu. There may be situations that require setting the count in the other two trigger layers, Arm2 and Arm1 to values other than 1. If the other layers are changed, the Number of Samples in Digitize is the product of all the count settings in each trigger layer. For example, setting the Trigger layer Triggers/Arm (Count) to 3 and the Arm2 Count to 1e6 gives a Number of Samples of 3e6. The maximum Number of Samples is 10e6 with Time Stamps Off, and 5e6 with Time Stamps On.

Digitize has these softkeys:

F1 (**V or I**): Selects the voltage or current signal path. Volts uses the HI and LO terminals. Amps uses the A and LO terminals.

F2 (**Range**): Selects the range of the signal path. Voltage ranges are 100 mV, 1 V, 10 V, 100 V, and 1 kV. Current ranges are 10 µA, 100 µA, 1 mA, 10 mA, 100 mA, 1 A, 10 A, and 30 A (8588A only) from the front inputs. If the rear inputs are used, the 10 A and 30 A ranges are not available.

F3 (**Coupling, Zin**): For volts, selects the input coupling and input impedance. Available choices are DC, Auto; DC, 1 MΩ; DC, 10 MΩ; AC, 1 MΩ; and AC 10 MΩ. For Amps, F3 selects the input coupling, either DC, Auto; or AC, Auto. There may be specification differences based on the input coupling and impedance. See *Specifications*.

F5 (**Measure Setup**): A 100 kHz or 3 MHz low pass filter or Filter Off can be selected and the aperture is set in this setup menu. The low pass filter is inserted after the signal conditioning and before the high-speed analog-to-digital converter. The default is 3 MHz. The aperture of the analog-to-digital converter has a default of 0 ns, so the analog-to-digital converter digitizes the input at the time of the trigger. The entire process for one reading is 200 ns, which gives a maximum trigger rate of 5 MHz. The aperture can be set from 0 ns to 3 ms in 200 ns increments up to 1 ms, and 100 µs increments from 1 ms to 3 ms.

Digitizing Examples

1) This simple example captures 1 000 000 readings and then shows the resulting signal using Analyze. From a power-on default state:
    1. Push DIGITIZE.
    2. Select the 10 V range with the F3 (**Range**) softkey.
    3. Push TRIG SETUP and set Triggers/Arm (Count) to 1000000.
    4. Push BACK to return to the Digitize menu.
    5. Apply a 10 V, 10 Hz sinewave signal to the input.
    6. Push TRIG to capture the signal.
    7. Push ANALYZE to see two cycles of the captured signal.
2) Capture 10 000 samples of a 10 Vrms 10 kHz signal with at least 0.01 % accuracy:

    Considering the Nyquist theory for post process transformation of data into the Frequency domain, you need to sample at least twice the frequency of the signal, you should set the sample rate to 20 kHz or higher. Referring to the Product specifications, 50 kHz meets the accuracy requirement and is faster than twice the signal, so this is a good choice. See *Specifications*. To set the Trigger subsystem, push (TRIG SETUP). You can indirectly set the sample rate with the Trigger subsystem TIMER. If the TIMER interval is longer than other delay settings in the Trigger subsystem, the trigger rate is the reciprocal of the TIMER interval. The aperture time should be less than the sample period to avoid “trigger too fast” errors. "Trigger too fast" errors can result in an unexpected number of readings that different from the trigger count setting. In this example, set the aperture period to 10 µs, ½ the period of 50 kHz. Aperture is set with F5 (**Measure Setup**) in the Digitize top menu. See Table 11.

Table 11. Digitize Example 2

Action	Comment
Push DIGITIZE	Aborts any current trigger cycle. Trigger subsystem placed in the Idle state, INIT:CONT OFF.
If not already in voltage mode, push F1 (**V or I**) to select Voltage.	
Push F2 (**Range**) and select the **10V** range.	
Push F5 (**Measure Setup**) and set a 10 µs aperture and the low pass filter to OFF.	Aperture selection is a compromise between noise and bandwidth, which affect the overall accuracy. The input signal is averaged during the sample time. If the magnitude of the signal changes during the aperture a magnitude error results. While noise increases as aperture decreases, magnitude error decreases. The Aperture time should be less than the sample period to avoid trigger too fast errors.
Push F3 (**Coupling, Zin**) and select the required input coupling and impedance.	For voltage ranges ≤10V, use DC, Auto. For the 100V and 1000V ranges, use DC, 1M for best performance.
Connect the signal to be sampled to the active input terminals.	Done at this point to provide time for the signal conditioning circuits to stabilize.
Push TRIG SETUP	
Push F1 (**Reset to Defaults**) to reset the Trigger subsystem to the default settings	The default settings pertinent to this example are ARM2:SOURce IMM ARM2:COUNT 1 ARM2:ECOUNT 1 ARM1:SOURce IMM ARM1:COUNT 1 ARM1:ECOUNT 1

Table 11. Digitize Example 2 (cont.)

Action	Comment
Use the navigation keys and push SELECT to set the first row, trigger event, to **Timer**. Push BACK to return to the top of the Trigger Setup menu and ensure that the **Trigger Event** is set to **Timer**.	
Use the navigation keys to move to the second row labeled Timer, and set the Timer to 20 µS.	The sample rate is equal to 1/Timer, or 50 kHz
Push BACK to return to the top of the Trigger Setup menu.	
Select Triggers / Arm (Count) and set to 10,000.	Count determines the number of samples that will be taken. The count of 10 000 will cause 10 000 samples to trigger before the Trigger subsystem returns to the Idle state.
Set Delay to zero.	Setting Delay to zero ensures that if Delay and Holdoff settings add to more than the trigger period, they would cause the trigger rate to be slower than 1/Timer.
Set Holdoff to 0 s.	The holdoff period occurs after the acquisition starts but if longer than the trigger interval, it causes the trigger rate to be slower than 1/Timer.
Push BACK twice	Returns to the Digitize function.
Push TRIG to start the acquisition.	The Product captures 10,000 readings and saves data to memory.

When the capture and transfer bars turn from white to green the data has been captured and can be analyzed with ANALYZE or exported to an external memory device for analysis elsewhere. To export the data to a file, push MEM SETUP to access data transfer options. See the screen below:

iei033.png

3) Capture 4096 samples of a 1 Vrms, 4 kHz wave form with a 5 µs acquisition period and at a rate controlled by an external 10 kHz trigger wave form. See Table 12.

Table 12. Digitize Example 3

Action	Comment
Push DIGITIZE.	Aborts the current trigger cycle. Trigger subsystem placed in INIT:CONT OFF
If not already in voltage mode, push F1 (**V or I**) to select Voltage.	
Push F2 (**Range**) and select the 1 V range.	
Push F5 (**Measure Setup**) and set a 5 µs aperture and a low pass filter if required. When done, push BACK to return to the main Digitize menu.	Aperture selection is a compromise between noise and bandwidth. The input signal is averaged during the sample time. If the magnitude of the signal changes during the aperture a magnitude error will result. While noise increases as aperture decreases, magnitude error decreases. The Aperture time should be less than the sample period to avoid a/d acquisition errors.
Push F3 (**Coupling, Zin**) and select the required input coupling and impedance.	For voltage ranges 10 V or less, use DC, Auto. For the 100 V and 1000 V ranges, use DC, 1M for best performance.
Connect the signal to be sampled to the active input terminals.	This provides time for the signal conditioning circuits to stabilize.
Push TRIG SETUP.	
Push F1 to reset the Trigger subsystem to the default settings	The default settings pertinent to this example are ARM2:SOURce IMM ARM2:COUNT 1 ARM2:ECOUNT 1 ARM1:SOURce IMM ARM1:COUNT 1 ARM1:ECOUNT 1
Push SELECT to set the Trigger Event to External in the Trigger Setup menu.	

Table 12. Digitize Example 3 (cont.)

Action	Comment
Check that the second row shows the type and polarity of trigger edge required. If not, highlight row two and push SELECT to change the settings.	Default is TTL, Negative.
Push ▲ or ▼ to highlight the Triggers per arm (Count) setting and enter 4096.	The Trigger subsystem Arm 2 and Arm1 layer trigger events are automatically satisfied since they are set to their defaults, Immediate. The Trigger layer accepts 4096 external triggers before it returns to the Idle state.
Set Delay to zero.	Setting Delay to zero minimizes the delay (latency) between the trigger edge and start of the acquisition. This is important if the digitized data is used to determine the phase-angle relationship of the signal to the trigger.
Set Holdoff to zero.	Holdoff prevents Trigger Too Fast errors if the Trigger subsystem is free running without other delays. In this case, timing is controlled by an external signal so Holdoff should be set to zero.
Push DIGITIZE once or BACK twice	Returns to the Digitize function
Connect the trigger signal to the BNC connector on the rear panel.	The system is now ready to begin data capture
Push TRIG to start the acquisition.	The Product captures 4,096 readings and saves data to memory.

When the progress bar has turned from white to green the data has been captured and can be analyzed using ANALYZE or exported to an external device for analysis elsewhere. Push MEM SETUP to access data transfer options. See the screen in *Digitizing Examples*.

More

Push MORE to access these functions:

- F1 (**Capacitance**)
- F2 (**RF Power**)
- F3 (**Frequency**)
- F4 (**DCI Ext Shunt**)
- F5 (**More**) opens these additional functions:
  - F2 (**ACI Ext Shunt**)
  - F3 (**PRT**)
  - F4 (**Thermocouple**)

Note

After you push F5 (**More**)*, DCI Ext Shunt is made available by* F1*. Push* F5 (**More**) *additional times to cycle the choices again starting with* F1 (**Capacitance**)*.*

Capacitance (8588A only)

⚠Caution

To avoid possible damage to the Product or to the equipment under test, disconnect circuit power and discharge all high-voltage capacitors before you measure capacitance. Use the DC Voltage function to confirm that the capacitor is discharged.

Push MORE and then F1 (**Capacitance**) to use the Capacitance Measure function. This function provides 2-wire measurements that use the V INPUT HI and LO input terminals. With polarized capacitors, connect the positive side to LO and the negative side to HI (VΩ|) as shown in Figure 13.

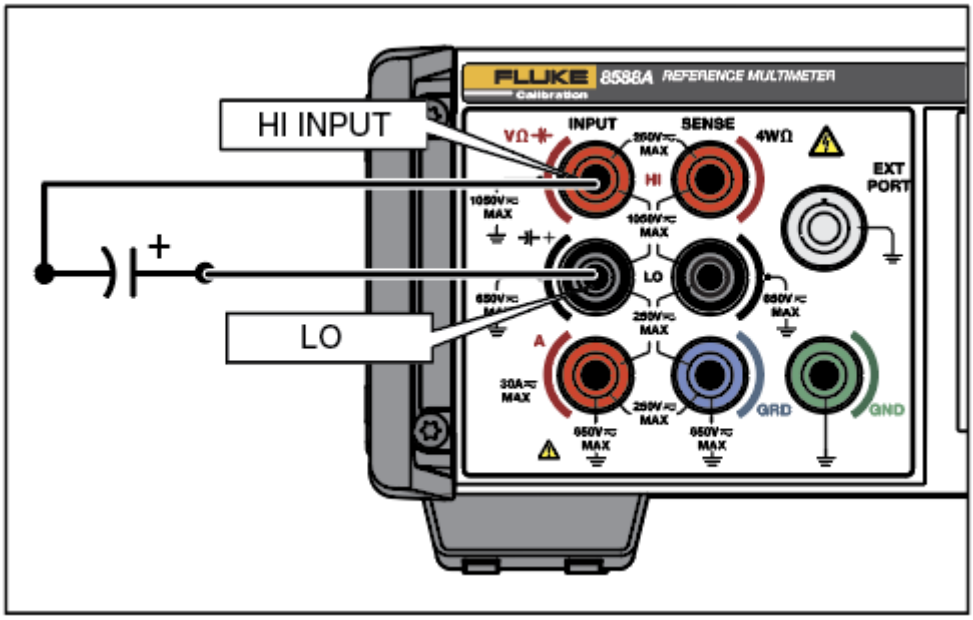

iei188.png

Figure 13. Connection for Capacitance

The ranges available are Auto, 1 nF, 10 nF, 100 nF, 1 µF, 10 µF, 100 µF, 1 mF, 10 mF, and 100 mF when using the Capacitance Normal I mode. The LoI mode is limited to Auto, 1 mF, 10 mF, and 100 mF ranges.

Capacitance Menu

This section explains the Capacitance menu.

F1 (**Range**): Each of the Capacitance ranges can be manually selected or select Auto to put Capacitance into autorange. Make the range selection with the softkeys or use the navigational keys to highlight the selection and push SELECT. Push BACK to return to the start page of the menu.

F2 (**Resolution**): Capacitance has resolution 4 digits or 5 digits. Select the resolution with the softkeys or use the navigational keys to highlight the selection and push SELECT. Push BACK to return to the start page of the menu.

F3 (**LoI**): Two different current levels are available to make capacitance measurements. LoI OFF is the default, and makes measurements in all of the ranges (1 nF to 100 mF). LoI uses a lower stimulus current and is limited to three ranges (1 mF to 100 mF). LoI ON may be useful if the default current causes a calibrator's capacitance function to overload in these ranges. See *Specifications*.

Measure Capacitance

The Product uses a dc charge/discharge method to measure capacitance, based on the formula C = I dV/dt. One use for the Capacitance function is to measure the output of multi-function calibrators, for example the Fluke 5522A. Connect the Product INPUT HI to the calibrator OUTPUT HI and the Product INPUT LO to the calibrator OUTPUT LO. With polarized capacitors, connect the positive side to LO and the negative side to HI (VΩ|) as shown above in Figure 14. Capacitance is a 2-wire measurement and the Product reading includes the capacitance of the connecting leads. Compensate for the connecting leads by using the Zero function. To do so, connect one end of the connecting leads to the Product, and the other end to an open circuit on a non-conducting work surface. Push ZERO and select F1 (**Zero Range**) or F2 (**Zero Function**) as appropriate. The Zero function can accommodate approximately 200 pF of lead capacitance so Fluke Calibration recommends the use of short, low capacitance connecting leads. The standard lead set capacitance is less than 200 pF so this will be adequate.

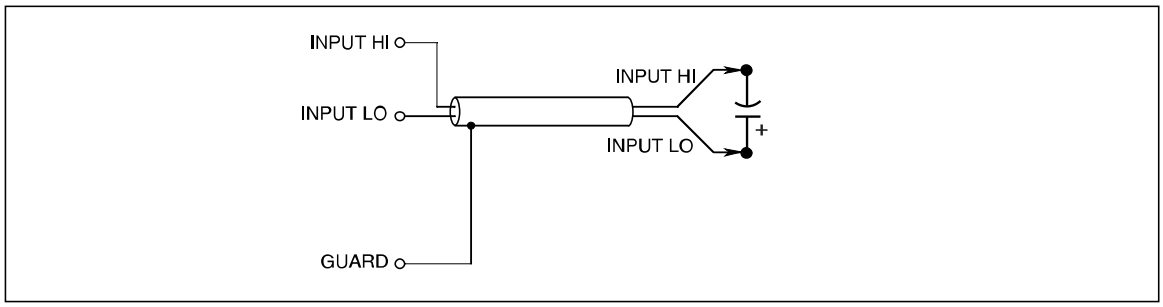

lei340.emf

Figure 14. Capacitance Measurements Connection

The standard lead set can be used for most capacitance measurements.

RF Power (8588A only)

An RF power sensor can be connected to the Product **EXT PORT** to make RF power measurements.

Instructions to connect a power sensor to the Product and to a DUT are given below. Do not make connections before you read all of the Cautions contained in these instructions.

⚠Caution

To prevent equipment damage, follow the instructions below before you connect the power sensor to the Product or a Device Under Test (DUT).

⚠Caution

The optional power sensor(s) contain components which can be destroyed by electrostatic discharges. To prevent this, never touch the sensor RF connector inner conductor and never open the sensor. Never exceed the sensor maximum RF power limit. Even brief overloads can destroy the sensor.

⚠Caution

The Product front-panel Power Sensor connector interface is only for use with compatible power sensors. To prevent damage to the Product, no other connection is permitted.

Fluke Calibration supplies a NRP type sensor as an option.

RF Power Menu

Push MORE and then F2 (**RF Power**) to enable the RF Power function. If a RF sensor is not connected, a connection message at the bottom of the screen prompts you to do so. This section explains the RF Power menu. See the screen below:

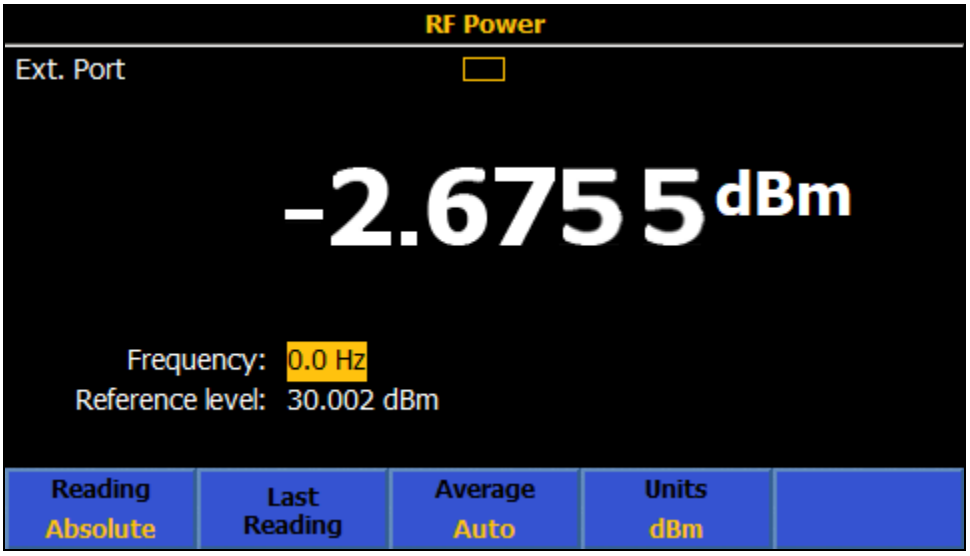

iei034.png

When a compatible sensor is plugged into **EXT PORT**, the top of the RF Power menu shows the sensor type and serial number. The lower part of the screen has two parameters that can be changed with the navigation keys and numeric keypad:

Frequency: Power readings are based on the frequency of the signal to be measured. After the sensor is plugged in, frequency is set to a default of 50 MHz. Use the navigation keys or the numeric keypad to change the frequency in that field. The allowable frequency values are determined by the connected sensor and generally include 0 Hz.

Reference level: Use the reference level to make relative measurements. The power-on default is -99 dBm. To change the reference level, use the navigation keys to highlight and select Reference level. The range of reference level is 99 dBm to -99 dBm. When other units are selected, the reference level range is shown in Table 13. The reference level can also be set by pushing F2 (**Last Reading**).

Table 13. Setting Limits for Reference Level Units

Parameter	Min	Max
dBm	-99	+99
Watts	100.03 fW	9.9997 MW
Vrms	2.2364 µV rms	22.358 kVrms
Vpk-pk	6.326 µVpk-pk	63.24 kVpk-pk
dBµV	-6.991 dBµV	206.988 dBV

RF Power Softkeys

This section explains the RF Power softkeys.

F1 (**Reading**): Chooses between Absolute or Relative**.** The default is Absolute. Relative shows measurements relative to the reference level. In relative, the displayed reading is the absolute reading minus the reference level.

F2 (**Last Reading**): Pushing **F2** sets the reference level to the reading that is currently displayed. The Last Reading feature is useful to check the flatness of a generator relative to a reference frequency output. **F2** works the same way in both absolute and relative modes, that is, it takes whatever is displayed and makes that the reference level.

F3 (**Average**): Determines the averaging factor applied by the RF power sensor. When set to Auto, the power sensor continuously determines the averaging factor which depends on the power level with a maximum settling time of 4 seconds for the sensor's averaging filter. Alternatively, a specific averaging factor value between 1 and 32768 in a 2_n sequence may be selected. Use the navigation keys to select the averaging factor.

Use the cursor keys or the softkeys to choose:

- Auto
- 1
- 2
- 4
- 8
- 16
- 32
- 64
- 128
- 256
- 512
- 1024
- 2048
- 4096
- 8192
- 16384
- 32768

F4 (**Units**): Readings with these units: dBm, Watts, Vrms, Vp-p and dBµV. The units are changed with the navigation keys or corresponding softkeys. The default unit is dBm. The Product keeps the last units used until the Product is powered off.

Note

Display of readout values in linear units of watts or volts may use W, mW, µW or V, mV, or µV depending on the measured value.

Connect a Power Sensor to the Product

To connect the power sensor interface cable multiway connector to the Product:

1. Remove the plastic cap from the cable-end connector and save it for future use.
2. Connect the multiway connector to the EXT PORT on the Product. Push firmly on the multiway connector until it latches. See Figure 15.

The presence of a sensor at the Ext. Port is automatically detected. Only compatible sensor models are recognized. There may be a slight delay between the connector insertion and completion of the automatic detection process.

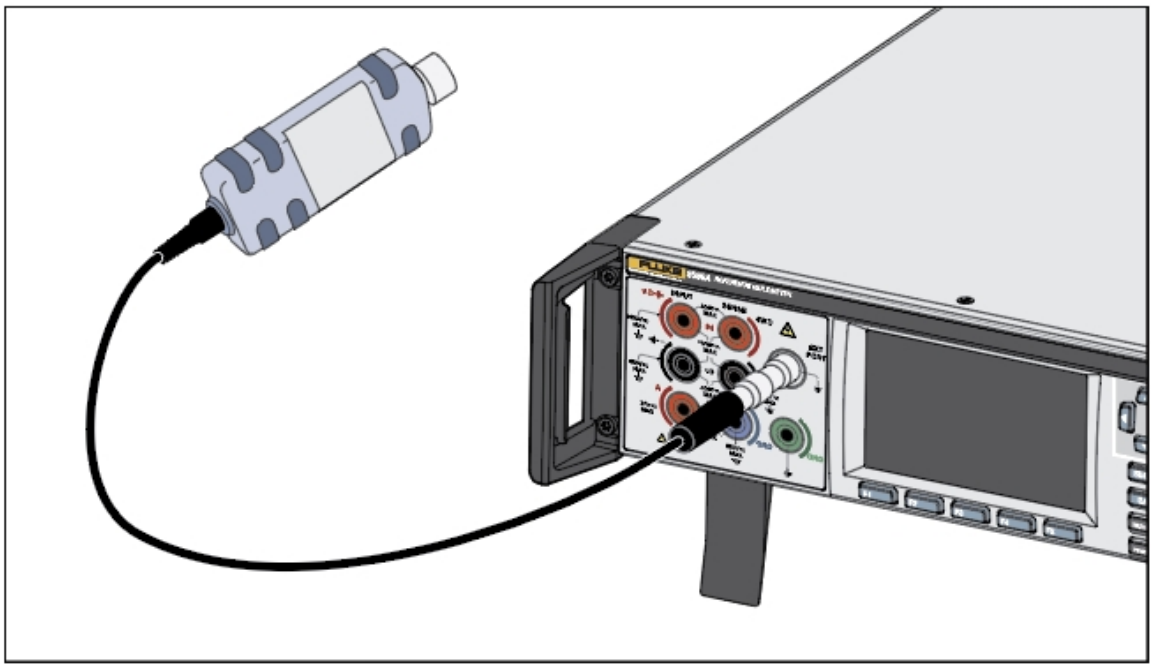

iei337.jpg

Figure 15. Connect a Power Sensor to the Product

Connect a Power Sensor to a Unit Under Test

⚠Caution

To prevent damage to the Product:

- **Never exceed the maximum RF power limit. Even brief overloads can destroy the sensor. See *Specifications*.**
- **Do not touch the RF connector inner conductor. The power sensor contains components which can be destroyed by electrostatic discharges.**

To connect a power sensor to a DUT:

1. Remove the plastic protection cap from the sensor RF input connector and save it for future use.
2. Ensure the DUT output is either OFF or at a safe RF level, and then connect the sensor RF input connector to the output of the DUT.
3. For a NRP sensor fitted with a 2.92 mm RF connector, torque the connector to 0.49 Nm (4 in-lb) with a torque wrench. If another compatible sensor with a different RF connector type is used, tighten to a torque appropriate for that type of connector.

Note

The NRP power sensors have a type of ball-bearing RF connector. The friction with this design is considerably less than with conventional RF connectors, and a repeatable connection is ensured even at relatively low torques. When tightened to the correct torque, the sensor body may still rotate. Do not try to prevent this by increasing the torque above the permissible value or by attempting to tighten the connection by turning the sensor body.

Set the Measurement Frequency

For valid measurements, the frequency setting must correspond to the frequency of the signal to be measured. To set the frequency, use the navigation keys to select that field. Enter the frequency with the numeric keypad. The allowable frequency values are determined by the connected sensor and generally include 0 Hz.

Frequency Counter

From the More menu, push **F3** (**Frequency**) to use the Frequency Counter measuring function. The Frequency Counter measuring function defaults to using the rear panel BNC connector to make frequency measurements. The input is selected using **F5** (**Measure Setup**). When in ACV, the V INPUT HI and LO terminals are used to measure frequency of an ACV signal, and the rear BNC is de-selected. When in ACI, the A INPUT HI and LO terminals are used to measure frequency of an ACI signal, and the rear BNC is de-selected.

The default Frequency Counter measuring screen is shown below. The input field shows which connector is selected to measure the input signal. The lower status field shows coupling (ac or dc) and the counter gate time (100 µs to 1 s). See the screen below:

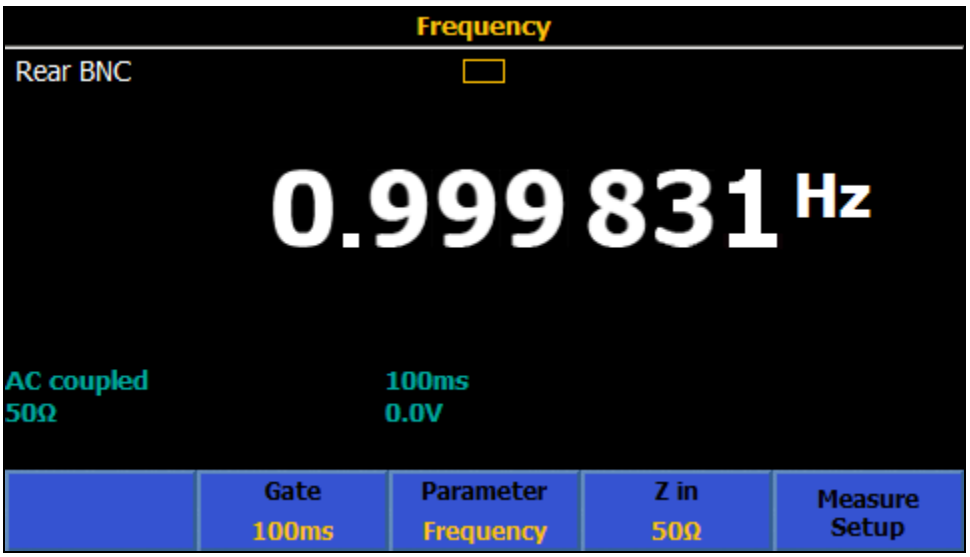

iei011.png

Frequency Counter Menu

This section explains the Frequency Counter menus when the rear BNC is selected.

F2 (**Gate**): selects the counter gate time: 100 µs, 1 ms, 10 ms, 100 ms, or 1 s. Use the navigation keys or the appropriate softkeys to select. The gate times affect the Counter resolution as shown in Table 14. In Frequency, gate times are not affected by the input channel or RMS filter settings in ACV or ACI. When you use frequency as a secondary reading, gate times are affected by the RMS filter settings in ACV or ACI. See *ACV Menu* and *ACI Menu*.

Table 14. Equivalent Resolution/Gate Setting

Counter Display Resolution	Counter Gate
8 digits	1 s
7 digits	100 ms
6 digits	10 ms
5 digits	1 ms
4 digits	100 µs

F3 (**Parameter**): Allows display of either frequency (default) or period.

F4 (**Z in**): Allows selection of either 50 Ω (default) or High impedance (10 kΩ).

F5 (**Measure Setup**): Shows the screen below:

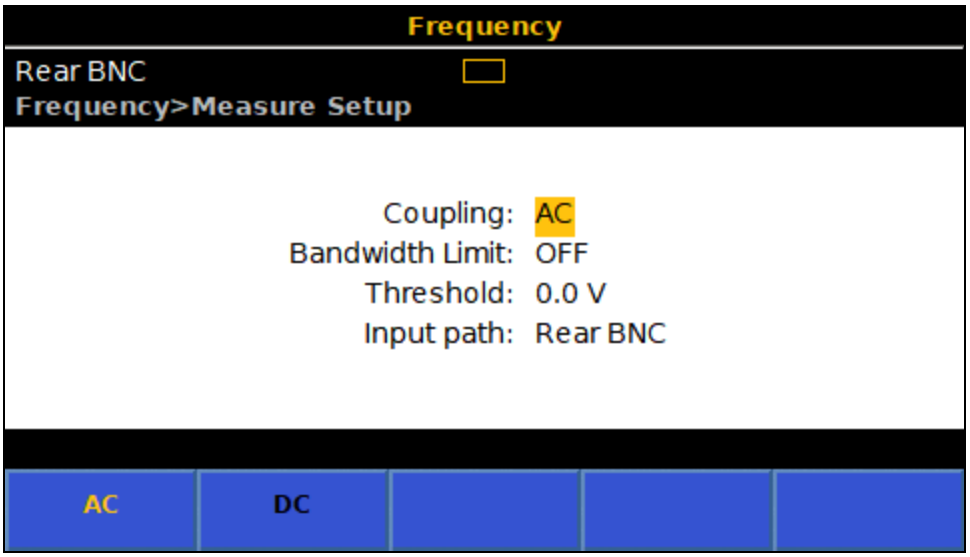

iei012.png

Coupling: Sets the input path to either **F1** (**AC**) (default) or **F2** (**DC**).

Bandwidth Limit: Can be set to **F1** (**ON**) or **F2** (**OFF**). When Zin is set to 50 Ω, with Bandwidth Limit ON, the bandwidth (-3 dB) is 1.5 MHz. When Zin is set to High, with Bandwidth Limit ON, the bandwidth (-3 dB) is 1 MHz. The bandwidth (-3dB) is 100 MHz, with Bandwidth Limit OFF and Zin set to 50 Ω. With Zin set to High, and using an external in-line terminator on the rear BNC Freq IN, the bandwidth is also 100 MHz.

Threshold: Can be set to -5 V to +5 V with 0.1 V setting resolution when the BNC input is selected. Default is 0.0 V.

Input path: Use to select the frequency counter input path. The choices are:

F1 (**Rear BNC**): When you use the Rear BNC input, the minimum frequency for any given gate time is four times higher than expected. For example, a 1 s gate time has a minimum frequency measurement of 4 Hz.

F2 (**ACV Signal**): Uses the V INPUT HI and LO terminals.

F3 (**ACI Signal**): Uses the A INPUT HI and LO terminals. Selecting F2 (**ACV Signal**) or F3 (**ACI Signal**) changes the main Frequency screen to that shown below. This screen has an additional softkey, F1 (**Range**). There is no autorange for ACV and ACI signals. Only discrete voltage or current ranges can be selected. The available ACV ranges are 10 mV, 100 mV, 1 V, 10 V, 100 V and 1 kV. The available ACI ranges are Auto, 10 µA, 100 µA, 1 mA, 10 mA, 100 mA, 1 A, 10 A, and 30 A. See the screen below.

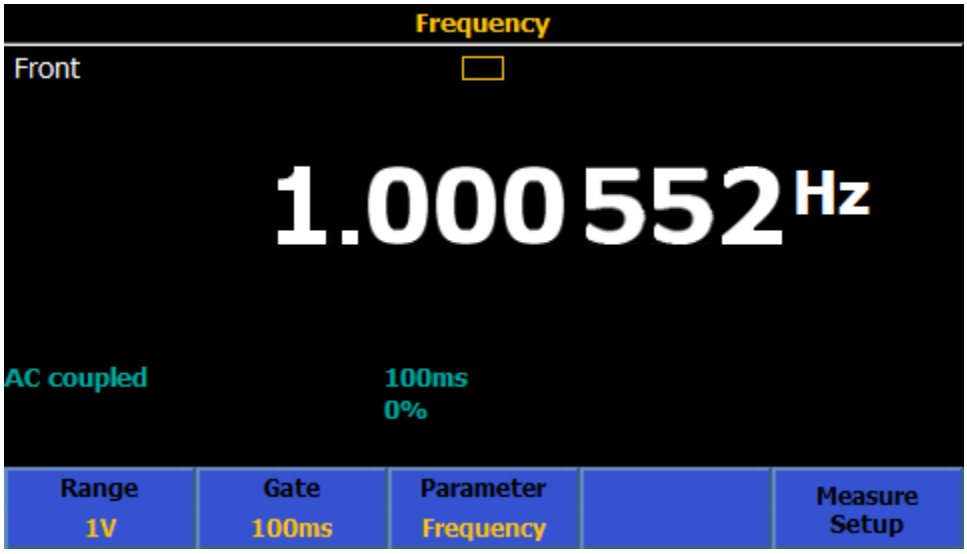

iei035.png

Measure Frequency

When Frequency is measured with the rear BNC connector, use shielded coaxial leads. See Figure 16.

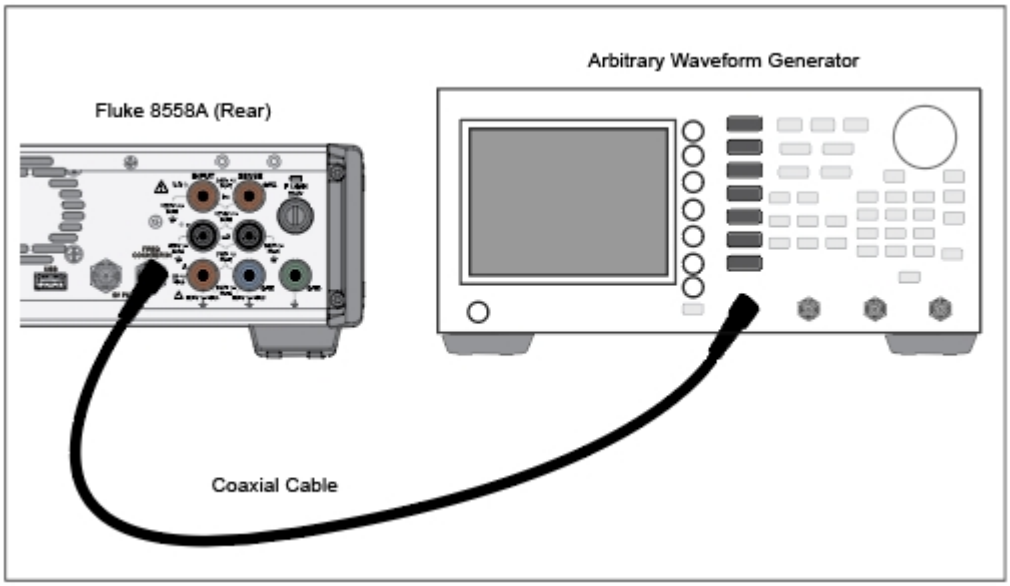

iei341.jpg

Figure 16. Frequency Measurement with Rear Input

When measuring frequency using the V INPUT HI and LO terminals, use the same leads that you use in ACV. See *AC Voltage*. When you measure frequency using the A INPUT HI and LO terminals, use the same leads that you use in ACI. See *AC Current*.

DCI Ext Shunt (8588A Only)

The DCI Ext Shunt function measures the dc voltage across the shunt and shows the calculated current, taking into account specific characteristics of the external shunt. Push MORE then F4 (**DCI Ext Shunt**) to use the DCI Ext Shunt function. With DCI Ext Shunt, the Product is used with an external dc current shunt to measure current. The voltage can be shown as a secondary reading. DCI Ext Shunt is used to augment the measurement capability of the Product and to calibrate current shunts themselves.

The default external shunt is the Basic and allows quick setup. This shunt always appears at the top of the list of shunt data with asset number and manufacturer both represented by "---". Maximum current and resistance value are the only editable fields for the default basic shunt. See the screen below, which shows the shunt information line above the calculated current reading:

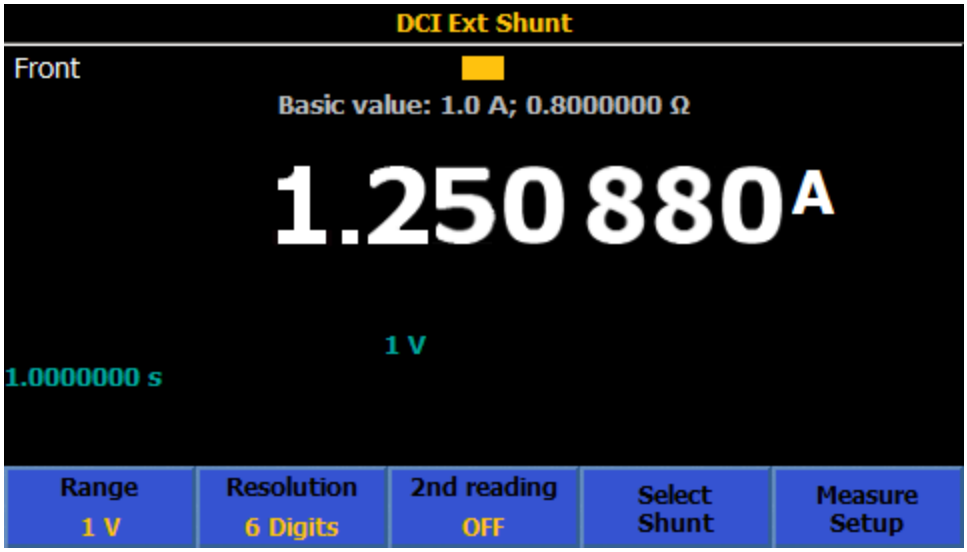

iei013.png

DCI Ext Shunt Menu

This section explains the DCI Ext Shunt menu.

F4 (**Range**): Allows selection of the Auto, 100 mV, 1 V, or 10 V dc ranges. Auto will autorange between those ranges depending upon input. The input impedance is 10 MΩ. The internal firmware of the Product calculates and corrects for shunt loading based on the 10 MΩ input impedance if Shunt Corrections is set to ON under Measure Setup.

F2 (**Resolution**): The default resolution is 6 Digits. Other choices available are 4, 5, and 7 Digits.

F3 (**2nd Reading**): The actual dc voltage or additional Power Uncertainty can be shown as the secondary reading. Secondary reading is not shown if OFF is selected. Power Uncertainty is the symmetrical uncertainty due to the self-heating of the shunt based on the current applied and power reference level setting for the external shunt. See *Calculation of the Power Uncertainty*.

F4 (**Select Shunt**): This menu opens a number of other menus that provide access to specific current shunts and their characteristics.

F5 (**Measure Setup**): Aperture/PLC sets the integration time of the A to D converter using the navigational keys, much like Measure Setup in DCV. The choices are:

- Auto
- Auto Fast
- Manual

When you select Manual, use the softkeys and the numerical keypad to edit the integration time by PLC and Time. The smallest time aperture is 0 seconds with 200 ns increments and has an upper time limit of 10 seconds. The smallest aperture that can be set by PLC is 0.01. The upper limit is the PLC equivalent of 10 seconds and is determined by the line frequency setting in the Instrument Setup menu.

Shunt Corrections: When set to ON (Power-on default), the calculated current reading is based on the external shunt value and the shunt loading from the 10 Mohm input impedance of the Product. Note that if set to OFF, an Instrument reset (**Instrument Setup > Reset Instrument**) retains the OFF setting. If the Product is power cycled, Shunt Corrections is always set to ON.

Select Shunt Submenu

The section explains the Select Shunt submenu.

F1 (**Page Down**) and F2 (**Page Up**): Allows you to scroll through all of the current shunts stored in the Product.

F3 (**Sort By**): Allows you to sort by Asset number, Serial number or Max A. Push F3 to cycle through the three choices. Note that the Basic shunt is always at the top.

F4 (**Delete Shunt**): Allows you to delete the selected shunt (indicated by the darkened circle on the left). A user prompt shows before actual deletion.

F5 (**Manage Shunts**): Allows you to edit specific characteristics of the shunt as well as adding a new shunt.

Manage Shunts Submenu

The Manage Shunts submenu is explained in this section. Enter the appropriate information for each of these fields with the navigation keys and numeric keypad.

- **Asset number** (shown as the first field on the shunt information line of the main DCI Ext Shunt screen)
- **Manufacturer** (displayed as the second field on the shunt information line)
- **Model**
- **Serial Number**
- **Resistance value**: Use the numeric keypad and ENTER to input the resistance value of the shunt, for example from the most recent calibration certificate. Resistance value is shown as the fourth field in the shunt information line.

- **Maximum current**: Use the numeric keypad and ENTER to input the maximum current that can be applied to the shunt without causing a resistance value change. Maximum current is displayed as the third field in the shunt information line.
- **Power ref. level**: Enter the current level used when calibrating the shunt resistance value.
- **Power coefficient**: Enter the power coefficient of the shunt, in µA/A.

The Power ref level and Power coefficient entries are used to calculate the additional uncertainty of the displayed current due to self-heating of the shunt. The Power uncertainty is shown as an integer value between 0 µA/A and 999,999 µA/A, and does not affect the calculated current. See the screen below.

Calculation of the Power Uncertainty

Power uncertainty = Power coefficient x { 1 - (Measured current/Power ref level)^2 }

See the screen below:

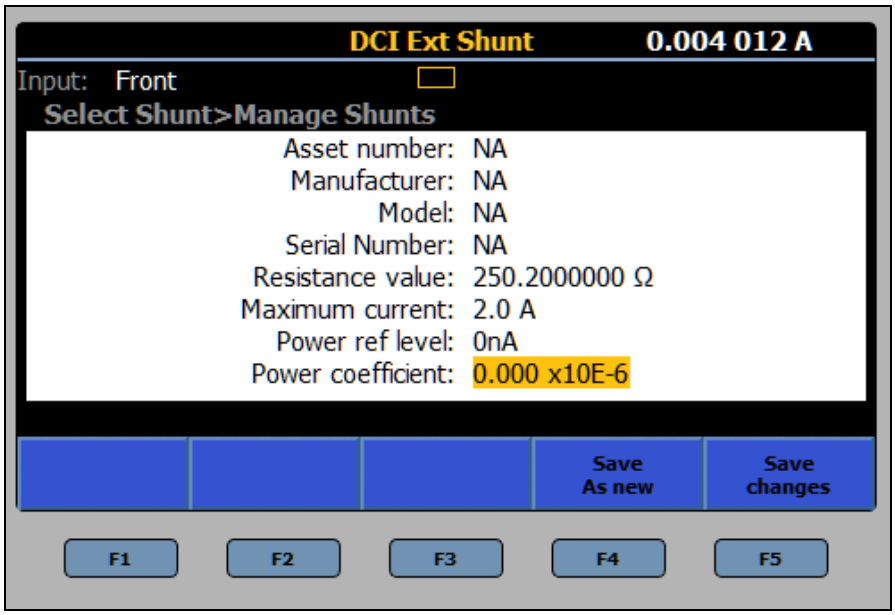

iei014.png

Push F4 (**Save as new**) to save as a new DCI Ext Shunt, or push F5 to save as changes to the existing shunt.

Measure DC Current with DCI Ext Shunt

The DCI Ext Shunt function provides a calculated current reading for a specified current shunt by measuring the voltage across the shunt. If Shunt Corrections are OFF, the displayed current is calculated from I = V/R where R is the resistance of the shunt. If Corrections are ON, the displayed current is calculated using the parallel resistance of the shunt and the 10 MΩ input impedance of the DCI Ext Shunt function. Connections are straightforward, as shown in Figure 17.

Similar connection considerations are required for connecting the external shunt input terminals as for dc current measurement. Use shielded twisted-pair cable to reduce induced interference signals, and connect GUARD to the source of common-mode voltage to provide a separate common-mode current path. To connect the external shunt sense terminals to the Product, use low thermal leads as in DCV.

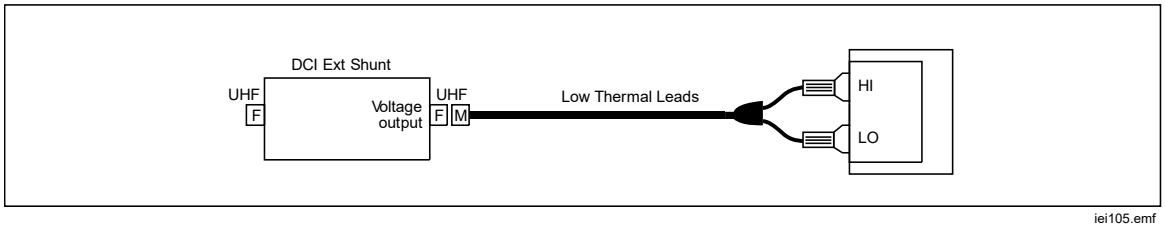

Figure 17. External DC Shunt Connection

ACI Ext Shunt (8588A Only)

The ACI Ext Shunt function measures the ac voltage across the shunt and shows the calculated current, taking into account specific characteristics of the external shunt. Push MORE, F5 (**More**), and then F2 (**ACI Ext Shunt**) to use the ACI Ext Shunt function. With ACI Ext Shunt, the Product is used with an external ac current shunt. If Shunt Corrections are OFF (under F5 (**Measure Setup**)), the displayed current is calculated from I = V/R where R is the resistance of the shunt. If Shunt Corrections are ON, the displayed current is calculated taking into account the shunt AC-DC difference and the input impedance of the ACI Ext Shunt function. The voltage can also be shown as a secondary reading. ACI Ext Shunt augments the current measurement capability of the Product and is used to calibrate current shunts themselves.

ACI Ext Shunt Menu

The section explains the ACI Ext Shunt menu.

F1 (**Range**): Allows selection of the Auto, 10 mV, 100 mV, 1 V, or 10 V ac ranges. Auto autoranges between those ranges depending upon the input. The input impedance is 10M Ohm in parallel with 80 pF. The internal firmware of the Product calculates and corrects for shunt loading based on the 10 MΩ / 80 pF input impedance if Shunt Correction is set to ON.

F2 (**Resolution**): The default resolution is 6 Digits. Other choices available are 4, 5, and 7 Digits.

F3 (**RMS Filter**): Push to select various filters for the rms converter, allowing measurements down to the chosen filter frequency without degradation of accuracy and excessive reading variation. One of the filters is always in circuit. The 40 Hz filter is the default selection at power on. The filter choices available are 0.1 Hz, 1 Hz, 10 Hz, 40 Hz, 100 Hz, and 1 kHz. The filter setting determines the reading rate in ACI. See *Specifications*. Use the softkeys or the navigational keys to highlight the selection and then push SELECT. Push BACK to return the Product to the previous menu.

F4 (**Select Shunt**): This menu opens up a number of submenus that provide access to specific current shunts and their characteristics. (**Measure Setup**) of the ACI Ext Shunt menu provides access to a menu that allows you to change how measurements are made and what is displayed. See *ACI Ext Shunt Measure Setup Menu*.

Select Shunt Submenu

The section explains the Ext Shunt submenu.

F1 (**Page Down**) and F2 (**Page Up**): Allows you to scroll through all of the current shunts stored in the Product.

F3 (**Sort by**): Allows you to sort by Asset number, Serial number or Max A. Push F3 to cycle through the choices.

F4 (**Delete Shunt**): Allows you to delete the selected shunt (indicated by the darkened circle on the left). A confirmation prompt appears before actual deletion.

F5 (**Manage Shunts**): Allows you to edit specific characteristic of the shunt, as well as adding a new shunt.

Manage Shunts Submenu

The section explains the Manage Shunts submenu, which is similar to the DCI Ext Shunt submenu mentioned previously.

Push F3 (**Edit AC-DC Differences**) to open a menu to enter ac-dc differences of the current shunt. When using Fluke A40B current shunts, enter the ac-dc differences at each of the frequency points from the calibration certificate of the respective shunt. When Shunt Corrections is set to ON (under F5 (**Measure Setup**)), the calculated current reading is corrected using a linear interpolation of the ac-differences based on frequency. See the screen below:

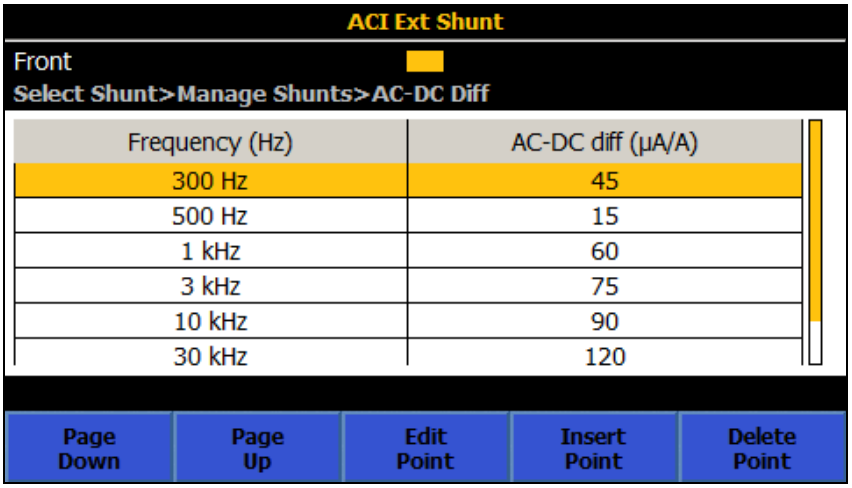

iei015.png

Enter the appropriate information for each of the fields listed with the navigation keys and numeric keypad.

- **Asset number** (shown as the first field on the shunt information line of the main DCI Ext Shunt screen)
- **Manufacturer**
- **Model** (shown as the second field on the shunt information line)
- **Serial Number**
- **Resistance value**: Use the numeric keypad and ENTER to input the resistance value of the shunt, for example from the most recent calibration certificate. Resistance value is displayed as the fourth field in the shunt information line.
- **Maximum current**: Use the numeric keypad and ENTER to input the maximum current that can be applied to the shunt without causing a resistance value change. Maximum current is displayed as the third field in the shunt information line.
- **Power ref. level**: Enter the current level used when calibrating the shunt resistance value.
- **Power coefficient**: Enter the power coefficient of the shunt, in µA/A.

The Power ref level and Power coefficient entries show the uncertainty of the displayed current due to self-heating of the shunt. The Power uncertainty is shown as an integer value between 0 µA/A and 999,999 µA/A, and does not affect the calculated current. See the screen below.

Calculation of the Power Uncertainty:

Power uncertainty = Power coefficient x {1 - (Measured current/Power ref level)^2 }

Push F4 to (**Save as new**) the ACI Ext Shunt, or push F5 (**Save changes**) to save the shunt changes. See the screen below:

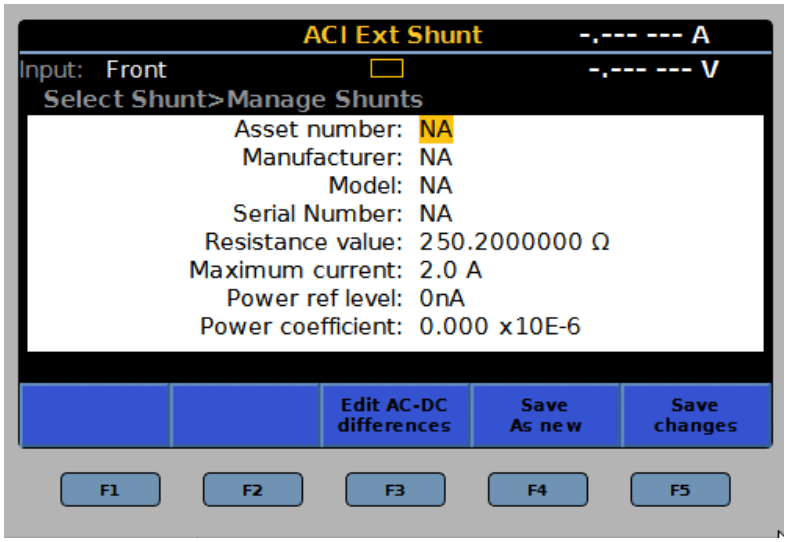

iei020.png

ACI Ext Shunt Measure Setup Menu

The section explains the ACI Ext Shunt F5 (**Measure Setup**) menu submenu.

- **Signal path coupling**: Choose F1 (**AC**) or F2 (**DC**).
- **Secondary Reading:** In the ACI function, a secondary reading can be shown. This menu choices are:
  - F1 (**Shunt Voltage**)
  - F2 (**Frequency**)
  - F3 (**Period**)
  - F4 (**Power Uncertainty**) Power uncertainty is based on the shunt input current level, the power reference level and power coefficient. Power uncertainty is the symmetrical uncertainty due to the self-heating of the shunt based on the input current level. See Calculation of the Power Uncertainty.
  - F5 (**More**) additional Secondary Reading parameters
    - F1 (**Pk to Pk**) (repeated for ease of use)
    - F2 (**Positive Peak**)
    - F3 (**Negative Peak**)
    - F4 (**Crest Factor**)
    - F5 (**More**) Shows:
      - F1 (**Positive Peak**) (repeated for ease of use)
      - F2 (**Negative Peak**)
      - F3 (**Crest Factor**)
      - F4 (**OFF)**
      - F5 (**More**) returns the to the top level of the Measure Setup menu.

  When Pk to Pk is selected, the Peak to peak method becomes active. (see below).
- **Frequency path coupling**: The frequency path coupling can be AC or DC if the signal path coupling (above) is set to DC. Otherwise, only AC is available.

- **Frequency path bandwidth limit**: Choose F1 (**OFF**) or F2 (**ON**). Reduces noise in the frequency counter signal path. If there is excessive noise observed, turn the bandwidth limit ON for signals <70 kHz.
- **Counter Gate**: Set to:
  - F1 (**Auto**)
  - F2 (**1 ms**)
  - F3 (**10 ms**)
  - F4 (**100 ms**)
  - F5 (**1 s**)
- **Peak to peak method**: This submenu is made active when the Secondary Reading is set to Pk to Pk.
  - F1 (**Measured**) shows the peak to peak as measured in ACI assuming no particular signal wave form.
  - F2 (**Sine**)
  - F3 (**Square**)
  - F4 (**Triangle**)
  - F5 (**Truncated Sine**)

F2 through F5 specify the signal wave form type that is measured, and calculates the peak to peak based on the rms value.

If set to:

- Sine, the peak to peak shown is 2 x (square root of 2) x rms.
- Square is 2 x rms
- Triangle is 2 x (square root of 3) x rms
- Truncated Sine is 4.618803 * rms

The Square, Triangle, and Truncated Sine selections are useful to measure the peak-to-peak output of multi-product calibrators like the Fluke 5522A which have these non-sine wave outputs. See the screen below:

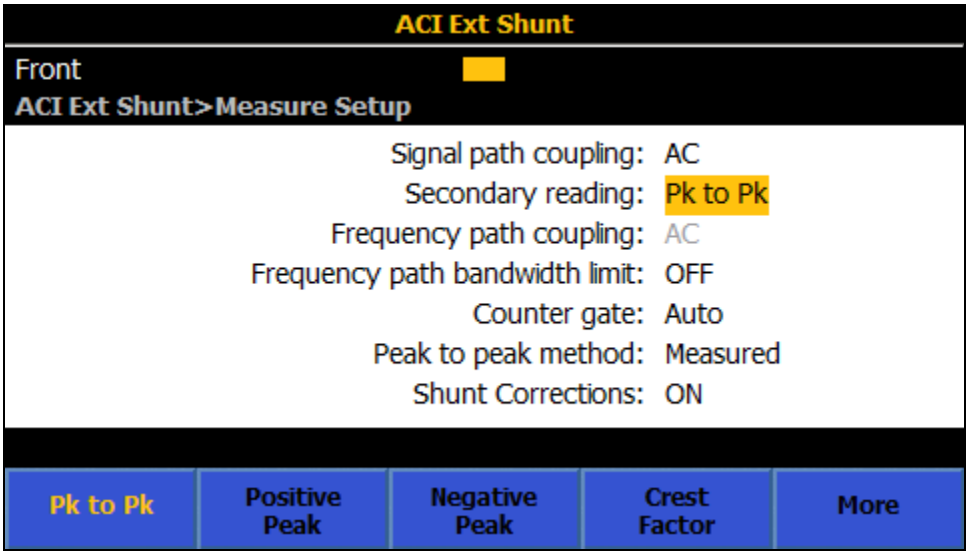

iei017.png

The bottom field, Shunt Corrections ON/OFF determines if the ac-dc differences for the selected shunt are applied to the displayed current level, and the shunt loading is accounted for due to the input impedance of the voltage measurement circuit (10 Mohm in parallel with 80 pF). The main display indicates when corrections are ON. Note that if set to OFF, an Instrument reset (under **Instrument Setup > Reset Instrument**) retains the OFF setting. If the Product is power cycled, Shunt Corrections is always set to ON.The Product uses a linear interpolation of the loaded ac-dc differences between the frequency points to make corrections. See the screen below:

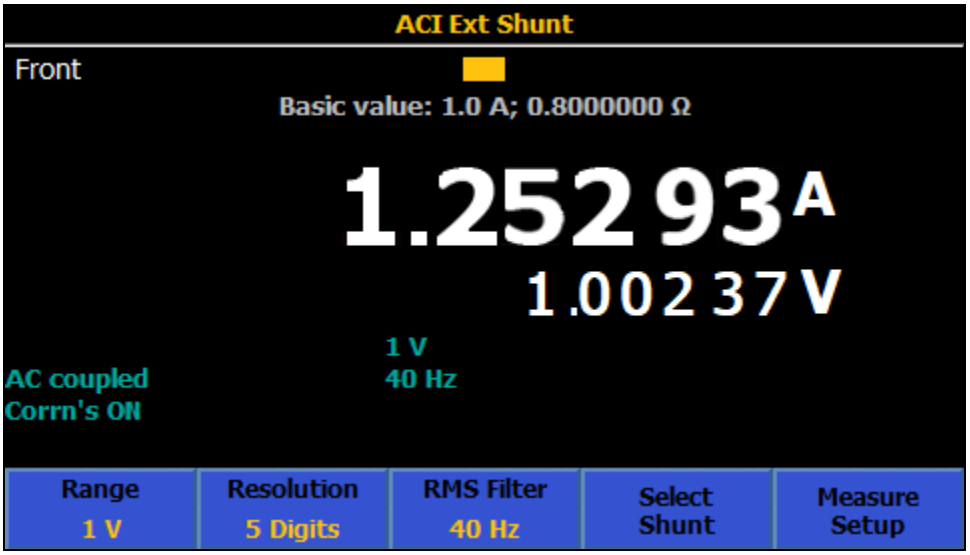

iei019.png

Measure AC Current with ACI Ext Shunt

The ACI Ext Shunt function provides a calculated current reading for a specified current shunt. The ACI Ext Shunt function is particularly useful for current shunts that have corrections for ac-dc differences at different frequencies, like the Fluke A40B series current shunts. Connections are shown in Figure 18.

Similar connection considerations are required to the external shunt inputs as for ac current measurement. Use shielded twisted pair cable to reduce induced interference signals, and connect GUARD to the source of common mode voltage with the screen, to provide a separate common mode current path. Use high-quality leads and connections to minimize the burden (compliance) voltage generated for current measurements and thus, improving measurement accuracy. Fluke Calibration recommends that leads of the minimum-practical length be used to reduce lead capacitance, lead inductance, and loop area. The external shunt sense terminals should be connected to the Product V INPUT HI and LO terminals using shielded leads.

⚠⚠ Warning

HIGH CURRENT FLOW

To prevent possible electrical shock, fire, or personal injury:

- **Do not exceed the Measurement Category (CAT) rating of the lowest rated individual component of a Product, probe, or accessory.**
- **Only use probes, test leads, and accessories that have the same measurement category, voltage, and amperage ratings as the Product.**

Note

When you make ac current measurements pay close attention to the lead impedance, especially lead capacitance at high frequencies on the lower current ranges. (See Measure AC Voltage*)*

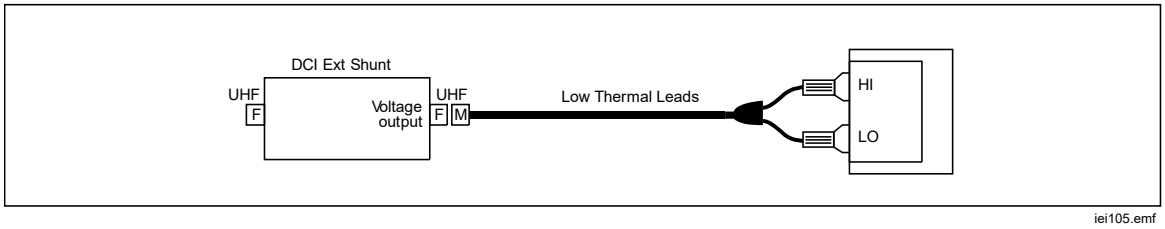

Figure 18. ACI Ext Shunt

PRT

Push MORE, F5 (**More**), then F3 (**PRT**) (platinum resistance thermometer) to use the PRT measure function. The PRT measure function provides a temperature readout by measuring the resistance of a connected PRT. 2 Wire, 3 Wire, or 4 Wire measurements can be made.

PRT Submenu

This section explains the PRT submenu.

F1 (**Probe R_o**): Selects either a 100 Ω or 25 Ω PRT.

F2 (**Resolution**): The default resolution is 5 Digits. The other choice is 6 Digits.

F3 (**Probe**): Allows selection of 2 Wire, 3 Wire, or 4 Wire PRTs.

F4 (**Units**): This softkey opens a menu to select the desired temperature units, K, °C, or °F.

F5 (**Measure Setup**): Provides access to a menu that changes the reading rate similar to DCV. Choices are Auto, Auto Fast, and Manual.

Measure PRTs

Before you connect a 2- or 3-wire PRT, you must perform Input zero on the resistance ranges shown in Table 15.

Table 15. Measure PRTs

Probe R_0	2-wire PRT	3-wire PRT
25 Ω	100 Ω, LoI ON, 2-wire	100 Ω, LoI ON, 2-wire and 4-wire
100 Ω	100 Ω, LoI and 1 kΩ, LoI OFF, 2-wire	100 Ω, LoI and 1 kΩ, LoI OFF, 2-wire and 4-wire

Note

4-wire PRT uses True Ohms so zeroing is not required.

Connect the PRT probe to the Product in the same way as when making resistance measurements, using the appropriate connection shown in Figure 19. Select the corresponding 2-, 3-, or 4-wire probe type using the **F3** (**Probe**) softkey. Fluke Calibration recommends that Ext. Guard is ON (**INPUTS**, **F4** (**Ext. Guard**)).

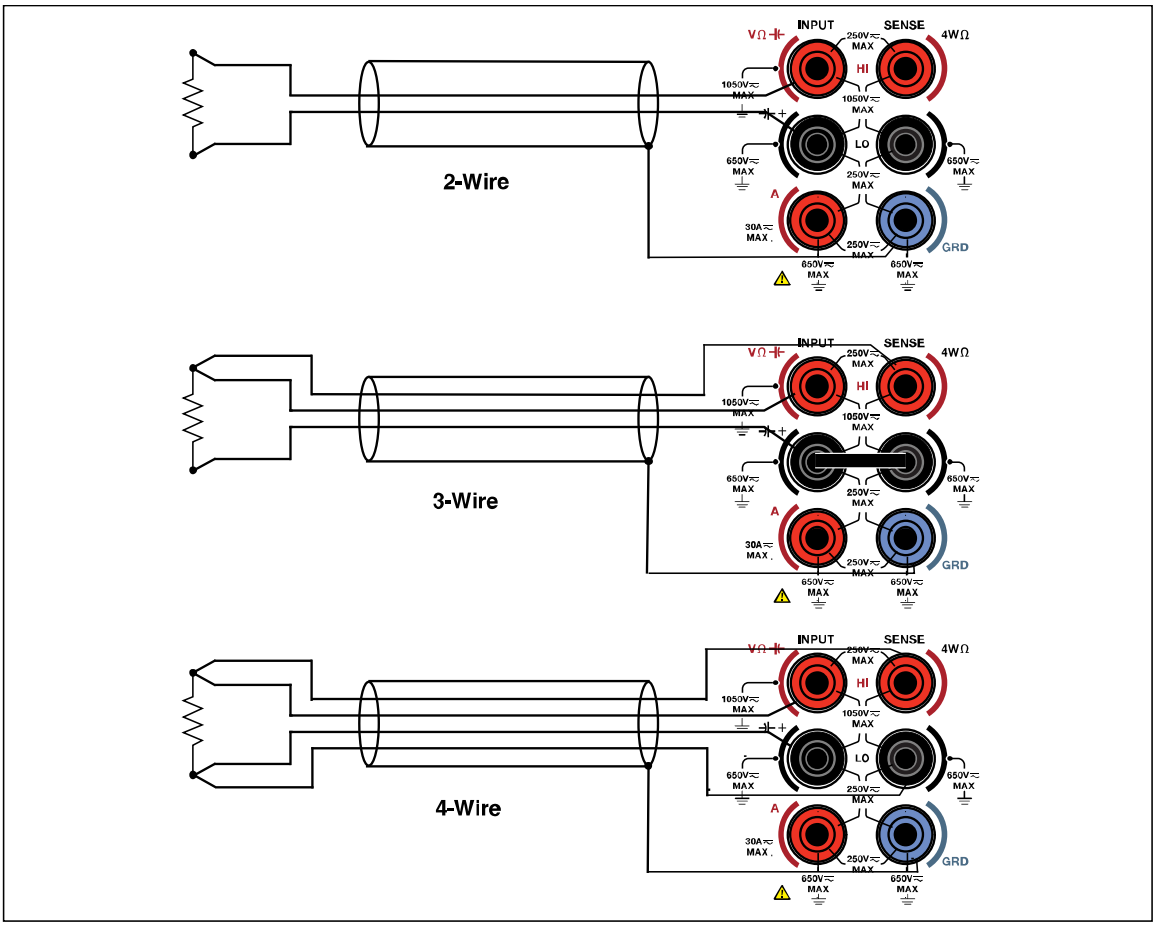

adj131f.emf

Figure 19. PRT Connections

Note

The 3-wire PRT connection is actually a 4-wire measurement, and requires a short between the low terminals as depicted in Figure 19.

Thermocouple

The Thermocouple Measure function provides 2-wire measurements that use the V INPUT HI and LO terminals, converting dc voltage to temperature. Push MORE, F5 (**More**), then F4 (**Thermocouple**) to use the Thermocouple Measure function.

Thermocouple measurements require an external cold junction compensation. The types of thermocouples supported are J, R, E, N, U, C, L, T, B, K, and S. The Product uses the 100 mV dc range to make all thermocouple measurements.

Thermocouple Menu

F1 (**Type**): Push this softkey to see the thermocouple choices. Make the thermocouple type selection with the softkeys or use the navigational keys to highlight the selection and the push SELECT. The Product has built-in tables that convert the measured voltage to temperature based on the thermocouple type chosen.

F2 (**Resolution**): The default resolution is 5 digits. The other choice is 6 Digits.

F3 (**2nd reading**): Select ON to show the actual dc voltage measured for the 2nd reading.

F4 (**Units**): This softkey opens a menu to select the desired temperature units, K, °C, or °F.

F5 (**Measure setup**): Provides access to a menu that allows you to change the reading rate similar to DCV. Choices are Auto, Auto Fast, and Manual.

Measure Thermocouples

Thermocouples are widely used for measuring temperature over a wide range, with rapid response and no self-heating. The Thermocouple function can be used to calibrate actual thermocouples themselves or to calibrate the electronic thermocouple output of thermocouple simulators like those found in the Fluke 5522A Multi-Product Calibrator. Both of these applications require the use of an external reference junction, often referred to as the cold temperature junction.

A thermocouple in general, shown in Figure 20, consists of two wires of dissimilar metals joined together at one end, called the measurement or “hot” junction. The other end, where the wires are not joined, is connected to the Product V INPUT HI and LO terminals using copper wire. A reference junction (also called the “cold” junction) must be provided between the thermocouple metals and the copper wires.

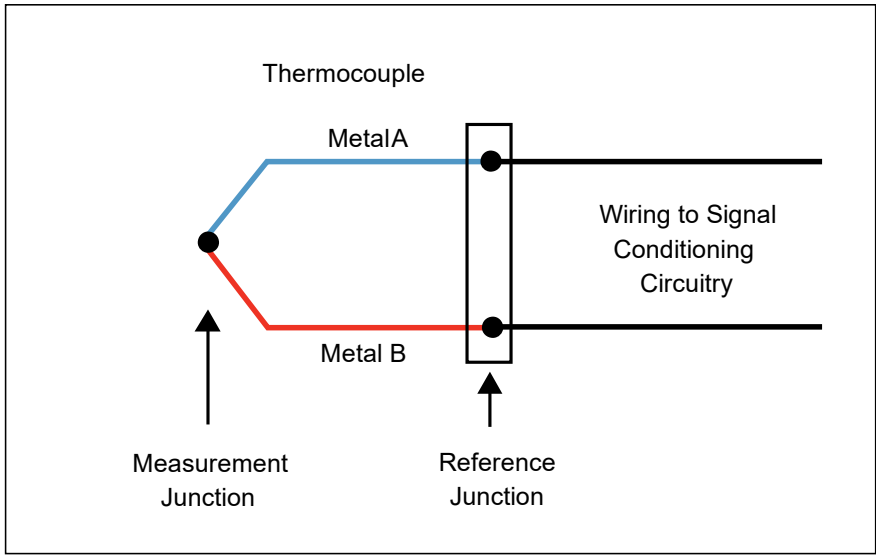

iei107.emf

Figure 20. Thermocouple

The temperature of the thermocouple cold junction must be known to get an accurate absolute temperature reading from a thermocouple simulator. Using a commercially-available zero-point dry-well as the cold junction, Figure 21 shows the connections required between the Product and the DUT, an electronic simulator in the Fluke 5522A.

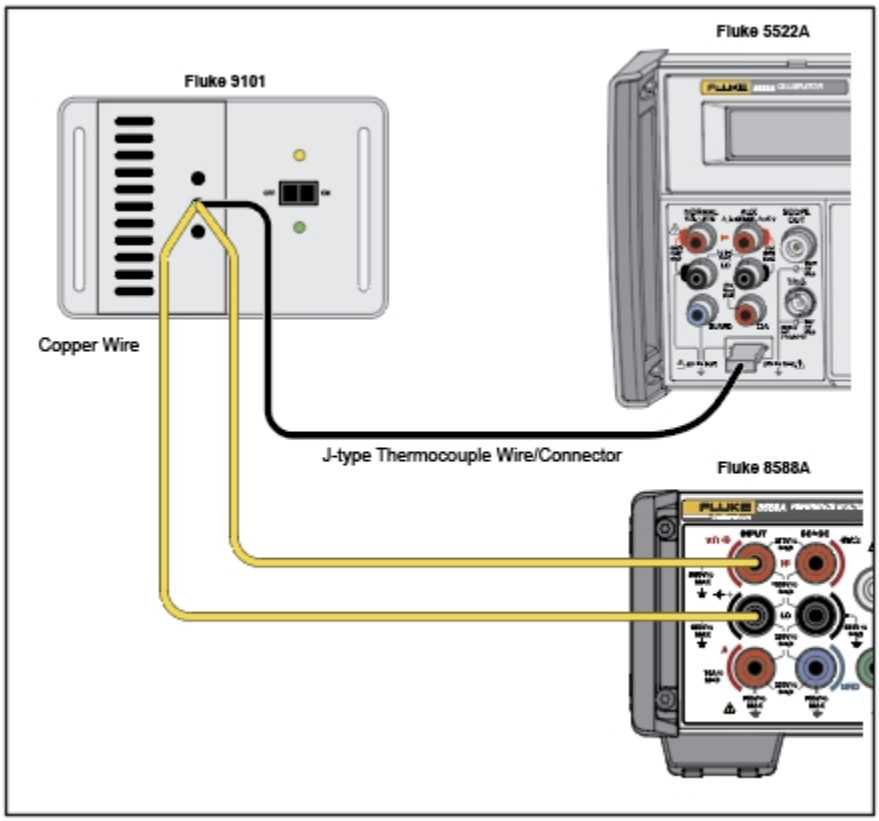

iei338.jpg

Figure 21. Thermocouple Connection

In this example, the Fluke 5522A simulator and the Product are both set to a J-type thermocouple (constantan and iron). You must use the correct J-type hookup wire and connector between the DUT and the cold junction. The connection from the cold junction to the Product must be with copper wire. Instead of the zero-point dry-well, a dewar with an ice/water slurry mixture can also be used. For the best accuracy, and to get good test-uncertainty-ratios (TURs) against the most demanding thermocouple simulators, use an external reference thermometer to characterize the Fluke 9101 or ice/water slurry mixture.

The connections to calibrate actual thermocouples also requires an external cold junction. Use a setup that uses a zero-point dry well as in Figure 21, or make an external cold junction with a dewar and ice bath as in Figure 22. A J type thermocouple (constantan and iron) is shown. Copper wires are used to connect from the cold junction to the Products V INPUT HI and LO terminals. The ice bath reference in this example is comprised of a dewar with an ice/water slurry mixture. See Figure 22.

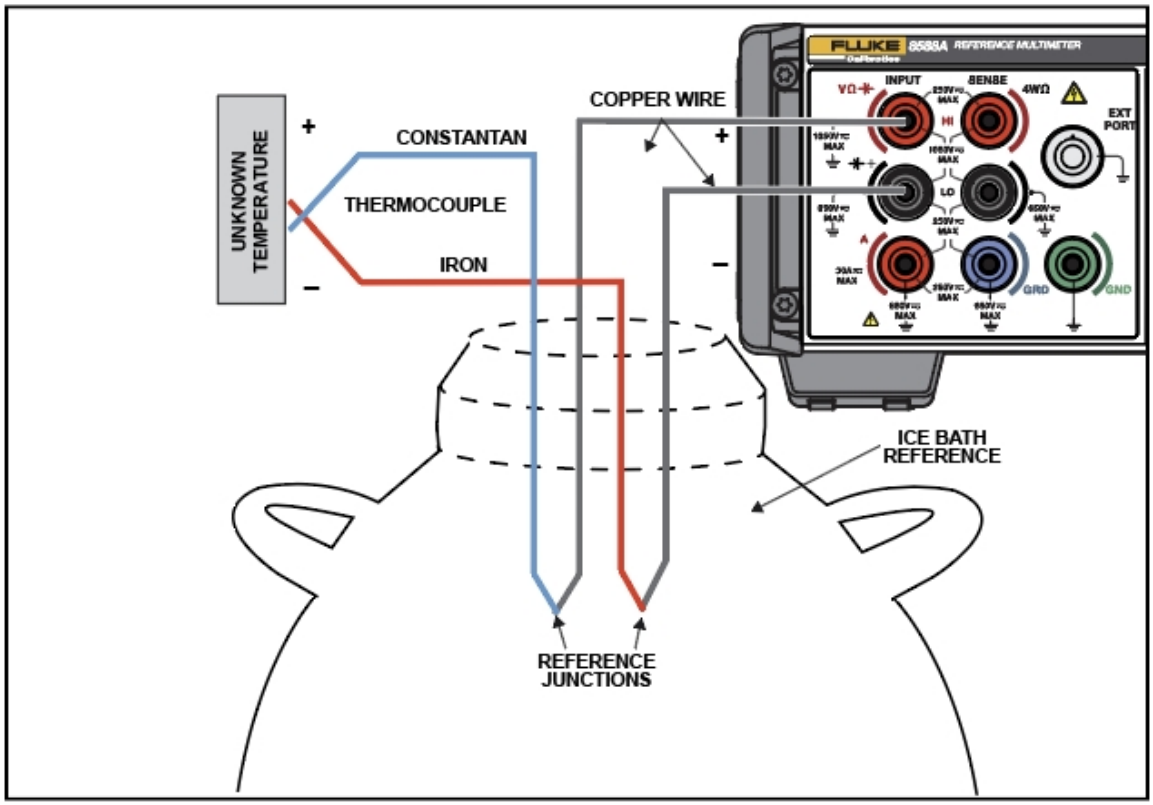

iei108.jpg

Figure 22. Thermocouple Circuit to Calibrate J-type Thermocouple

Features

Input Terminal Selection

The Product has front and rear INPUT terminals. Push INPUTS within any function to open the various input configurations. Softkeys F1 to F5 configure the terminals.

⚠⚠Warning

To prevent possible electrical shock, fire, or personal injury, do not apply more than the rated voltage, between the terminals or between each terminal and earth ground.

F1 (**Terminals**): Is used to select which terminals are in use. Choices are:

- **Front:** Selects the front terminals only for all inputs.
- **Rear:** Selects the rear terminals only for all inputs.
- **Scan: Front – Rear**: Measurements are taken from the front terminals and then the rear terminals to produce the displayed result, which is the difference between the measurements from the front and rear terminals.
- **Scan: Front / Rear:** Measurements are taken from the front terminals and then the rear terminals to produce the displayed result, which is the ratio of the front measurement to the rear measurement.
- **Scan: (Front – Rear) / Rear:** Readings are taken from the front terminals and then the rear to produce the displayed result. This is the normalized ‘deviation’ value.
- **Isolated:** When enabled, the Product is in a state of isolation and deselects all INPUT terminals. This state is useful in a remote control system to isolate the Product from the system analog bus. See *Specifications.* See the *Remote Programmer’s Manual.*

F2 (**Front Delay)**: Sets the delay before the front measurement is taken in a scan operation. In Tru Ohms ratio, the front delay is implemented for measurements in both the forward current and the reverse current. When the Product is set as an input of front only, Tru Ohms also uses the front delay for the forward and reverse currents. The delay can be set to Auto (default) or between 0 and 65 000 seconds.

The delay setting and resolution is shown in Table 16.

Table 16. Delay Settings and Resolution

Delay Setting	Resolution
<1 s	1 ms
1 s to 10 s	10 ms
10 s to 65 000 s	100 ms

1. Use the cursor keys and SELECT to change from Front Delay: Auto to Front Delay: [Value].
2. Use the cursor keys to select Front Delay.
3. Use the numerical keypad to change the value.
4. Push ENTER to change and store the new value.
5. Push BACK to get back to the main input screen.

F3 (**Rear Delay**): Sets the delay before the rear measurement is taken in a scan operation. In Tru Ohms ratio, the rear delay is implemented for measurements in both the forward current and the reverse current. When the Product is set as an input of rear only, Tru Ohms also uses the rear delay for the forward and reverse currents. The delay can be set to Auto (default) or between 0 and 65 000 seconds. See Table 16 for delay setting and resolution.

1. Use the cursor keys and SELECT to change from Rear Delay: Auto to Rear Delay: [Value].
2. Use the cursor keys to select Front Delay.
3. Use the numerical keypad to change the value.
4. Push ENTER to change and store the new value.
5. Push BACK to get back to the main input screen.

Use the Scan Operations

When the terminals are set to any one of the scan modes (Front - Rear, Front / Rear, and (Front - Rear) / Rear), measurements are taken alternately from the front and rear terminals. These measurements are combined mathematically to produce a single result. Scan operations are available in these functions: DCV, ACV, Ohms, Capacitance, and Thermocouple. They are not available in DCI, ACI, digitize, RF Power, DCI Ext Shunt, ACI Ext Shunt, Frequency Counter, and PRT.

Note

In the Ohms function the scan operation switches both current stimulus and potential difference measurement between the front and rear terminals. This operation, also called Tru Ohms Ratio, scans only the potential difference measurement between front and rear terminals, maintaining the common stimulus current through front and rear terminals. See 4W Tru Ohms Scan Mode (Tru Ohms Ratio*).*

Scan Sequences

As the Product scans, each trigger event produces one scan result. The trigger settings determine all the readings that make up a scan result. Scan runs through this sequence for all scan operations except Tru Ohms Ratio, described below:

1. The Product waits with the rear terminals selected, and with the front terminals isolated.
2. Upon receipt of a trigger, the Product executes any trigger delay.
3. After this delay, the Product changes to select the front terminals with the rear terminals isolated.
4. The Product executes the front delay and takes a measurement.
5. The Product selects **Rear Input** with the front terminals isolated.
6. The Product executes the rear delay and takes a measurement
7. The displayed result is the combination of the two measurements.

The Product waits with **Rear** selected (front is isolated) for next trigger.

4W Tru Ohm Scan Mode (Tru Ohms Ratio)

When you select 4W Tru mode in Resistance (Ohms), the Scan modes above (Front - Rear, Front / Rear, and (Front - Rear) / Rear) are configured uniquely in a mode Fluke Calibration calls Tru Ohm Ratio, a feature also found in the Fluke 8508A Reference Multimeter. The Product applies a stimulus current of alternating polarity through both resistors simultaneously, and the potential difference measured across the resistors is scanned between the front and rear terminals, see Figure 23. This measurement configuration is beneficial for lower value resistance measurements between an unknown and a reference resistor, and reduces self-heating (power) modulation that would otherwise result from scanning the stimulus current between the two resistors under test. Tru Ohms Ratio is only selectable if the ohms range is locked. If Auto range is selected, the scan modes are greyed out and Tru Ohms Ratio is not available. See the screen below.

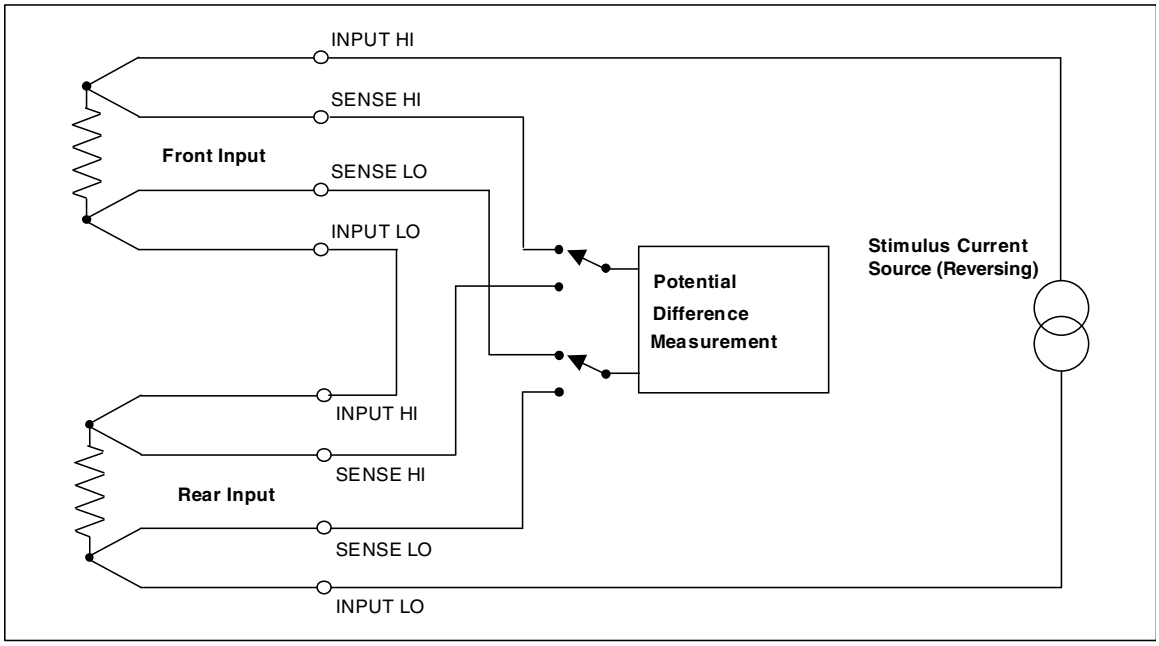

adj132f.emf

Figure 23. Tru Ohm Ratio Measurements

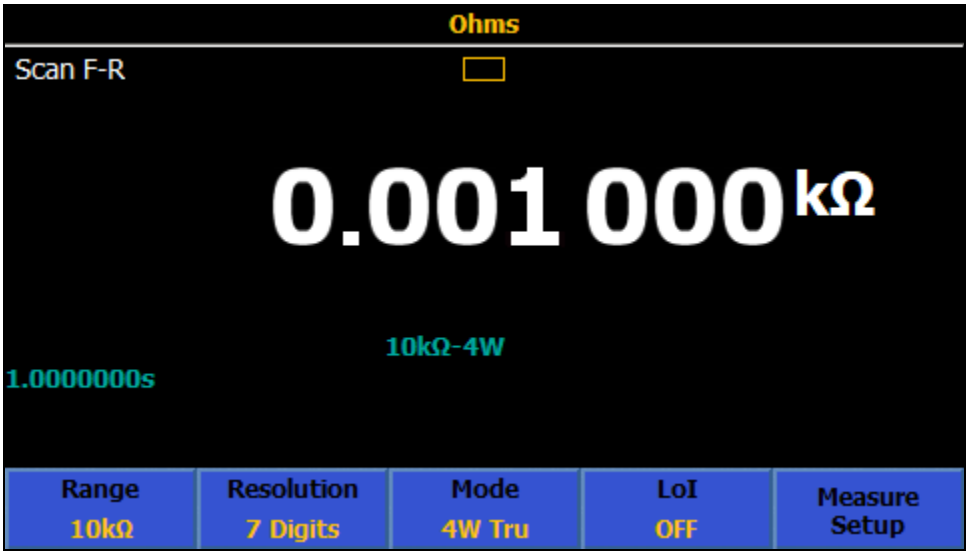

iei036.png

The Scan sequence of measurement in Tru Ohms Ratio is:

1. The Product waits with Forward current applied to the two resistors, with the rear SENSE terminals active.
2. Upon receipt of a trigger, the Product executes any trigger delay.
3. After this delay, the Product changes to sense at the front terminals.
4. The Product executes the front delay, and then a measurement is made with the Forward current.
5. The Product switches to the Reverse current, executes the front delay, and then takes another measurement.
6. The Product sets the rear SENSE terminals.
7. The Product executes the rear delay, and takes a measurement with the Reverse current.
8. The Product switches to the forward current, executes the rear delay, and then takes another measurement.
9. The displayed result is the combination of the four measurements made.
10. The Product waits with forward current and rear SENSE terminals activated until the next trigger.

Auto range is not available in this mode.

⚠⚠Warning

To prevent possible electrical shock, fire, or personal injury, do not connect external capacitance >50 nF to the Product terminals.

⚠Caution

HIGH VOLTAGE. To avoid equipment damage when using the HV function make sure that circuits or components connected to the Product can withstand at least 240 V dc.

External Guard

F4 (**Ext. Guard**) is part of the Inputs menu. Push F4 (**Ext. Guard**) to turn the Guard to ON and OFF.

F4 (**Ext. Guard**) has these choices:

- **OFF** (default): The GUARD terminals on the front and rear panels are isolated from each other and from any internal connection. The internal guard shields connect directly to the internal 0 V.
- **ON**: The internal guard shields are disconnected from the internal 0 V, and connected to the GUARD terminal of the selected front or rear input. See *Measure DC Volts*.

In the Ohms or PRT functions the external guard is modified to provide an Ohms guard. In these cases the internal guard shields, and selected front or rear GUARD terminal connects to the internal 0 V. See Figure 24 and *Measure Resistance*.

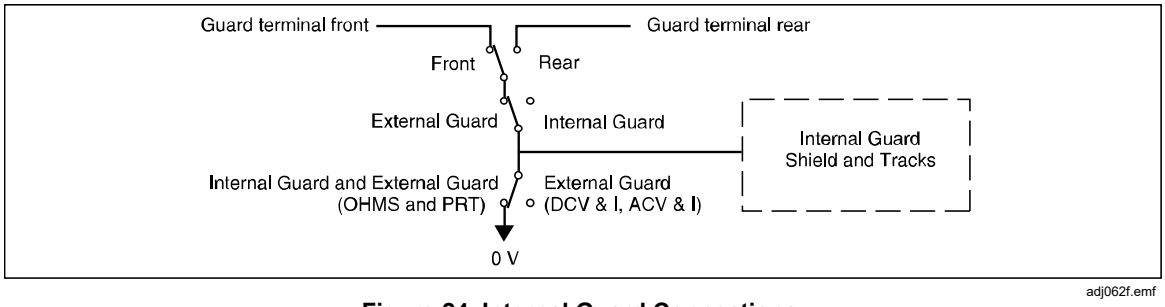

Figure 24. Internal Guard Connections

Output Signal

F5 (**Output Signal**) controls the behavior of the rear BNC connector labeled TRIG OUT. Push F5 (**Output Signal**) to open the Output Signal screen. Use the cursor keys and SELECT to choose from:

- **OFF**
- **Signal Acquired**
- **Aperture open**
- **Reading counts complete**
- **On Event**
- **Reading complete**

Use F1 (**Polarity**) to change the polarity from POS to NEG.

When you select Aperture Open, the output is a square wave that is active while the aperture is open. The TRIG OUT signal is an edge for all other selections. Use the TRIG OUT signal.

TRIG OUT

Many applications benefit from synchronizing the Product readings to other external equipment. You can program the Product to output a TTL-compatible signal on its Trigger Out (TRIG OUT) BNC connector when a specified reading event occurs. The TRIG OUT signal is comparable to the HP/Agilent/Keysight 3458A EXTOUT signal. See Tables 17 and 18.

Push **INPUTS**, and then **F5** (**Output Signal**) to configure the TRIG OUT reading event. See the screen below.

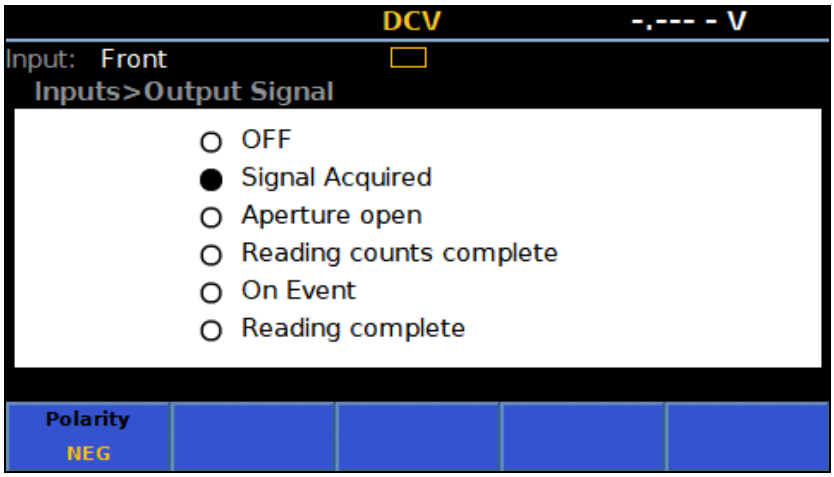

i004.png

Use the navigation keys and select the appropriate behavior for the TRIG OUT signal. See Figure 25 for a detailed explanation.

Table 17. Output Behavior Choices

Trigger Out Reading Event	Description	Typical Usage
Signal Acquired	1 µs output pulse occurs at the end of the signal acquisition (a/d integration period), before the reading is actually complete. Push F1 (**Polarity**) to select a Pos (high) or Neg (low) pulse. See Figure 25.	Trigger an external scanner to the next channel. If the scanner is a slower, relay type, this setting advances the channel sooner than the Reading Complete event below.
Aperture open	Square wave output with a high or low level during the signal acquisition (integrate) period. Push F1 (**Polarity**) to select a Pos (high) or Neg (low) level.	To minimize noise pickup synchronizes external equipment to only be active when the Product A/D is not acquiring a signal.
Reading counts complete	1 µs output pulse occurs after a specified number of readings is completed. Push F1 (**Polarity**) to select a Pos (high) or Neg (low) pulse. The number of readings is determined by the Count parameter in Trigger Setup. See *Triggering Measurements*.	Synchronize an external scanner to the Product when making multiple readings per scanner channel.
On Event (new)	1 µs output pulse occurs when a Limit is exceeded. Limits are set in the Analyze function.	Advance an external scanner to the next channel when a voltage set by the Limit Math function is exceeded.
Reading complete	1 µs output pulse occurs after each reading for any measurement function. For ACV and ACI, which are sampled measurements, a pulse is output after each computed reading, not after each sample in the measurement process. Push F1 (**Polarity**) to select a Pos (high) or Neg (low) pulse.	Synchronize an external scanner to the Product when making one reading per scanner channel.

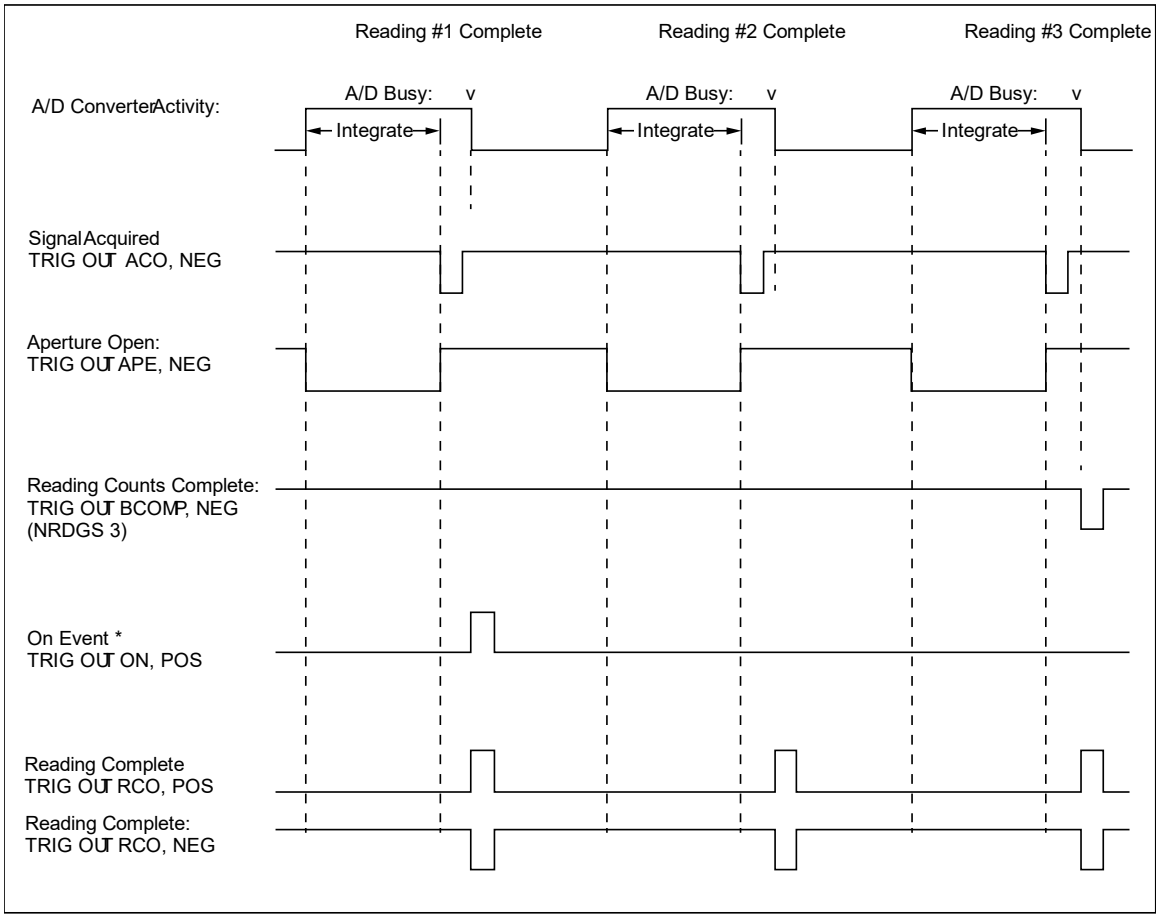

Figure 25. Timing Diagram for TRIG OUT Settings

Table 18 shows the Product Trig Out remote commands compared to the HP/Agilent/Keysight 3458A EXTOUT commands.

Table 18. Trig Out Remote Commands compared to the HP/Agilent/Keysight 3458A EXTOUT Commands

8558A/8588A Trig Out	3458A EXTOUT
OFF	OFF
Signal Acquired (ACO)	ICOMP
Once	ONCE
Aperture open (APE)	APER
Multiple readings complete (BCO)	BCOMP
On Event	No equivalent
Reading complete (RCO)	RCOMP
Not implemented	SRQ

Zero

The Zero operation removes unwanted residual offsets in a given function and range. These residual offsets are from either the Product, or from the connection leads being used. Some specifications require the use of Zero or the Math Null function under certain environmental conditions. See *Specifications*.

Zero is used when ambient temperature or input lead configurations change and cause an offset from thermal emfs. Zero can also be used if you want the display to read zero with a zero input and it does not due to small shifts within the Product. (An exception is in ACV and ACI. See *Use the Zero Operation*.) Zero works in all functions except PRT, RF Power, and Frequency Counter, or if a Scan operation is selected.

Zero is retained after Instrument Reset (INST SETUP > Reset Instrument), but removed after power-off.

Math Null, accessed with MATH, is a user-selected entry value that uses either the numeric keypad or the F4 (**Last Reading**) softkey. Math Null is similar to Zero, but it typically is used to offset readings based on other factors besides thermal emfs or lead connections. For example, a calibrator source may have an offset voltage of 10 mV, which can be entered as the "c" value in the Math function. Subsequent measurements of the calibrator source will have the 10 mV offset removed. Math Null is set to Off after an Instrument Reset (INST SETUP > Reset Instrument) or after power-off, and the null value is set to its default.

The Zero operation works up to 1 % of range, for example 100 mV on the 10 V range. In 2 wire ohms, the limit is 1 % of range + 0.5 ohm; and in capacitance, the limit is 1 % of range + 200 pF.

F1 (**Zero Range**): initiates a series of measurements to zero the input and save the result in volatile memory. Zero range only acts on the actual range the Product is in, even if Auto range is selected. An indication of the application of an input Zero is shown on the display, showing Zero On. Independent zero corrections are provided for front and rear terminals and, when in ohms functions, all of the modes and LoI On and Off operation. For ac always use the lowest possible range. After the input Zero in ac, all subsequent readings will be RSS'ed corrected by this zero so the reading may not absolutely show "zero".

F2 (**Zero Function**): initiates a series of measurements on each range in the function starting with the highest range, to determine and correct for the residual offset in each range.

F3 (**Clear Range**): Clears the Zero for the range the Product is currently on. The Zero indicator is removed from the display.

F4 (**Clear Function**): Clears the Zero for the function the Product is currently on. The Zero indicator is removed from the display.

F5 (**Abort Zero**): Aborts the Zero operation that is in progress. If a range or function has a prior Zero value, that value is retained.

Use the Zero Operation

When performing the Zero operation, use the lead configuration for that particular function, as it is typically thermal emfs from the lead connections that need to be corrected. For DCV, ACV, and ohms, short the leads that are being used from HI to LO. For DCI, ACI, and Capacitance, the leads HI to LO should be open. After making the proper lead connections, observe the Product reading and wait for the readings to become stable before you perform the Zero operation. The Zero operation can also be used to have the Product read zero in DCV, ohms, or DCI without the influence of external leads. To do so in DCV and ohms, short the Product inputs with the shorting pcb accessory, and Zero functions or ranges as appropriate. For DCI, leave the Product inputs open.

Ohms: An independent Zero can be executed for the modes (2W Normal, 4W Normal, 4W Tru, 2W HV and 4W HV) as well as for LoI On or Off.

ACV and ACI: A Zero operation may not read exactly zero with the input leads shorted as the displayed readings are root-sum-squared (RSS) with any noise present.

Math

The Math menu provides selections for a variety of linear, averaging, and logarithmic calculations. Push MATH to access the Math menu, available in all functions except Digitize and RF Power. See the screen below:

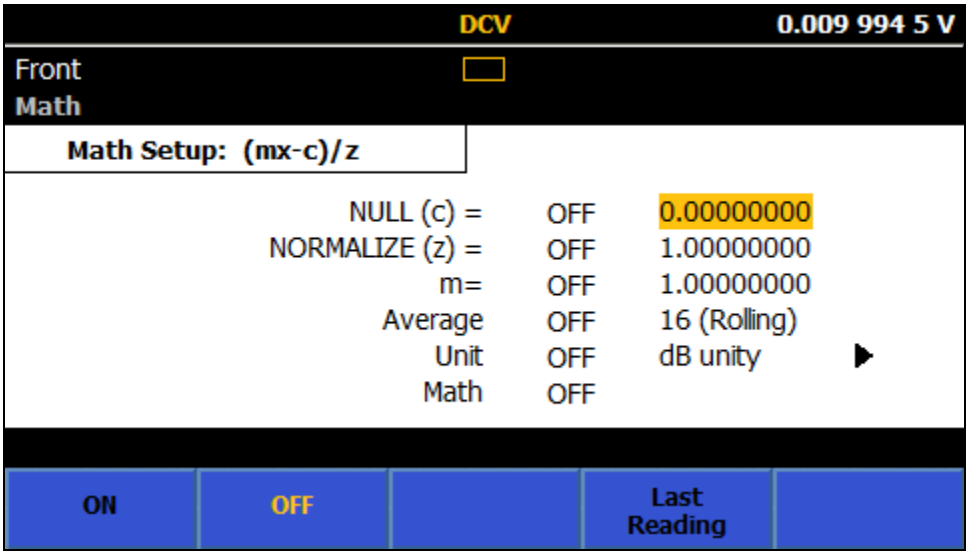

iei037.png

Math operations are performed on the readings obtained from the main measurement function. With math enabled, the displayed reading is based on the formula shown in Math Setup: (mx – c) / z. The “x” in the formula is either a single reading from the Product, or an average reading based on the Average value.

The three constants in the Math Setup formula are:

c: The displayed reading is the measurement minus the constant **c**. **c** is used to offset or null a reading by entering a value using the numeric keypad or by pushing F4 (**Last Reading**). Push F1 (**ON**) (or F2 (**OFF**)) to enable (or disable) the use of this constant.

z: The displayed reading is the measurement divided by the constant **z**. It is used to normalize a reading by entering a value using the numeric keypad or by pushing F4 (**Last Reading**). Push F1 (**ON**) (or F2 (**OFF**)) to enable (or disable) the use of this constant.

m: The displayed reading is multiplied by a constant **m**. It is used to scale a reading by entering a value using the numeric keypad. Push F1 (**ON**) (or F2 (**OFF**)) to enable (or disable) the use of this constant. See the screen below:

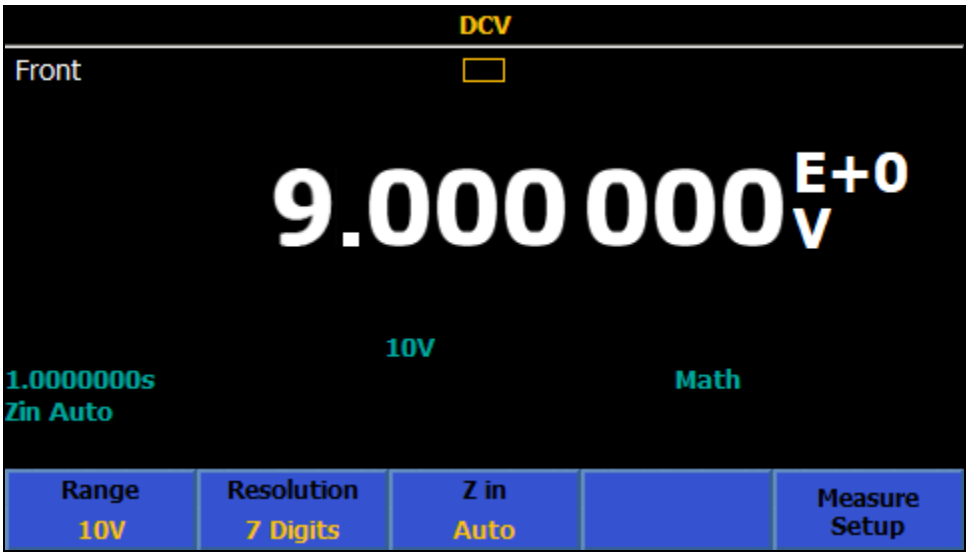

iei038.png

All constants and operations are independently selectable. The activation of any math operation displays **Math** on the main display. An exponent is added to the displayed reading if constants **c**, **z**, or **m** are enabled. All math operations remain on when the function changes except when going into Digitize and RF Power. If Math is enabled in DCV, for example, going into Digitize, turns Math off. Going back to DCV turns Math back on.

Average can be set to either a Block average (F1) or a Rolling average (F2). The default is Rolling. The displayed reading is (mx– c) / z, where x is the average of the readings as set by the Average value. With Average highlighted in yellow, use the numeric keypad to enter the average value. When set to Block average, the displayed reading is updated only after the number of readings determined by Average are obtained, thus causing a slower reading rate. In Rolling average, the displayed reading rate is not affected, although the averaged value will not occur until after the number of readings specified in Average are made. For example, with a rolling average set to 8, the 1st reading will have no averaging, the 2nd readings is the average of readings 1 and 2, the 3rd reading is the average of 1, 2, and 3, and so on.

The displayed reading can also be altered by selecting a Unit parameter. The Unit parameter affects how the reading is displayed after the Math Setup formula is calculated. Measurement Units, for example “V”, will not be displayed when Math Unit is set to ON.

Use the navigation keys to scroll down to Unit and push SELECT. The unit choices and resultant display are

%: When set, the displayed reading is shown as a percentage of the reading (R) at the time % was enabled. The displayed reading is given by

Display = ((Reading - R)/R * 100.

dB, Ref 1mW into 50 ohm: When set, the displayed reading is the power delivered to a 50 ohm resistance referenced to 1mW based on a reading (R). The displayed reading is given by

$$\text{Display} = 10 * \log_{10}(R^2 /50)/1\text{mW})$$

dB, Ref 1mW into 75 ohm: When set, the displayed reading is the power delivered to a 75 ohm resistance referenced to 1mW based on a reading (R). The displayed reading is given by

$$\text{Display} = 10 * \log_{10}(R^2 /75)/1\text{mW})$$

dB, Ref 1mW into 600 ohm: When set, the displayed reading is the power delivered to a 600 ohm resistance referenced to 1mW based on a reading (R). The displayed reading is given by

$$\text{Display} = 10 * \log_{10}(R^2 /600)/1\text{mW})$$

dB, Ref unity: When set, the displayed reading is a ratio in decibels relative to 1. The displayed reading is given by

$$\text{Display} = 20 * \log_{10}(R)$$

Note

The Unit choices of dB, Ref 1mw are available only in DCV and ACV.

Note

To reset all Math constants and settings to their default values, push INST SETUP *and* F1 *(**Reset Instrument**).*

Analyze

Analyze provides different views of measurements. To access the Analyze features, push ANALYZE. To use the full capabilities of the Analyze function, a discussion of measurement records used in the Product is warranted. All measurements are stored in a volatile buffer called a record. When the Product is powered up, the Trigger subsystem default is the free-run mode and readings are captured continuously into a record. The maximum number of readings in a record is limited by the size of the reading buffer and the number of elements in each result as shown in Table 19.

Table 19. Analyze Record

Result Elements	Time Stamp Off	Time Stamp On
Primary value only	15000000	7500000
Primary + secondary value	7500000	5000000
Scan primary values only	5000000	3750000
Scan primary + secondary values	3750000	3000000

If the reading buffer reaches the maximum size, the Product continues to read and display the numerical readings but the readings are not stored or plotted. The statistic calculation also stops.

No readings are placed into a record when the Trigger subsystem is in its Idle state, accomplished by pushing RUN/STOP or by putting the Product into **Continuous OFF** using TRIG SETUP. See *Triggering Measurements*. When the Trigger subsystem comes out of the Idle state, the previous record is discarded and a new record is initiated. A new record also starts when the Product's main function is changed, and when certain parameters within a function are changed, like its range or resolution. Unless a record is copied to another memory location in Memory Setup, it is lost once a new record is started.

These softkeys are available when you push ANALYZE:

F1 (**Statistics**)

F2 (**Chart + Statistics**)

F3 (**Chart Only**)

F5 (**Limits**)

These features are available in all of the functions: DCV, ACV, DCI, ACI, Ohms, Capacitance, RF Power, Frequency, DCI Ext Shunt, ACI Ext Shunt, PRT, and Thermocouple. It is also available in Digitize but Statistics is not available, and Histogram is replaced with Frequency. See *Using Analyze in Digitize Mode*.

F1 (**Statistics**): When pushed, the Statistics feature is displayed, showing the Maximum, Minimum, Span (Max – Min), Average, Standard Deviation, and total number of readings in the data record. Statistics does not start a new record when first enabled, using data in the current record. A new record is started upon power-up, a Product reset, and whenever there is a function change, or a change of parameters in a function. For example, range, resolution and input characteristics; or when the Trigger subsystem is taken out of the Idle mode. A convenient way to start a new record (in all functions except Digitize) is to push **RUN/STOP** . This puts the Product triggering in the Idle mode, then you can push **RUN/STOP** once again to put the Product into the free-run triggering mode.

In Statistics, **F1** (**Std Dev**) determines how the standard deviation displays, either in the units of the measurement, or in parts per million (PPM). See the screen below.

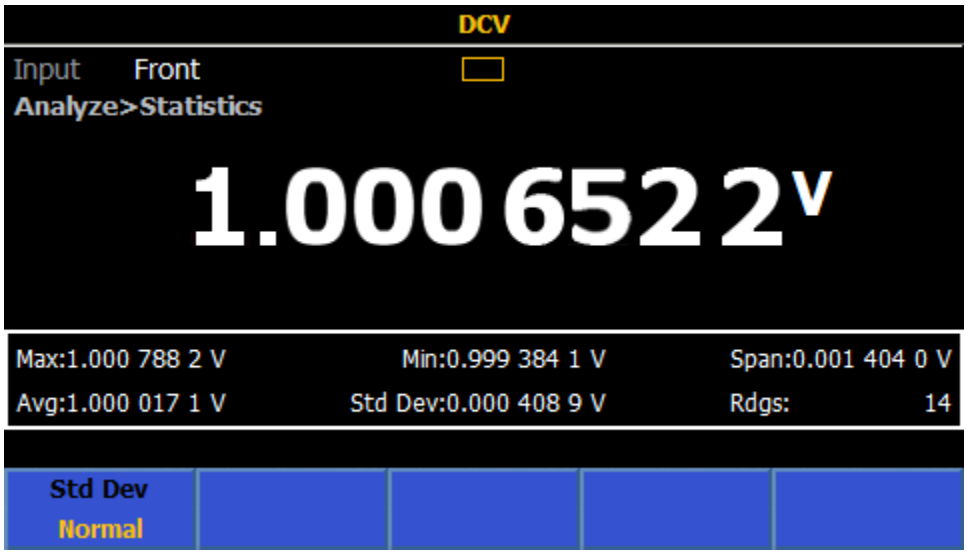

iei039.png

Statistics Example

Measurement: Quantify the performance of a number of dc outputs, making 10 measurements each time to evaluate the average and noise of the output.

Solution: In Trigger Setup, set the Triggers/Arm (Count) to 10. In DCV, push ANALYZE to enable Statistics and then F1 (**Statistics**). Push RUN/STOP to put the Product into the Idle triggering mode. Each push of TRIG gives new 10 readings and stops. The average of 10 readings is displayed, and the standard deviation is representative of the noise in the output signal.

F2 (**Chart + Statistics**): When pushed, Statistics display along with either a plot of the Trend or Histogram. Trend provides a visual trending of measurements over time, where the vertical axis is the amplitude of the signal and the horizontal axis is time. Histogram provides a graphical representation of the distribution of a series of measurements. Measurements are grouped in bins as shown with vertical bars. The vertical axis indicates the relative number of readings for a range of values as a percentage. The sum of the vertical bars equals 100 %. In Chart + Statistic view, about one-third of the Product's display is used for the chart.

F2 (**Chart + Statistics**) menu is comprised of:

F1 (**Std Dev**) where Normal displays the standard deviation of the data record in the measurement units, and PPM displays it as parts per million.

F2 (**Plot**) selects either the Trend or Histogram plots.

If **Trend** is selected,

F3 (**Mode**) selects which part of the data record is displayed. All shows the measurement points from the beginning of the record. The left side of the horizontal axis in this case starts from 0. Recent shows the most recent readings at the time of the button push, where the left side of the horizontal axis is the total number of readings minus 101, effectively showing the last 100 readings at the time of the button push. The right side shows the total number of measurements or the time scale of the record in both cases. See the screens below.

Under Trend Setup:

F1 (**Auto**) gives automatic scaling of the vertical axis such that all data in the record is displayed with optimum vertical scale.

F2 (**Manual**) allows user control of the vertical scale (maximum and minimum).

F3 (**Auto Once**) sets the vertical scale appropriately for the data record captured so far but does not continue to rescale the chart as more data is added (as Auto would do).

F5 (**X-axis**) allows selection of the horizontal axis, as either the number of readings, or time. To use Time, first enable Timestamps in the Memory Setup menu.

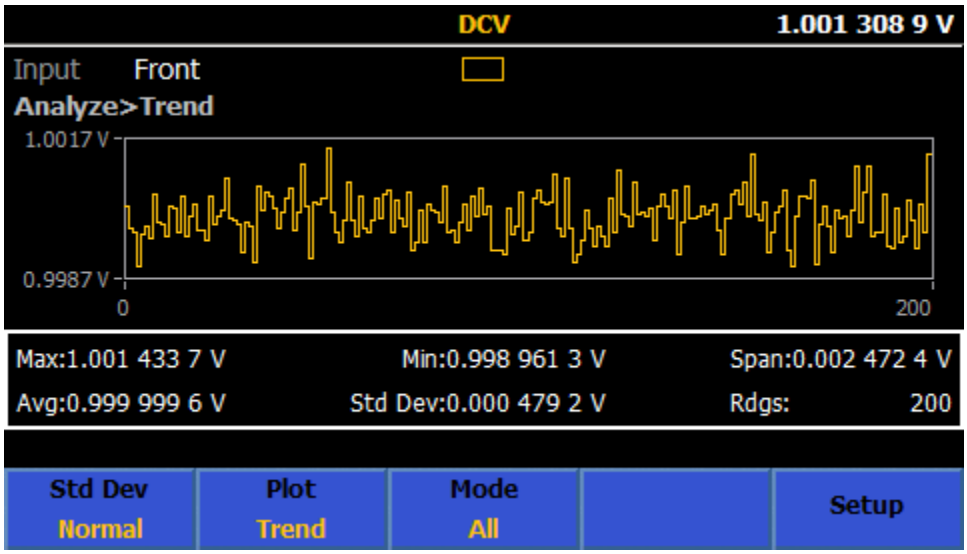

iei040.png

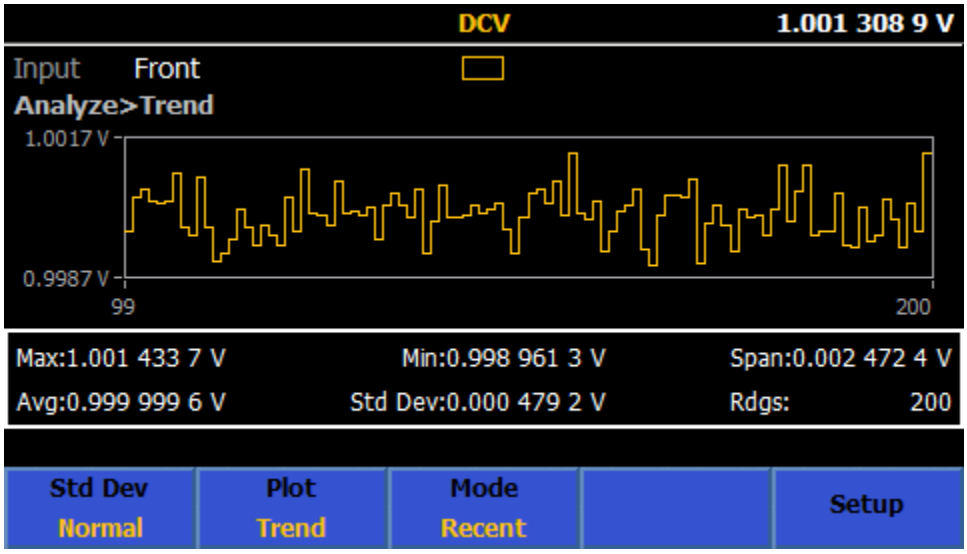

iei041.png

If **F2** (**Plot**) is selected to **Histogram**,

F3 (**Bin Settings**) provides control of the horizontal axis, using either Auto or Manual. As long as new readings are being made, changing between Auto and Manual gives different views of the reading distribution. If the data collection is stopped by a push of **RUN/STOP**, only the present view of the data shows. For example, if Bin Settings is set to Manual, after you push **RUN/STOP**, only the Manual bin view shows.

F1 (**Auto**): The horizontal axis shows the number of bins based on the number of measurements in the data record and the noise level of the input. Typically, the number of bins increases with more measurements, where 100 measurements may give 7 bins, while 1000 measurements may give 11 bins. Auto implicitly assumes a normal distribution.

F2 (**Manual**): For a different view of the measurement value, choose the F2 (**Manual**) setting. The Manual menu # Bins sets the horizontal axis, up to 100 bins. The bin horizontal axis can be specified as either Low and High values, or as a Span around a Center value.

Histogram using similar data records, with Auto or Manual horizontal scale settings are shown below:

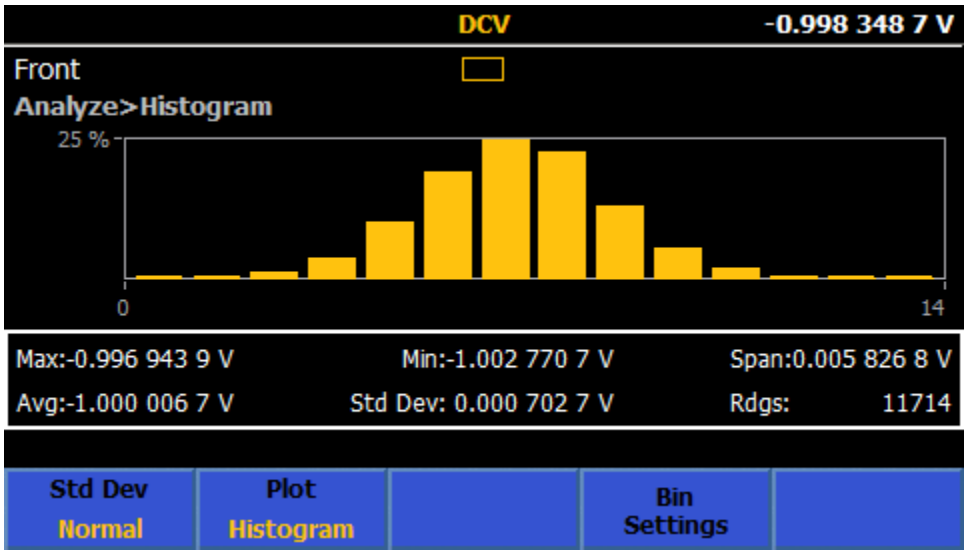

iei042.png

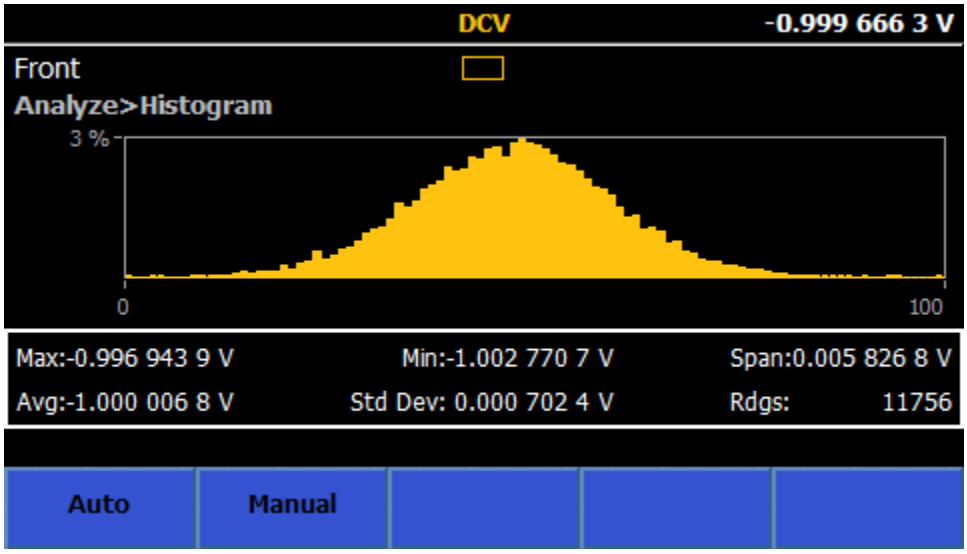

iei043.png

Note

When you use Chart, use a fixed range as Auto range can affect the data. If there are any measurements in the record that are overrange, the chart does not include that data point, and the chart turns red.

The other softkeys in Analyze are

F3 (**Chart Only**): Shows a Chart (either Trend or Histogram) without showing the Statistics data. Behavior and control of the Chart is the same as in F2 (**Chart + Statistics**). In Chart Only, the chart uses the entire display.

F5 (**Limits**): Provides a visual indicator of the input relative to settable higher and lower limits. When either the upper or lower limit is exceeded, the respective up/down arrow turns red as shown in the screen below:

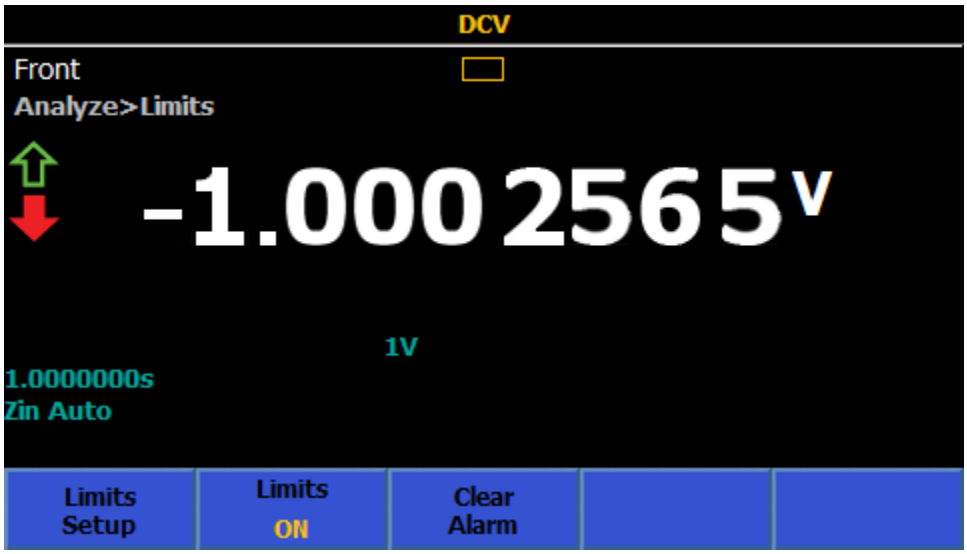

iei044.png

F1 (**Limits Setup**): Set the upper and lower limit using SELECT and the numeric keypad. The Upper and Lower limit can be individually turned On or Off.

F2 (**Limits**): Turns the Limits display ON or OFF.

F3 (**Clear Alarm**): If a limit shows a red indication, pushing this softkey turns it back to green until another reading causes that limit to be exceeded.

Using Analyze in Digitize Mode

In Digitize, Analyze always uses the full record of the digitized data. Charting takes place after the data is captured, not *live* as in the other functions. Analyze in Digitize does not have Statistics as it does in the other functions. It has two ways to chart the data:

Trend chart: The Trend chart is similar to the one in all of the other functions. F3 (**Auto**) or F4 (**Manual**) scales the vertical axis, and an F5 (**Auto Once**) feature which scales the data to fit the chart one time, then reverts to Manual.

Frequency domain histogram chart: The captured data is processed by a Discrete Fourier Transform to convert the digitized time domain data to the frequency domain. The Frequency domain chart provides a convenient way to view the spectral content of the data without external post processing.

When Analyze is enabled, pushing TRIG acquires and plots another data set. See the screens below.

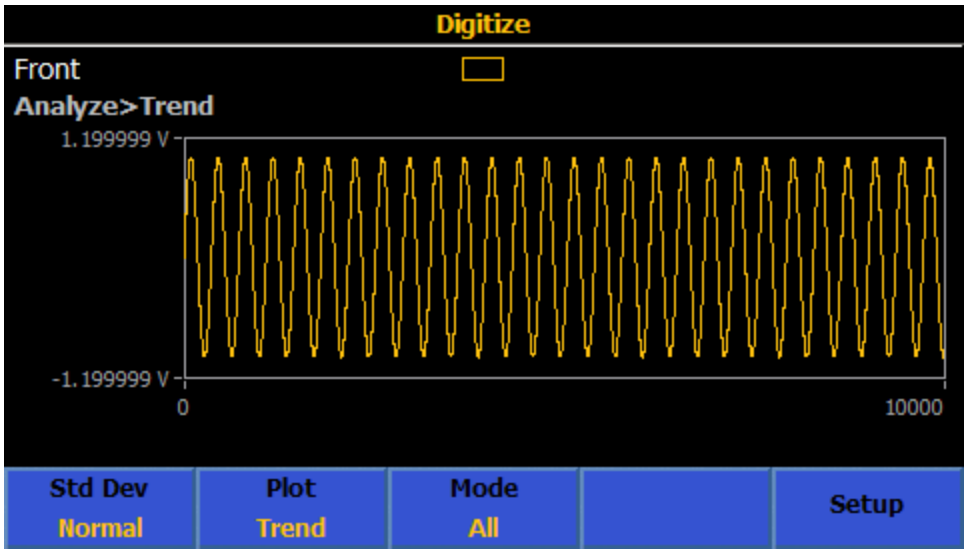

iei045.png

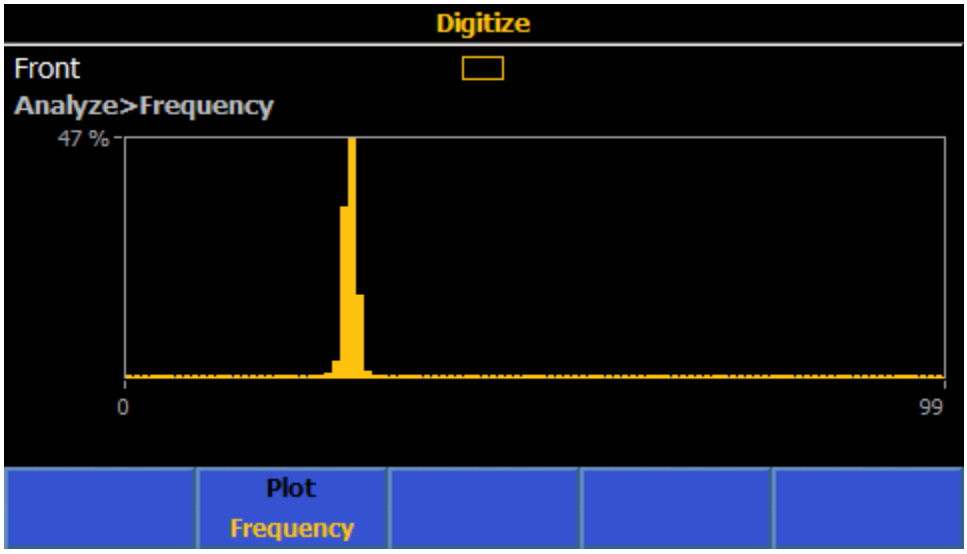

iei046.png

Memory Setup

Push MEM SETUP to access memory management menus. See Table 20. The display shows the Instrument Setup information.

- **# Readings**: Shows the number of readings in the record, and continuously updates if the Product is in the free-run trigger state.
- **Unused volatile memory**: Shows the number of bytes remaining in volatile memory. A reading by itself takes 9 bytes. Other data, for example, multiple measurements and time stamps, can use 5 times more than that.
- **Stored records**: Shows the number of records stored.
- **Unused non-volatile memory**: Shows the number of bytes available in non-volatile memory. Using this memory allows a greater record size, at the expense of some speed degradation in internal data transfers and effective reading rate.
- **Store readings to**: Determines where readings are stored. The default is the volatile buffer. This parameter is set by F3 (**Store Results To**).

Submenus from Memory Setup are accessed with each softkey. See Table 20.

Table 20. Memory Management Menu

Menu Softkeys	Parameter
F1 (**Time Stamp**)	Add time stamps on stored records. The choice is OFF or ON.
F3 (**Store results to**)	Choose where to store the results data. Choices are: • Volatile Buffer Only. This is the default and provides the fastest data transfer into memory and thus, the fastest effective reading rate. The volatile buffer can hold 15 000 000 readings with Time Stamp Off, 7 500 000 with Time Stamp On. When the buffer reaches its storage limit, any new readings are discarded. • Non-volatile memory. This stores results in the on-board non-volatile memory. Use the navigation keys to move the cursor to highlight the storage method and then push SELECT to make the choice. Push BACK to return to the Memory Setup menu.

Table 20. Memory Management Menu (cont.)

Menu Softkeys	Parameter
F4 (**Save Record**)	Push to select the current record into an archived record. Each push of this softkey makes another archived record, as shown by the Stored Records field. If the current record is still accumulating readings (in other words, the Product is in the free-run mode), it continues to do so even after you push F4 (**Save Record**). Push F5 (**Manage Records**) to view archived records.
F5 (**Manage Records**)	Push to enter the Manage Records menu. The Manage Records menu shows the archived records, which are stored as CSV files. See Figure 26. The Records column shows the record file name and uses the date and time. The latest record is shown on top. The # Readings column shows the number of readings in each record. The Comment column contains user entered comments using F4 (**Edit Comment**) softkey. Comments are not stored in the archived record, but only shows up in the Manage Records menu to help identify records. The comment field is 15 characters wide. The Manage Records softkeys are: F1 (**Page Down**): Used to view the archived records. F2 (**Page Up**): Used to view the archived records. F3 (**Copy**): Gives a submenu to copy a record into USB memory, with these softkeys: F4 (**Copy to USB**): Copies the highlighted record into USB memory. F5 (**Copy All to USB**): Copies all of the archived records into USB memory. The Product does not uniquely identify the USB ports. Insert only one USB memory device during this operation. Push BACK to move back to exit this submenu. F4 (**Edit Comment**): Comments can be entered with the pop-up letter keypad and SELECT, or the Product numeric keypad and ENTER. BKSP in the numeric keypad is used for both numeric and letter entry.

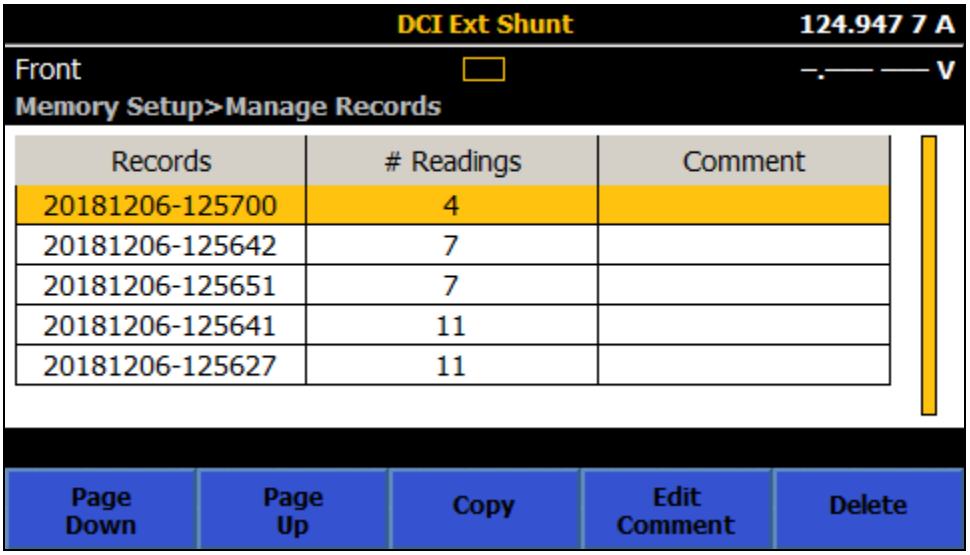

iei047.png

Figure 26. Manage Records Menu

Instrument Setup

Once the Product is on, push INST SETUP to show the Instrument Setup. Before you use the Product, use the Instrument Setup menu to set the Product up according to your preferences. The display shows the **Instrument Setup** information:

- **Model**
- **Serial Number**
- **Firmware**

Submenus from **Instrument Setup** are accessed with each softkey (F1 through F5):

- F1 (**Reset Instrument**): Push this softkey to reset the Product to the default settings, except these settings which are retained:
  - Line Frequency and Ext. Ref. Clk (INST SETUP > **Instrument Settings**)
  - All settings under INST SETUP > **Display settings**
  - All remote settings (INST SETUP > **Remote settings**) except that Emulation defaults to None on power cycle and instrument reset
  - Calibration constants
  - Zero values including the use of Zero
- F2 (**Instrument Settings**): Includes the Display Settings menu, Line Frequency selection (Auto, 50Hz, 60Hz), and Ext Ref Clk (OFF, 1MHz, or 10MHz).
- F3 (**Remote Settings**)
- F4 (**Cal Adjust**)
- F5 (**Diagnostics)**

Each of these menus can be used to change make changes to the way the Product is set up. These menus are explained in the next sections.

Display Settings Submenu

F2 (**Instrument Settings**) provides access to several other global instrument settings as shown in Table 21.

Table 21. Display Settings Submenu

Menu Parameter	Change the Parameter
Language	To change the display language, push F1 (**Language**). The display changes and presents languages choices. Use the navigation keys to highlight the language and push SELECT. When done, push ENTER. The new language is stored. Push BACK to return to the Display Settings screen. The display language choices are: • English • Chinese • French • German • Japanese • Korean • Russian • Spanish
Date	The current date is shown. To change the date, use the navigation keys to move the cursor to highlight this field and use the numerical keypad to make changes. When done, push ENTER. The new date is stored.
Date Format	To change the format of the date, use the navigation keys to move the cursor to this field. The softkeys change to F1 (**MM/DD/YYYY**), F2 (**DD/MM/YYYY**), and F3 (**YYYY-MM-DD**). Push the softkey to select the date format. When pushed, the Date field changes to the new format.
Time	The current time is shown. To change the time, use the navigation keys to move the cursor to highlight this field and then use the numerical keypad to make changes. If Time Format is 12 hr, push F1 (**AM**) or F2 (**PM**). When done, push ENTER. The new time is stored.
Time Format	To change the time format, use the navigation keys to move the cursor to highlight this field and then push F1 (**12 hr**) or F2 (**24 hr**).
Display Brightness	Adjust the display brightness for different lighting conditions. To change the display brightness, use the navigation keys to move the cursor to highlight this field and then use the numerical keypad to make changes. When done, push ENTER to store the brightness level. Note that the brightness setting influences the lifespan of the display backlight. Fluke Calibration recommends that 50% setting or less.
Backlight Dimmer	The Product backlight can be set to dim for user-specified time intervals. Use the navigation keys to move the cursor to highlight this field and then use the numerical keypad to make changes. The backlight dimmer time is entered in the form hhmm. For example, to set the dimmer time to 1 hour 25 minutes, enter 0125. When done, push ENTER to store the change.

Instrument Settings

Use the Instrument Settings menu to change global instrument setting parameters. Push F2 (**Instrument Settings**) to view the Instrument Settings submenu. See Table 22.

Table 22. Instrument Settings Parameters

Menu Parameter	Change the Parameter
Line Frequency	The Product automatically detects the mains frequency but a specific line frequency can be set here in non-volatile memory. To change the Line Frequency, use the navigation keys to move the cursor to highlight this field and then push F1 (**Auto**) or F2 (**50 Hz**) F3 (**60 Hz**). The Auto setting measures the line frequency at the time the Auto settings is made and at Product power-on. It does not continually monitor the line frequency nor does it use an off-nominal value.
Ext. Ref. Clk **(External Reference Clock)**	When on, this enables the rear-panel FREQ REF IN input to use an external 1 MHz or 10 MHz clock. To change the External Reference Clock, use the navigation keys to move the cursor to highlight this field and then push F1 (**OFF**) or F2 (**1MHz**) or F3 (**10MHz**).

Remote Settings

The Remote Settings menu shows a list of parameters for the remote interface. From the Instrument Setup menu, push F3 (**Remote Settings**) to use the Remote Settings submenu. See Table 23.

See the *Remote Programmer's Manual* for details of setting up and using the remote interfaces.

Table 23. Remote Settings Submenu

Menu Parameter	Change the Parameter
Emulation	The Product remote interface can emulate the Fluke 8508A (F2) or the HP/Agilent/Keysight 3458A (F3) digital multimeters. If F1 (**None**) is selected, the Product uses its native SCPI commands.
Active Port	To choose the active remote port, use the navigation keys to move the cursor to highlight the active-port field. The choice are: • F1 (**GPIB**) • F2 (**Ethernet**) • F3 (**USB**)
GPIB Address	To change the GPIB Address, use the navigation keys to highlight the GPIB Address field and then use the numerical keys to change the address. When done, push ENTER to store the address.
Ethernet	To change the Ethernet settings, use the navigation keys to highlight the Ethernet Settings field, push SELECT and then use the navigational keys, softkeys, and numerical keys to change the settings. You can change DHCP, Ethernet IP Address, Gateway, Subnet Mask, Port, Remote IF, and EOL.

Calibration Adjust

Use Calibration Adjust to enhance accuracy. From the Instrument Setup menu, push **F4** (**Calibration Adjust**) to access the Calibration Adjust submenu. The Calibration Adjust menu main screen is shown here:

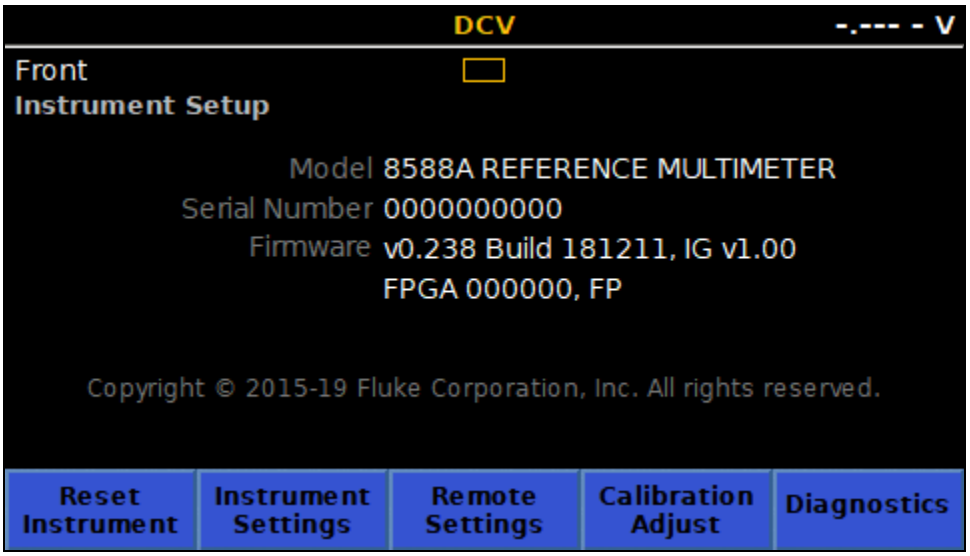

iei025.png

Calibration adjustment corrections are applied to very-significantly enhance accuracy. The Product has two sets of stores which are named Certified and Baseline. Select which corrections are active. The Product leaves the factory with Certified stores active and the calibration certificate refers to performance in this configuration. The Certified corrections are copied to the Baseline stores at the Manufacturer.

Baseline stores would normally only be overwritten after repair. The annual or bi-annual Product recalibration updates the Certified stores but the Baseline is not changed.

Examples of the use of the Product baseline:

- As a monitor of the long-term drift of the Product unaffected by the changes to the certified stores from routine calibration adjustment.
- To prove that the DMM performance was unaffected by transit to and from routine calibration.

Push **F5** (**Enter Passcode**) to enter adjust mode. A passcode is needed for the Product. The default is **123456**. Use the numeric keypad and **ENTER** to input your passcode. See the screen below. Select **Set Active stores** to change the active store if required.

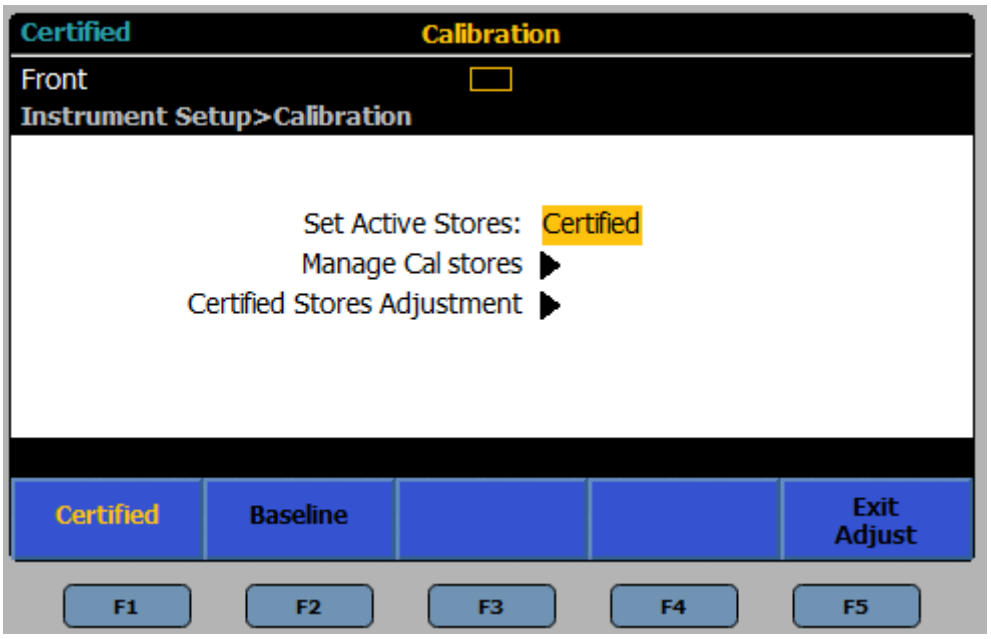

iei026.png

To either Clear the Certified stores or copy the Certified stores over the baseline: Select Manage Cal stores. See the screen below.

lei342.png

Select Certified Stores Adjustment to enter the calibration adjustment menu see the screen below.

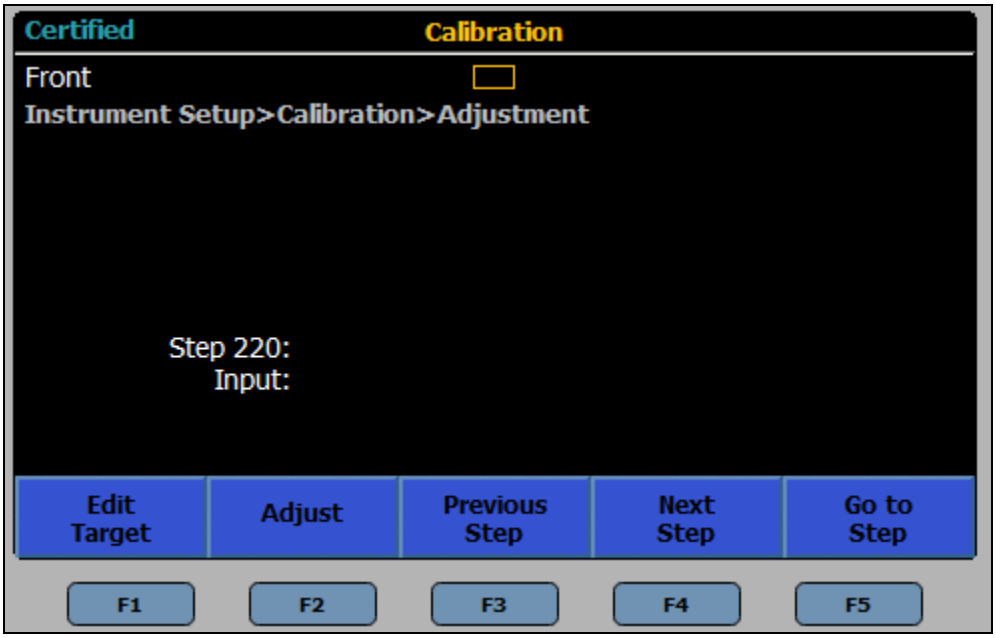

lei343.png

Diagnostics

The final submenu in the Instrument Setup menu is the Diagnostics menu. Push F5 (**Diagnostics**) to enter this submenu. The Product can run a variety of self-tests. See the screen below.

- F1 **(Selftest)**
- F3 **(Keyboard Test)**
- F4 **(Display Test)**

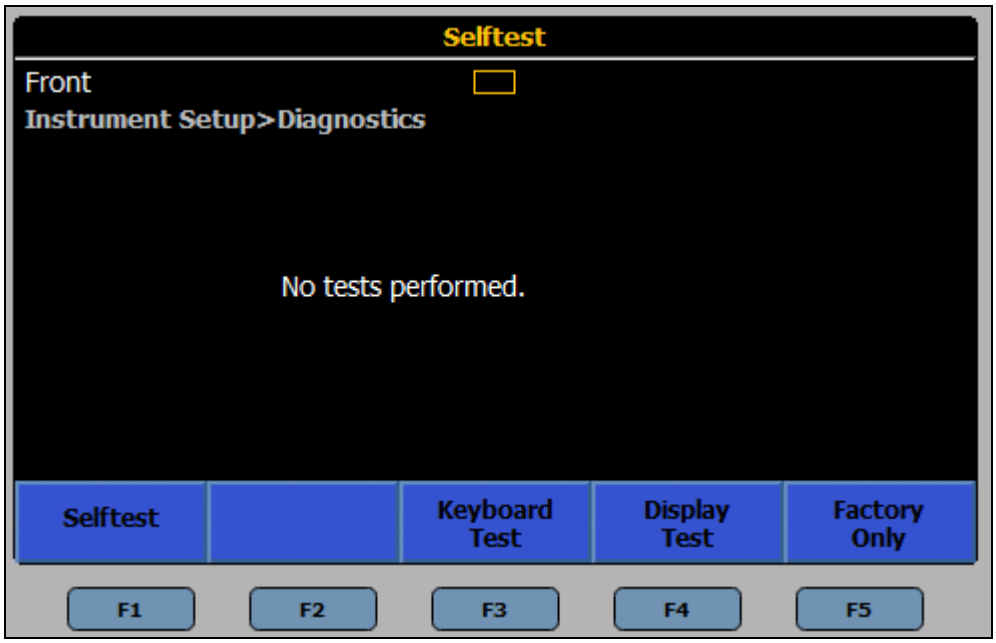

lei344.png

Triggering Measurements

The Product has a triggering subsystem comprised of multiple layers as shown in Figure 27. In the power-on default state, all layers are set to a state that allows the Product to continuously make automatic readings. The triggering subsystem can be configured to make readings in a non-continuous fashion, at very specific occurrences of other events. For many applications, only one or two parameters need to be changed in a given layer, leaving the other layers in the default state.

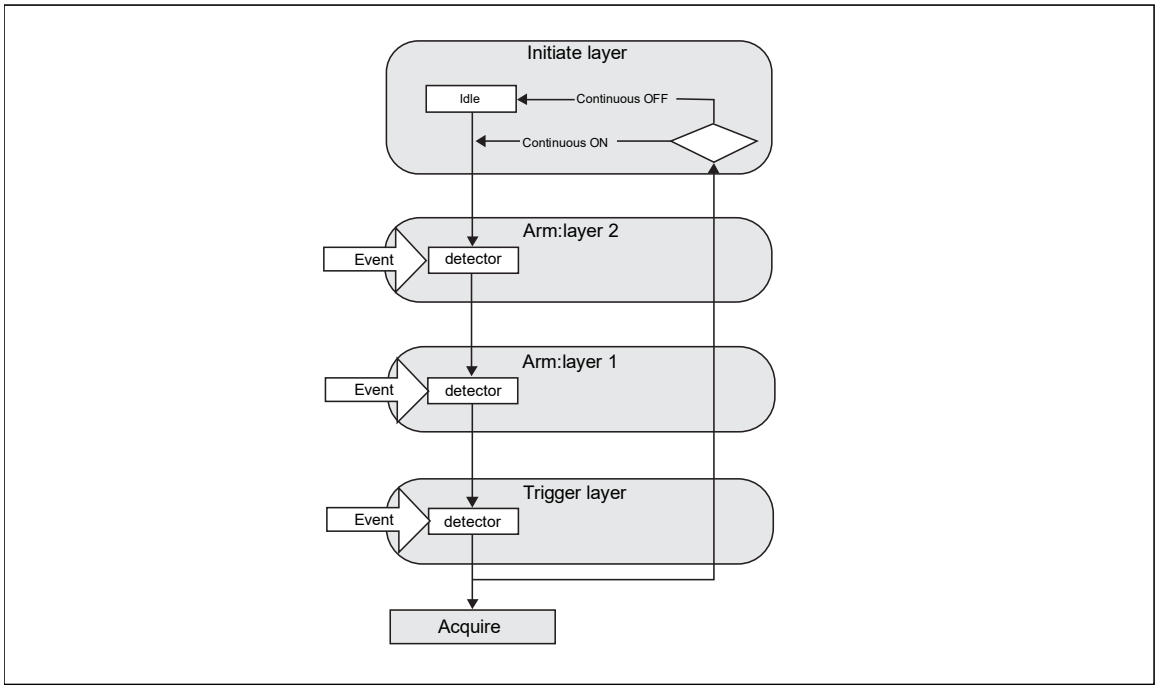

Figure 27. Trigger Subsystem

In the default power-on state, the triggering subsystem is configured to take a measurement without waiting for anything, continuously making measurements. Push **RUN/STOP** to immediately stop any measurements. In the stopped state, **TRIG** can be used to initiate a single cycle of the Trigger subsystem, to give one measurement. Each subsequent push of **TRIG** gives another measurement. Push **RUN/STOP** again to resume continuous measurement.

In this simple example, pushing **RUN/STOP** puts the Initiate layer, into Continuous OFF (or the Idle state), and readings are no longer made. With the Initiate layer set to Continuous OFF, pushing **TRIG** makes a reading by causing the triggering subsystem to flow through the other three layers (Armlayer 2, Armlayer 1, and Trigger) as shown in Figure 27. In their default state Immediate, each of the three layers is set to automatically flow to the next layer, on through to Acquire where the Product makes a reading, and back up to the Initiate layer. Push **RUN/STOP** again to put the Initiate layer back into Continuous ON (or the free-run state) and the Product makes readings automatically.

The Continuous ON/OFF setting in the Initiate layer determines whether the cycle repeats after flowing through Arm2, Arm1 and Trigger; or that it is single-shot measurement. With the exception of the Digitize function, which does not have the Continuous setting, the RUN/STOP key can control this behavior. The Initiate layer can also be manipulated from the Trigger Setup screens under F5 (**Extended Settings**), described later.

Details of the Triggering Subsystem

For greater control of the triggering subsystem, specify an event or multiple events that need to occur in the other three layers, Arm2, Arm1, and Trigger. Figure 28 shows the settable aspects of the Trigger layer: Event settings (and qualifiers), Loop Counter, Event Counter, Delay, and Holdoff timer. Layers Arm2 and Arm1 are very similar to Figure 28 with the exception of Holdoff, which is available in the Trigger layer only.

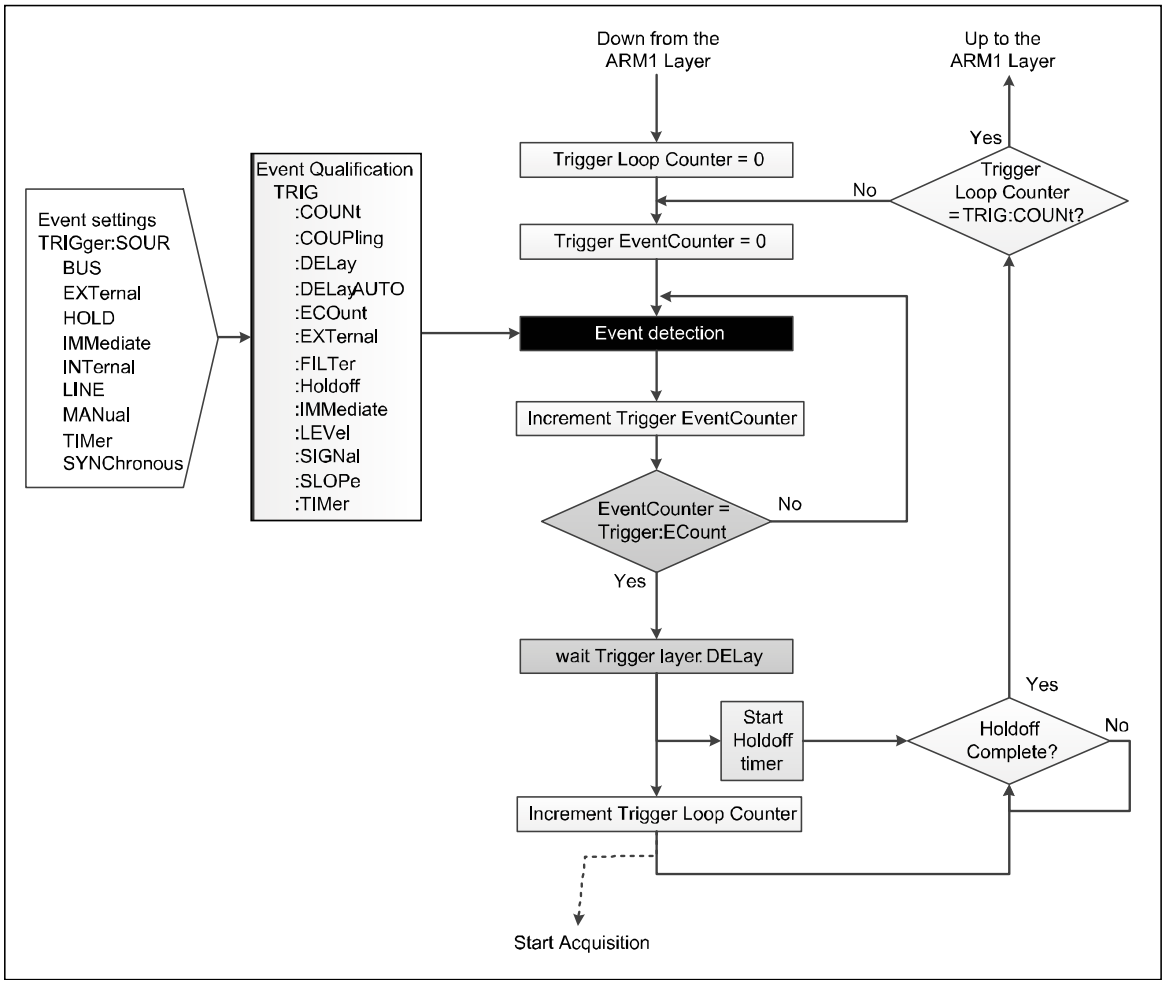

iei102.emf

Figure 28. Trigger Layer without Special Events

Note

The Trigger layer, as well as the Arm2 and Arm1 layers, have Special Events not shown in Figure 28*, available through the SCPI remote commands. The Special Events are described in* Special Event Qualifiers*.*

The power-on default trigger event in the Arm2, Arm1, and Trigger layers is Immediate, which provides automatic continuous triggering. With all three of these layers set to Immediate, no other discrete trigger event is required to obtain a reading as long as the Initiate layer is to Continuous ON. With the Initiate layer set to Continuous OFF, the occurrence of any Event in any of the other layers has no effect. The Trigger subsystem remains in the Idle state unless **TRIG** is pushed or the remoted command INIT:IMM is sent (described later).

The settable triggering events are:

- **Immediate**: No wait at the Event detector. This is the default state for all layers and effectively allows the Product to take readings continuously in the free-run mode. This is the power up default setting for all functions except for Digitize and RF Power.
- **External**: Waits for a trigger edge input to the rear panel BNC connector. The type and polarity of the edge is by default negative going TTL. Selection of edge type is described below.
- **Bus**: Waits for a remote interface trigger command (*TRG or GET) from the controlling computer
- **Hold**: Puts the Trigger subsystem in a suspended state, no readings are taken. Hold pauses the Product from any signal acquisition until taken out of that mode. Note that the “Hold” event is not related to “Holdoff” described later.
- **Internal**: Waits for the input signal to reach a certain level on either the positive or the negative going edge. Setting up the point (level) on the signal is described below. Other digital multimeters may refer to this event parameter as “LEVEL” or “ATrigger”.
- **Line**: The Event is satisfied synchronously with the line frequency. If the acquisition time (the time it takes to complete a reading) is less than the period of the line frequency, readings will occur at the line frequency. If the acquisition times are longer than the period of the line frequency, readings will be triggered at multiples of the line frequency period. For example, given a long enough acquisition time, a 60 Hz line may result in triggering at 30 Hz or 20 Hz.

- **Manual**: Push TRIG to satisfy the Event. Manual is not the same as pushing RUN/STOP since Manual is an event setting for the Arm2, Arm1 and Trigger layers, whereas RUN/STOP affects the Initiate layer. The behavior of TRIG is different in Manual than it is when RUN/STOP is pushed to set the Initiate layer to Continuous OFF. If the Product is in the Idle state, where the Initiate layer is set to Continuous OFF, and the Trigger layer is set to Manual, the first push of TRIG causes the system to exit from Idle. A second TRIG push is required to satisfy the Trigger Event, and then a reading is taken.
- **Synchronous** - Remote control only. The Event is satisfied when the Product output buffer is empty and the Product requests data.
- **Timer:** Waits until the Timer period has elapsed. Allows the Trigger subsystem to make readings at a specific time interval. On the first pass through the event detector that is set to Timer, Timer acts like Immediate, that is, the process does not wait at the event detector. If Count at that layer is greater than one, on the second and subsequent loops, the process will wait at the event detector until the Timer period has elapsed. This behavior allows Timer to space readings with a specific time interval, where the first reading comes “immediately” and subsequent readings are at the specified Timer interval. If the Timer interval is less than the time the process takes to return to the detector, there is no wait. The Timer interval is reset as the process exits that layer on the upward path. There is one exception to this rule: If Continuous is ON and all layers above the layer with event Timer have event set to Immediate, the Timer is not reset. Readings will occur at the specified Timer interval as if that layer had an infinite Count. An example is to set the Trigger layer event to Timer, with a 10 second interval, leaving the other two layers above it in their default event state of Immediate. With this triggering setup, the first reading comes “immediately” and subsequent readings are spaced 10 seconds apart.

From the point of view of the front panel user, only Immediate, External, Internal, Line, Manual, and Timer event settings are relevant, as all the others involve remote interface activity.

Along with settable triggering events, Arm2, Arm1 and Trigger layers each has a Loop Counter (Count) of how many times the layer will repeat. These counts nest, such that the full Trigger layer Count will occur for each Arm1 layer Count, and so on. The total number of measurements made will be the product of the Count values of all three layers.

Each layer has an Event Counter (ECount) value, which requires the specified event to occur that number of times before the Trigger subsystem reaches the Delay block in that layer.

Each layer has a Delay value to insert a specific pause after the event in that layer has been satisfied. These delays default to “Auto” which, from the perspective of the front panel user, can be treated as zero.

Note

The Arm1 and Arm2 layer "Auto" delays are always zero. The Trigger layer "Auto" delay can be a finite value, based on the signal-path configuration, but no delay may actually be experienced. For example, the Auto delay begins when a signal path configuration is changed and expires before the Trigger subsystem reaches that point in the cycle. In that case zero delay will occur.

Trigger Setup Menu

The initial Trigger Setup menu is organized for easy access to the Trigger layer, which is the layer prior to the actual signal acquisition. Push TRIG SETUP to set the parameters found in *Details of the Triggering Subsystem*. A wide variety of triggering operations can be performed by controlling the Trigger layer alone, leaving the other layers in their default state. Access to the complete triggering subsystem (Initiate, Arm2, Arm1 and Triggering layers) is through the F5 (**Extended Settings**) softkey.

Note

Given the complex nature of the triggering subsystem, when a specific triggering setup is desired, pushing the Reset to Defaults softkey first is recommended before any parameters are set.

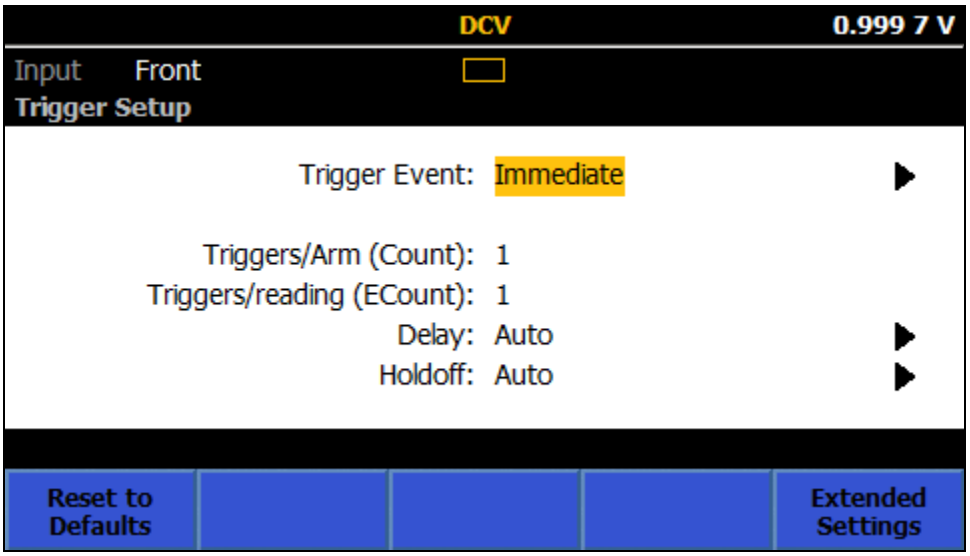

iei031.png

The first row of the Trigger Setup screen, Trigger Event, determines which of the settable events are used to affect triggering in the Trigger layer. The default event setting is Immediate which gives continuous, automatic triggering.

The second row of the Trigger Setup is context sensitive, and may or may not have information, see the screen below:

The event settings that have additional information, and settable parameters are:

External: Triggering is based on the signal that appears at the Product's rear panel **TRIG IN** BNC connector. The available settings are made with SELECT, and are TTL Negative, TTL Positive, Bipolar Negative, and Bipolar Positive. The External Trigger Edge default is TTL Negative.

Internal: Triggering is based on the level of the analog input for DCV, ACV, DCI, ACI, Ohms and Digitize. Internal can be used for frequency (based on the amplitude of the voltage or current) if the front or rear panel input terminals are used. Triggering occurs each time the input signal reaches a certain level on either the positive or the negative-going edge. The settable parameters are Coupling (AC or DC), Level (as a % of Range, up to ±200% of Range), Slope (+ or -), and Filter (On, Off). Filter On inserts a 70 kHz filter into the trigger signal path. See the screen below.

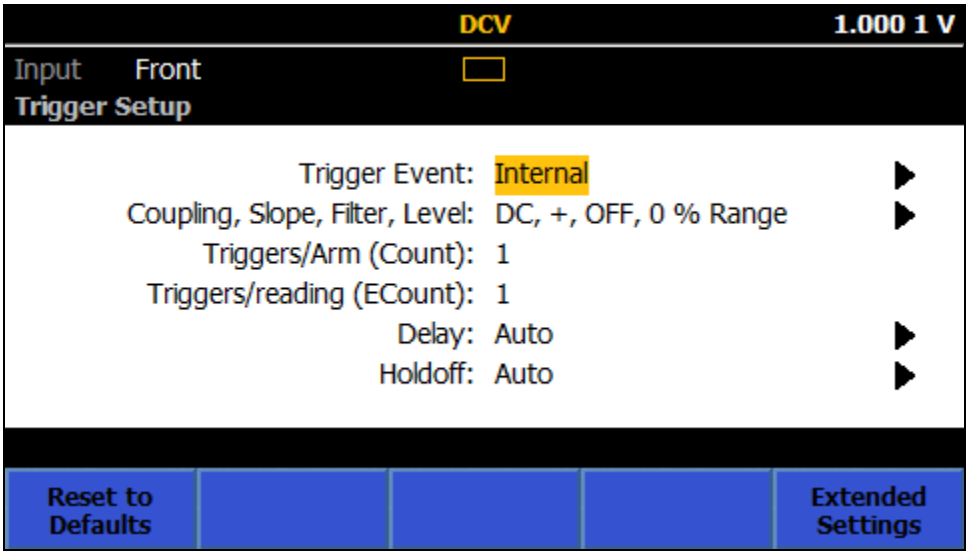

iei028.png

Timer: Triggers at a pre-set rate. If Count is greater than one, the Timer setting applies to reading two onwards. This allows Timer to space readings with a specific time interval, where the first reading comes “immediately” and subsequent readings are at the specified Timer interval. See *Examples of Using the Triggering Subsystem*. Timer controls the start of acquisitions and is not the delay between the end of one acquisition and the start of another (see *Delay*).

The other rows of the Trigger Setup menu are:

Triggers/Arm (Count): The default setting is one and is the number of readings per Arm event in the Trigger layer. Count determines how many times the triggering process circulates around the Trigger Layer before exiting back upwards towards the Initiate layer.

An example of using Count would be if you need to capture and plot a burst of 100 points on an input wave form. With Triggers/Arms (**Count**) set to 100, push RUN/STOP to put the Trigger subsystem into Idle. Push TRIG . The Trigger Loop Counter is incremented to one on the first pass. In the upward pass the Trigger Loop Counter value is compared with the Count setting. The process remains in the Trigger layer until the Loop Count reaches the Count setting. When Loop Count reaches Count (and 100 readings are made), the process exits the Trigger layer, returning back to the Initiate layer.

Details of the Trigger subsystem in this example: After you push TRIG , the triggering process leaves the Initiate layer, passes through the two ARM layers (which are each set to Immediate by default) and enters the Trigger layer. As the event is set to Immediate (default), there is no need for a discrete Event to occur and the process moves downwards to start an acquisition. The Trigger Loop Counter is incremented on the way down. In the upward pass the Trigger Loop Counter value is compared with the Count setting. The process remains in the Trigger layer until the Loop Count reaches the Count setting. When Loop Count reaches Count, the process exits the Trigger layer upwards, through ARM1 and ARM2 to the Initiate layer. The system remains in Idle until TRIG is pushed again.

Triggers/reading (ECount): The default for Event Count (ECount) is one. ECount determines how many trigger events are required to cause one reading to be taken.

An example of using ECount would be if you need to trigger accurately at a 2 MHz rate when digitizing. You use a 10 MHz off-air-standard to provide an accurate frequency source. The external trigger signal must be divided by 5 to achieve the desired 2 MHz rate. Set ECount to 5. Set Trigger Event to External. Set edge type to TTL Negative (or Positive), and apply the 10 MHz signal to the rear panel TRIG IN BNC. The Product now makes readings at a 2 MHz rate (with a 500 ns interval), making readings on every fifth conforming trigger edge.

Details of the Trigger subsystem in this example: When a conforming event is detected, in this case TTL pulses, the Trigger Event counter is incremented. If the Trigger Event Count is less than ECount, the process flow loops back to the event detector. Looping continues until the Trigger Event Counter equals ECount when the process flow continues down to trigger an acquisition.

Delay: This is the time to wait after a trigger event before initiating the acquisition. The default setting of AUTO sets a delay sufficient to allow the measurement circuit to settle for that function and range, and after a configuration change. The automatic delay is variable and Product configuration dependent. Delay can be manually set for a fixed time of 30 ns to 4,000,000 seconds. Resolution is 10 ns for delays up to 40 seconds.

An example of using Delay would be if you are making a sensitive high-value Ohms measurement. You would want to start the measurement manually and have sufficient time to exit from the surrounding area. Assume the Trigger subsystem is in the default state to start with so that the Trigger Event is set to Immediate. Set Delay to a suitable value, for example 20 seconds. Push RUN/STOP to set the initiate layer to Continuous OFF. The Product is now in the Idle state. Push TRIG to start the measurement sequence.

Details of the Trigger subsystem in this example: When TRIG is pushed, the triggering process leaves the Initiate layer, passes through the two ARM layers (which are each set to Immediate by default) and enters the Trigger layer. As the event is set to Immediate (default), there is no need for a discrete event to occur and the process moves downwards to the delay block. After the 20 second delay the process continues downwards and the acquisition is triggered.

Holdoff: This causes the Trigger layer to pause for the set time after an acquisition is initiated. This allows the acquisition to complete before the system becomes available to accept the next trigger. The default Holdoff setting is Auto, which allows the acquisition to complete before the system becomes available to accept the next trigger in any given function and range. For most cases, leaving Holdoff in Auto is recommended, to prevent “Trigger too fast” errors. Holdoff can be set manually to between 0 seconds and 100 seconds; setting Holdoff to 0 seconds can yield the fastest measurement rate. Holdoff is not available in the Arm2 and Arm1 layers.

An example of using Holdoff would be if the Trigger layer event is set to External and triggers are being divided with ECount greater than 1. In the example using ECount above, the required read rate is 2 MHz. ECount is set to five to divide triggers by five. The Trigger layer cycle time must be less than 500 ns. The acquisition time is 400 ns so Holdoff must be set to less than 100 ns.

Note

At first glance it may seem the Delay example or the ECount examples above could be achieved with just using trigger Holdoff. In the case of Delay, this would not work correctly because Holdoff is implemented after the acquisition was triggered, while Delay occurs before the acquisition. It would seem the ECount would work if Holdoff was set appropriately but this is not a good alternative as Trigger too Fast *errors could be reported if the Holdoff time was not exactly matched to the 10 MHz clock input.*

The Trigger Setup menu has these softkeys:

F1 (**Reset to Defaults**): sets all trigger parameters in all the event layers to the power-on default. If the setup of the triggering subsystem is uncertain, Reset to Defaults provides a fast way to return the subsystem to a known condition.

F5 (**Extended Settings**): provides access to all four of the trigger layers, the Initiate layer and the event layers, Arm 2, Arm 1 and Trigger. When pushed, the **F5** (**Extended Settings**) provides menus to the Initiate and each of the three trigger layers. See the screen below:

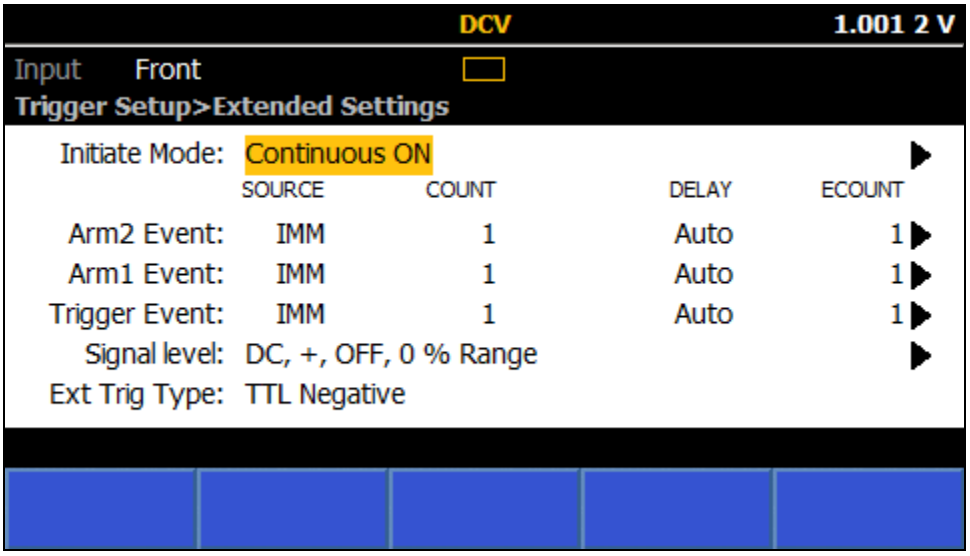

iei029.png

The first row in Extended Settings is the Initiate Mode.

Initiate Mode: When selected, the Initiate Mode has the choice of Continuous ON or OFF, or Epoch. Continuous ON sets the triggering subsystem to the free-run mode. Continuous OFF sets the triggering subsystem to the Idle mode.

Setting the Initiate mode to Continuous OFF is similar to pushing **RUN/STOP**, with a slight difference: When **RUN/STOP** is pushed, the Initiate mode is put into Continuous OFF and all Trigger subsystem activity is aborted. Selecting Continuous OFF in the Extended Settings menu does not stop trigger activity already in progress.

Select Epoch to setup triggering based on the real-time clock of the Product. Epoch mode is an extension to the SCPI remote trigger model. Epoch mode can be used to change the Initiate layer from Continuous OFF to Continuous ON at a particular date/time and then back to Continuous OFF at a later date/time. Epoch behavior depends on the current Initiate Mode state. If Continuous is set to ON, the Epoch start time has no effect. At Epoch stop time Continuous is set to OFF. If at Epoch start Continuous is OFF, then Continuous becomes ON at Epoch start and back to OFF at Epoch stop time. See the screen below:

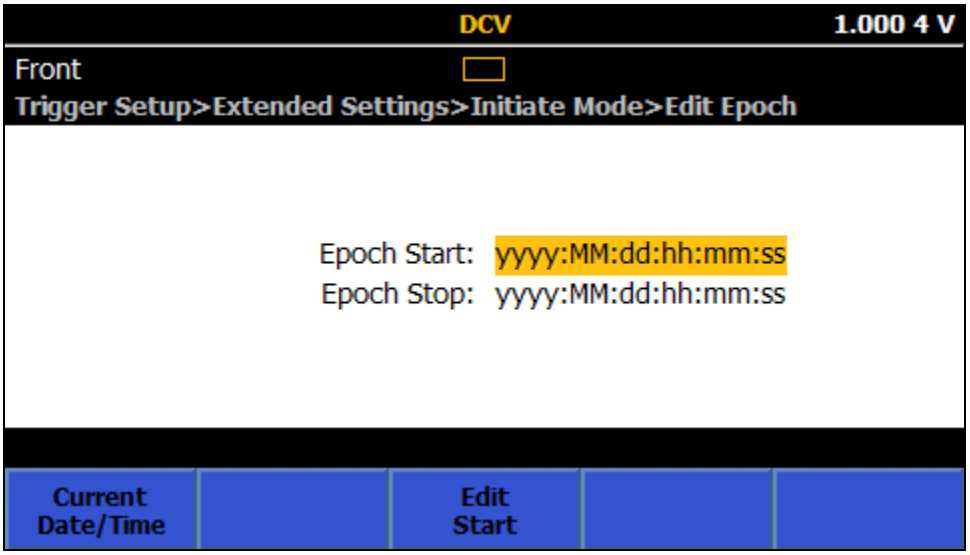

iei030.png

Epoch start and stop times are ignored unless they are in the future when the Continuous state is changed. For example, if Continuous is set to ON at exactly the Epoch stop time, Epoch Stop is ignored and continuous remains ON.

RUN/STOP switches between Continuous ON and OFF no matter what the Epoch settings are. **TRIG** will have no effect if Continuous is ON. If continuous is OFF, pushing **TRIG** exits from the initiate layer irrespective of Epoch settings.

To better understand the Initiate settings, see the equivalent SCPI remote commands in Table 24.

Table 24. SCPI Initiate Commands

Command	Action
INITiate:CONTinuous ON	When the current trigger cycle is complete, the Trigger subsystem immediately commences another trigger cycle without entering the Idle state. If the system is in the idle state when Continuous is set to ON, the idle state is immediately exited and the system traverses to the ARM2 layer.
INITiate:CONTinuous OFF	When the current trigger cycle is complete the subsystem enters the Idle state. The Trigger subsystem remains in the Idle state until the command INIT:IMM is sent.
INITiate:EPOCh start>, <stop>	Continuous ON occurs at <start> date and time. Continuous OFF occurs at <stop> date and time.
INITiate:IMMediate	This command causes exit from the Idle state. One full trigger cycle is completed returning to Idle on completion. If the Trigger subsystem is not Idle or if Continuous is set to ON, error -213 is generated.

The next three rows in Extended Settings control the parameters in the Arm2, ARM1, and Trigger layers. Each of the parameters in Arm2 and Arm1 are identical to the Trigger layer (described above) with the exception of Holdoff which is available in the Trigger layer only.

The last two rows of Extended Settings are Signal level and Ext Trig Type. Signal level parameters are applicable when the trigger event is set to Internal. Ext Trig Type parameters are applicable when the trigger event is set to External. The Signal level and Ext Trig parameters can be set in any layer but will always be the same for all layers.

Trigger Indicator

All functions have a trigger indicator as shown in the figure below.

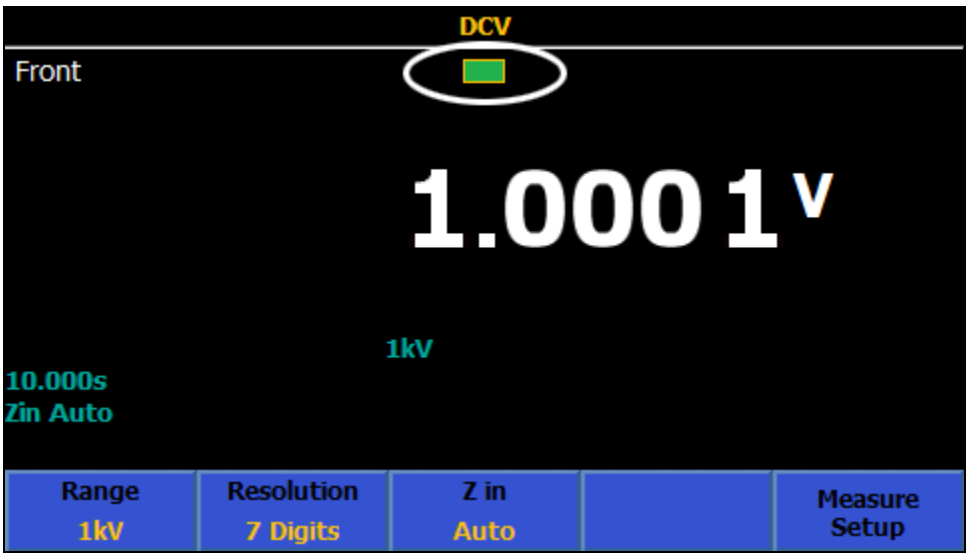

iei189.png

The trigger indicator shows various triggering states as shown below.

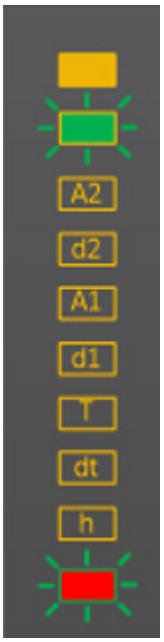

iei345.png

Idle state, waiting for initialization

Triggered

Waiting at the Arm2 event detector

Arm2 delay in progress

Waiting at the Arm1 event detector

Arm2 delay in progress

Waiting at the Trigger event detector

Trigger delay in progres delay in progress

Holdoff in progress

Trigger too fast or Measure too fast

Examples of Using the Trigger Subsystem

General Examples

The default trigger state can be modified with just a few parameters to cause the measurements to occur on other conditions. For example, from the default power-on state, in Trigger Setup, set the Trigger event to External. Now readings will only be taken when (by default) a negative-going TTL edge is detected on the rear panel TRIG IN BNC. The External Trigger Edge field allows selection of different polarity and level.

A common setup may be to select a trigger event of Timer. In Trigger Setup set the Timer period to the desired time between the start of each measurement. Make sure the measurement takes less time than the specified period. Alternatively, select Line as the trigger event. Measurements will now be taken synchronously with the power line. If the measurement takes more than 1 PLC to complete, the next measurement is started synchronously with the next available power line cycle.

Another possibility for trigger event is Internal. This will monitor the signal applied to the terminals and wait for it to pass a threshold in a specific direction. By default, this is set as a positive-going transition across the zero point of the range. Every time the applied signal does this, a measurement is started. The polarity and level of the threshold can be modified, as well as applying a filter and ac/dc coupling to the monitored signal. This trigger event type is more useful when combined with other facets of the Trigger subsystem. For example, the trigger Count can be changed to vary the number of measurements captured for each cycle of the Trigger subsystem.

Specific Examples

The subsequent examples are provided to give a better understanding of the Trigger subsystem, and to highlight key aspects. As you try each example, see the flow diagrams Figures 27 and 28 to understand what the subsystem is doing. Use the Statistics mode to clearly see when readings are first taken, how many readings are taken, and when the reading buffer is cleared. Activate Statistics by pushing ANALYZE .

Each of the examples assume dcv mode, but are in most cases more generally applicable.

Example 1

Measurement: Take a number of measurements after a delay. Take 10 measurements each time you push TRIG and have the Product wait 5 seconds after the key push so that you can get away from the sensitive measurement setup.

Solution: From the trigger default state, push RUN/STOP to stop readings. In the Trigger Setup menu, set the Triggers/Arm (Count) to 10. Under the Extended Settings, set the Arm1 delay to 5 seconds. Push TRIG to take the Trigger subsystem out of Idle. The Trigger subsystem waits 5 seconds, takes 10 readings, and then stops.

This works by enforcing a delay in a layer prior to the one where the 10 readings are then captured.

Example 1b

Measurement: Example 1 discards the previously captured readings for each push of TRIG, as noted by Rdgs in the Statistics function, which starts from 0 with each push of TRIG.

If the requirement is to accumulate a set of readings with each push of TRIG, use the 1b solution below.

Solution: From the Trigger Setup, push F1 (**Reset to Defaults**). Do not push RUN/STOP because you want the Initiate layer to be in Continuous ON. Set the Triggers/Arm (Count) to 10 as in Example 1. In the Extended Settings, set the Arm1 event to Manual, and the Arm1 Delay to 5 seconds. With each push of TRIG, the Trigger subsystem waits 5 seconds, and takes 10 readings, accumulating each set of 10 readings. (Note the Rdgs count in Statistics with each push of TRIG.)

This works by having the TRIG key as a layer source Event, rather than using it for the Trigger subsystem initiation as in Example 1. Leaving the Initiation layer in Continuous ON means the Trigger subsystem remains in the free-run, initiated state. Since it is the initiation event that discards the previous readings, they are retained on subsequent cycles.

Note

Setting the trigger event to Manual in the trigger layer, instead of the Arm1 layer, will not give 10 readings with each push of TRIG. TRIG *must be pushed 10 times to get 10 readings.*

Examples 1 and 1b use the Arm1 and Trigger layers. Since the object was merely to have the delay before the count, any two layers could have been used provided the delay was in the one that comes earliest in the Trigger subsystem sequence (Arm2 -> Arm1 -> Trigger). Although in the example given it makes no difference, when operating at the maximum speeds supported by the Digitize function, starting at the Trigger layer and working up to Arm1 and Arm2 as required will give the best performance.

Example 2

Measurement: Take measurements at a specific, accurate period. The Product should make 10 measurements with a 100 ms aperture at 1 second intervals.

Solution: In DCV Measure Setup, set the reading aperture to 100 ms (**F5** (**Measure Setup)** > Manual > **F2** **(Edit Time)** > 0.1 s). In Trigger Setup, push **F1** (**Reset to Defaults**) and then **RUN/STOP** to stop readings. Set Trigger event to **Timer** and the Timer interval (2nd row of the Trigger Setup menu) to 1 second. Set the Triggers/Arm (Count) to 10. Push **TRIG** to start the capture, where a reading is taken every second. After 10 readings it stops. Pushing **TRIG** again discards the previously captured readings, as seen with Statistics enabled.

This works by using the Timer as the event source, causing measurements at the set interval. The time taken to make a measurement must be less than the set interval. Minimum trigger interval varies with function and aperture setting. See *Specifications*.

Example 2b

Measurement: Repeat *Example 2* process every minute for 5 minutes.

Solution: From the setup in *Example 2*, set the Arm1 event to Timer, set the Arm1 Timer to 60 seconds and the Arm1 Count to 5. Each push of **TRIG** results in five bursts of 10 captures over the course of 5 minutes and 10 seconds, for a total of 50 measurements. Note that examples 2 and 2b put the system's Initiate layer in Continuous Off, so that each push of **TRIG** discards the previously captured readings.

This works by nesting the trigger layer activity inside the Arm1 count. Since the requirement is to have each burst of trigger activity a specific interval apart, a timer in the Arm1 layer controls this interval.

Example 3

Measurement: Use an external trigger signal (applied to the rear panel TRIG IN BNC connector) to make a burst of 1000 measurements of aperture 500 µs at intervals of 1 ms.

Solution: Push **F1** (**Reset to Defaults**) in the Trigger Setup menu, and then set the Trigger Event to Timer with a Timer period of 1 ms. Set the Triggers/Arm (Count) to 1000. Set the Arm1 event to External. Set aperture to 500 µs. Each occurrence of the external trigger signal (at the TRIG IN BNC on the rear panel) will make a burst of 1000 measurements, accumulating each burst.

This works by causing the Trigger subsystem to wait in the Arm1 layer until the external trigger event occurs. Once it does, the Trigger Count and Timer control the measurements. Since the system is in the Continuous ON mode, completion of the capture immediately returns to the waiting state in Arm1.

Example 4

In the examples so far, the Holdoff setting has been left as Auto. This causes the Trigger subsystem to wait for a measurement to complete before it continues around the loop, making operation generally more intuitive. However, in some cases this may not be the desired behavior.

Measurement: An external 1 MHz signal is being applied to the rear panel TRIG IN BNC and the requirement is to make measurements synchronously with this signal, but at a rate of only 10,000 measurements per second.

Solution: From defaults, set the Trigger Event to External and the Triggers/reading (ECount) to 100. Set the Holdoff to zero. The aperture must be short enough to support 10,000 measurements per second, for dcv a suitable value would be 50 µs.

This works by requiring 100 cycles of the external trigger signal for each measurement made. However, it must count all incoming cycles and not ignore those during the measurement/holdoff period. Setting Holdoff to zero value makes the Trigger subsystem independent of the measurement process.

Example 5

Measurement: Measure the overshoot of a (slow) rising edge, which may or may not have ringing.

Solution: Set the DCV aperture to 1 s. In Trigger Setup, set Trigger Event to Internal, + slope, 90% of Range. Set the Holdoff to 10 seconds to ensure any ringing is ignored. When the analog input reaches 90% of range, the triggering subsystem makes one measurement, then waits for the remainder of the holdoff time before waiting for the next event.

This example uses long time intervals to illustrate the timing between holdoff and the start of an acquisition. The Trigger subsystem waits for the rising edge, makes a measurement, but then remains in the holdoff state for 9 more seconds (10 since the measurement was began) before returning to wait for another rising edge. Any ringing that occurred during that time would have been ignored. In practice, this measurement is better made with a 10 second timer event in Arm2 or Arm1 instead of using holdoff, as holdoff is typically used to eliminate “Trigger too fast” errors. Furthermore, the exact point in the Trigger subsystem at which the holdoff timer is started is device dependent, and may be different in other products.

Example 6

Measurement: Wait for the applied signal to fall below 12 V, then make a series of measurements 3 times by delaying for 200 power-line cycles (PLC), followed by making 10 measurements at intervals controlled by an external trigger signal, for a total of 30 measurements.

Solution: Use the 10 V dc range. From defaults, in the Trigger Setup menu, set the Trigger Event to External and the Triggers/Arm (Count) to 10. Under Extended Settings, set the Arm1 Event to Line, the Arm1 Count to 3 and the Arm1 Event Count (ECount) to 200. Set the Arm2 event to Internal, with a Level threshold of 120% and negative slope. Apply an external signal of 5 V pk, 1 kHz to the TRIG IN BNC. Apply 15 V dc to the 10 V dc range. Change the 15 V dc input to 11 V dc. Three groups of 10 readings are made, with a delay between each group of 10 readings, for a total of 30 readings. If you enable the Statistics function (Analyze > Statistics), you can clearly see the reading count in groups of 10 readings, stopping at 30 readings.

This works by having the first layer (Arm2) wait for the signal to fall below the threshold, after which the Arm1 layer will count 200 power line cycles before allowing the Trigger layer to make the 10 externally controlled measurements. The count of 3 in the Arm1 layer causes the 200 PLC delay and 10 reading capture to occur three times. The triggering then stops because there was only one occurrence of the Arm2 event (input falling to < 120% of range).

Example 7

Measurement: Measure the upper and lower levels of a continuous 1 Vpk 1 kHz square wave accurately.

The ~500 µs duration of the levels makes it difficult to obtain an accurate, noise-free measurement. There may be some overshoot and ringing after the edge. To resolve this, the Product triggering can be set to make a number of measurements at the topline and baseline of the square wave, using Statistics to show the average of the 5000 readings. In this example, the triggering subsystem is configured to detect an edge on the main analog input, wait 100 µs, make a 200 µs aperture measurement, and repeat that process 5000 times to give a combined measurement aperture of 1 second.

Solution: From defaults, push **RUN/STOP** to stop readings. Set the Trigger Event to Internal, positive going at 0 % of range, dc coupled, no filter. Set the Triggers/Arm (Count) to 5000. Set the Trigger Delay to 100 µs. In the DCV function, set the range to 1 V and the aperture to 200 µs under Measure Setup. Push **TRIG** to capture the measurements. With the Statistics function enabled, you can see the accumulation of the 5000 readings, and the average of these readings (which is the topline of the square wave). To measure the lower level, change the threshold polarity to negative in the Trigger Setup menu.

Note

An alternative method to see the average of 5000 readings is to use the Math function to set a Block Average of 5000 readings. With Block averaging set, the display shows one reading for every trigger, the value being the average of 5000 individual 200 µs measurements, representing the topline of the applied square wave. As usual, **RUN/STOP** *can be used to make this a continuous measurement. If continuous were the desired behavior originally, the Trigger/Arms Count is irrelevant in this particular example and could have been left at 1. The MATH is performing the count.*

Example 8

Measurement: Starting at midnight on 5th October 2018 you want the Product to take a group of 50 readings spaced at 30 second intervals starting on the hour for 3 days. The Product is in the default trigger mode (free-run) and remote commands are used instead of the front panel.

Solution: Use the Epoch mode to set the start and stop times. When Epoch is the selected Initiate mode, Initiate is Continuous OFF outside the Epoch times, Continuous ON between them.

The Trigger layer Timer is set to 30 seconds to determine the spacing of the individual readings. Starting from the default state the bus commands are:

TRIGger:SOURce TIMer

TRIGger:TIMer 30

TRIGger:DELay 0

The Trigger layer Count is set so 50 readings are taken before exit upwards from the Trigger layer into the Arm1 layer.

TRIGger:COUNt 50

Arm1 layer Timer is set to 3600 seconds (1 hour)

ARM1:TIMer 3600

The Epoch start is set to the start time of midnight on 5th October 2018. The end time is set just after the last hourly sequence starts.

INIT:EPOCh 2018:10:05:00:00:00, 2018:10:07:23:01:00

The sequence is:

At midnight on 5th October 2018 the trigger process leaves the Initiate layer and passes (without a delay) through the ARM2 layer which is set at its defaults. As the ARM1 source is Timer, the process continues down through the Arm1 event detector starting the Arm1 Timer and incrementing the Arm1 layer loop counter on the way.

The Trigger layer Timer starts as the process passes through the Trigger layer Event detector. The trigger layer Loop counter is incremented and the first of the reading acquisitions is triggered. The Trigger layer loop count (1) is less than Count (50) so the upward process flow is diverted back through to the Trigger layer Event detector. The process pauses at this point until the 30 second Timer expires and another reading is triggered. This loop repeats until the Trigger layer Loop counter equals Count (50) at which point the process flows up to the Arm1 layer.

Arm1 layer Loop Counter (1) equals Arm1 layer Count so the flow continues upwards through Arm2 back to the initiate layer. The process so far has taken 50 x 30 = 1500 seconds = 25 minutes so the time is 2018:10:05:00:25:00. This is less than the Epoch expiry so the process goes back down through Arm2 and waits at the Arm1 Event detector until Arm1 Timer (3600 seconds) expires 35 minutes later at 2018:10:05:01:00:00. The process enters the Trigger layer to begin the second group of 50 readings and the 3 day process continues.

At 2018:10:07:23:00:00 the Arm1 Timer expires at the start of the final circuit around the Trigger subsystem. 25 minutes later the last group of 50 readings has been gathered and the process flow returns to the Initiate layer. This time the Epoch has expired so the system stops taking readings.

Special Event Qualifiers

Two special qualifiers can be sent remotely to bypass the Trigger Event Detector irrespective of the Event specified by the 8 trigger events described above. (The 8 trigger events are parameters of the TRIGger:SOURce command.) These qualifiers are not available from the front panel (in Local control). The two ARM layers also implement the same special qualifiers. See Figure 29.

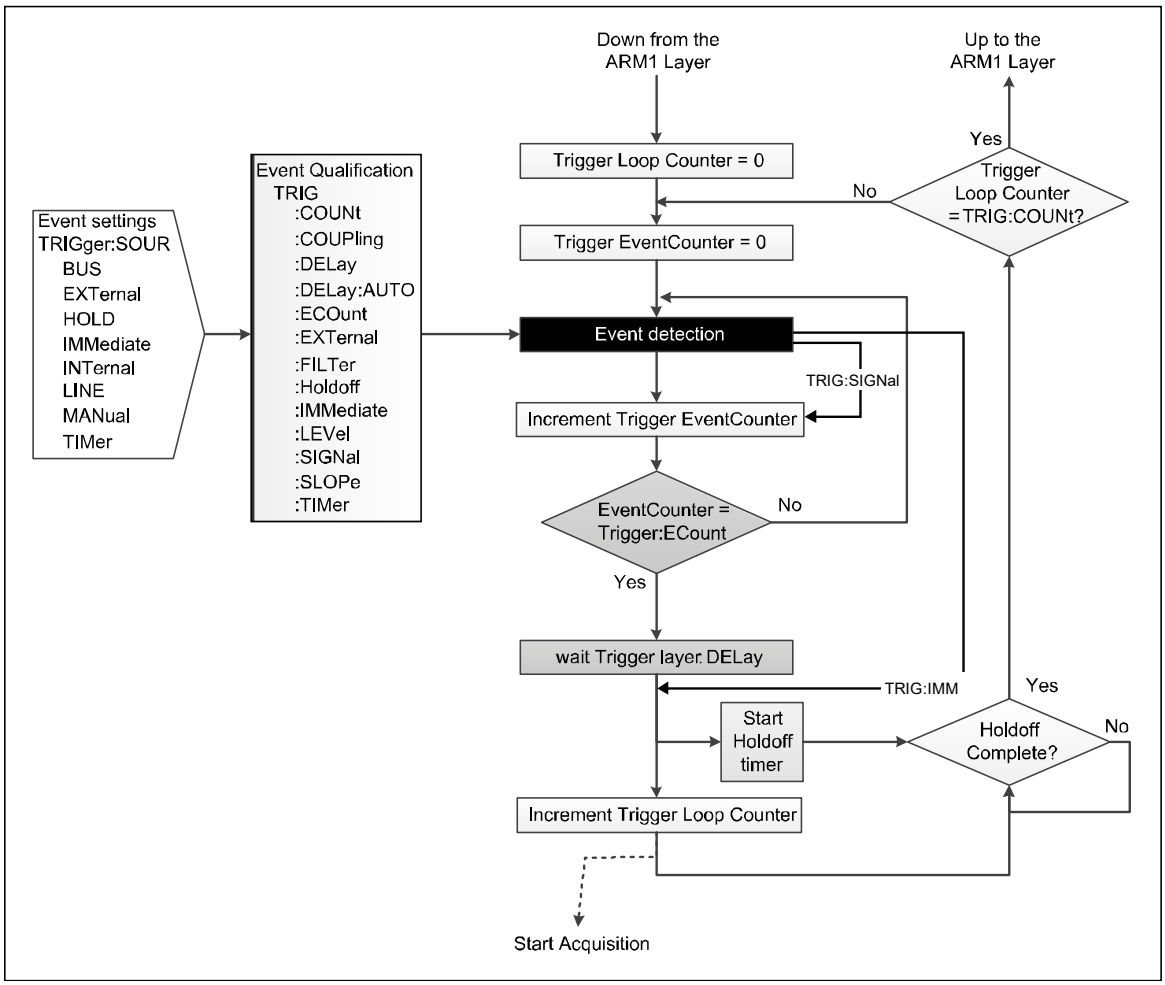

Figure 29. Trigger Layer with Special Events

TRIGger:SIGNal causes immediate exit from the trigger layer Event Detector. The process flow rejoins immediately below the Event Detector. TRIGger:SIGNal is a one-time command that does not modify any settings. The ARM2 command is ARM2:SIGNal, and ARM1 is ARM1:SIGNal.

TRIGger:IMMediate causes immediate exit from the trigger layer Event Detector. The process flow rejoins immediately below the Delay block. TRIGger:IMMediate is a one-time command that does not modify any settings. The ARM2 command is ARM2:IMMediate, and ARM1 is ARM1:IMMediate.

Examples of the use of Special Event Qualifiers

You have set up a system to make a series of DCV measurements if the input signal reaches 0.9 V and continue to take measurements until the level reduces below the threshold. The input signal is a varying DC voltage. The Initiate layer is set to Continuous ON, the ARM layer events to Immediate. The Trigger layer is setup to start taking measurements when the input signal reaches the preset level. The required level can be manually set within the Trigger Setup menu. The remote commands (from the default) are:

TRIGger:SOURce INT

TRIGger:LEVel 0.9

TRIGger :SLOPe POSitive

You have no control of the signal level to set the level above 0.9 V so you cannot do a quick check that everything is correctly configured. To test that the system will take measurements as required, you can send a special event qualifier remote command to take one measurement:

TRIGger:SIG

The default Delay will be executed before the reading acquisition triggers. To override the Delay, you would send TRIGger:IMMediate. Note that TRIGger:IMMediate is not the same as TRIGger:SOURce IMMediate.

Guidelines to Avoid Measurement Errors

To avoid errors, see Table 25.

Table 25. Guidelines to Avoid Errors

Sources of Inaccuracy	Avoiding or Minimizing Inaccuracy

Thermal EMFs can cause series (Normal) mode interference, particularly where large currents have a heating effect at junctions. In otherwise thermoelectrically-balanced measuring circuits, cooling caused by drafts can upset the balance.	Screen thermal junctions from drafts.
	• Before taking readings allow time for thermal equilibrium to be reached.
	• Use conductors, joints and terminals with a good margin of current-carrying capacity.
	• Avoid thermoelectric junctions where possible:
	  o Use untinned single-strand copper wire of high purity.
	  o Avoid making connections through Nickel, Tin, Brass and Aluminum. If oxidation is a problem, use gold-plated copper terminals, and replace the terminals before the plating wears off.
	  o If joints must be soldered, low-thermal solders are available, but crimped joints are preferred.
	  o Use low-thermal switches and relays where they form part of the measuring circuit.
	  o Balance one thermal EMF against another in opposition, where possible. (Switch and relay contacts, terminals, etc.)

Table 25. Guidelines to Avoid Errors (cont.)

Sources of Inaccuracy	Avoiding or Minimizing Inaccuracy
EM Interference - Noisy or intense electric, magnetic and electromagnetic effects in the vicinity can disturb the measurement circuit. Some typical sources are: • Static electric fields • Fluorescent lighting • Inadequate shielding, filtering or grounding of power lines • Transients from local switching • Induction and radiation fields of local E-M transmitters. • Excessive common mode voltages between the source and load. These disturbances can be magnified by the capacitance of your hand. Electrical interference has the greatest effect in high-impedance circuits. Separation of leads and creation of loops in the circuit can intensify the disturbances.	Choose as interference-free a site as possible (a screened cage may be necessary if interference is heavy or circuit impedance is high). Suppress as many sources as possible. • Always keep interconnecting leads as short as possible, especially unshielded lengths. • Run leads together as twisted pairs in a common shield to reduce loop pick-up area, but beware of leakage problems and excessive capacitance. • Where both source and load are floating, connect **LO** to ground at the source to reduce common mode voltages. • If an external measurement ground connection has been made, select External Guarding at the Product in Voltage and Current functions and deselect External Guarding in Ohms and PRT functions. • When connecting to a multifunction calibrator such as the Fluke 5730A or 5522A, follow the Product guarding and grounding advice and deselect External Guard at the Product.
Test Lead Resistance can drop significant voltages between the source and load, especially at high load currents.	Keep all leads as short as possible. • Use conductors with a good margin of current-carrying capacity. • Use External Guard or 4-wire connections where necessary.
Lead Insulation Leakage can cause significant errors in measurement circuits at high voltages and high resistances. Some insulating materials suffer greater losses than others, for example. PVC has more leakage than PTFE.	Choose low loss insulated leads - PTFE is preferred to PVC. When running leads together in shielded pairs, avoid large voltages between leads in the same screen, especially if using PVC insulation.

Maintenance

This section explains how to do the routine maintenance and calibration tasks necessary to keep the Product in optimal operating condition. For intensive maintenance tasks such as troubleshooting or repair, contact a Fluke Calibration Service Center. See *Contact Fluke Calibration*.

Fuse Replacement

Access the fuse from the rear panel. The fuse rating label below the fuse holder shows the correct replacement fuses. Line and neutral are fused individually. The same fuses are used for both 100 V to 120 V and 200 V to 240 V operation.

⚠⚠Warning

To prevent possible electrical shock, fire, or personal injury:

- **Turn the Product off and remove the mains power cord. Stop for two minutes to let the power assemblies discharge before you open the fuse door.**
- **Replace a blown fuse with exact replacement only for continued protection against arc flash.**
- **Use only specified replacement fuses, see Table 26.**

To access the fuse, see Figure 30:

1. Disconnect the mains power cord.
2. With a standard screwdriver, release the fuse holder door.
3. Pull out the fuse holder.
4. If necessary, replace one or both fuses.
5. Reinsert the fuse holder.
6. Close the fuse holder door.

Table 26. Replacement Fuses

Line Voltage Range	Fuse Description- Mains Fuse	Fluke Part Number
⚠ 100 V – 120 V	T1.5AH 250 V	2059740
⚠ 220 V – 240 V		
Rear Input Current Protection Fuse		
⚠ 250 V	1.6AH 250V	1582072

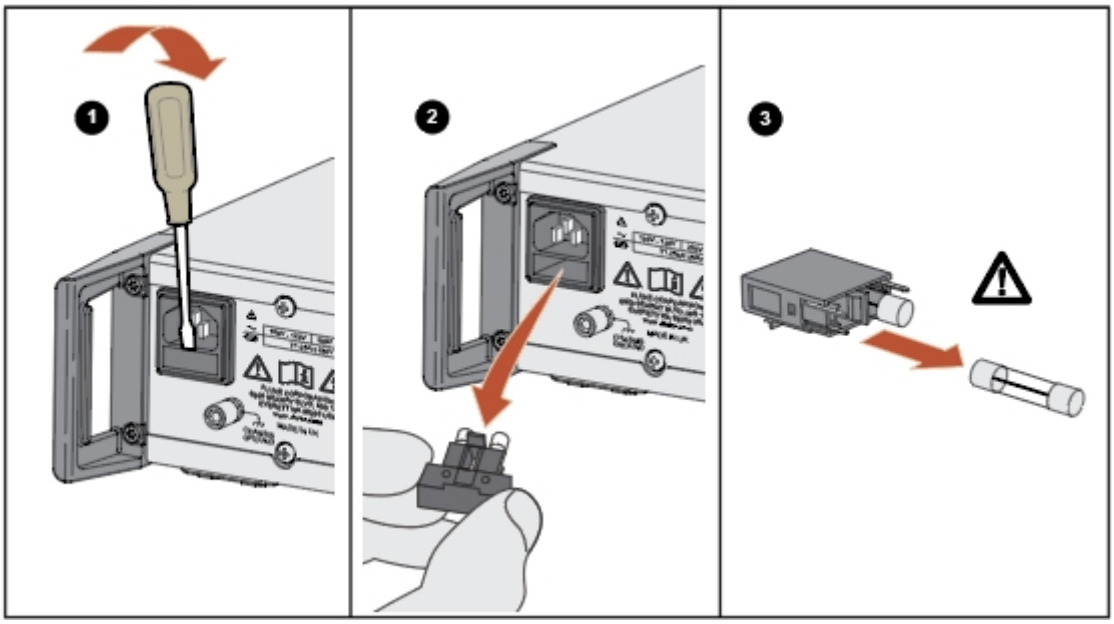

lei103.jpg

Figure 30. Access the Fuse

Clean the Exterior

To keep the Product looking new, clean the case, front panel keys, and display with a soft cloth slightly dampened with either water or a non-abrasive mild cleaning solution that is not harmful to plastics.

⚠Caution

Do not use aromatic hydrocarbons or chlorinated solvents for cleaning. They can damage the plastic materials used in the Product.

Accessories

Optional accessories for the Product are listed in Table 27.

Table 27. Optional Accessories

Model Noun	Description	Model Number
Y8588	Rack mount kit (2U – 3.5 in)	4975758
Y8588S	Slide rack mount kit	4983232
8588A/CASE	Transit Case	4964948
8588A-LEAD	Comprehensive measurement lead kit. Includes: 1x 8588A-LEAD KIT-OSP, general purpose probe kit 1x 1 m screened 322/0.1 copper (30 A rating) with 6 mm gold plated copper spade terminals,	5011135
8588A-SHORT	4-way shorting pcb	5011158
8588A-LEAD/THERMAL	Low thermal lead kit, 1.5 m two core screened low thermal cable with 6 mm gold plated copper spade terminals	5069961
8588A-7000K	Cal kit with 1 G Ω standard and connecting leads	5069977
96000SNS	R&S Power Sensor	4489668

Cal Power
Via Acquanera, 29 22100 COMO
tel. 031.526.566 (r.a.) fax 031.507.984
info@calpower.it www.calpower.it