Cal Power
Via Acquanera, 29 22100 COMO
tel. 031.526.566 (r.a.) fax 031.507.984
info@calpower.it www.calpower.it

FLUKE Calibration

# 5790B

## AC Measurement Standard

## Operators Manual

June 2015
© 2015 Fluke Corporation. All rights reserved. Specifications are subject to change without notice.
All product names are trademarks of their respective companies.

## LIMITED WARRANTY AND LIMITATION OF LIABILITY

Each Fluke product is warranted to be free from defects in material and workmanship under normal use and service. The warranty period is one year and begins on the date of shipment. Parts, product repairs, and services are warranted for 90 days. This warranty extends only to the original buyer or end-user customer of a Fluke authorized reseller, and does not apply to fuses, disposable batteries, or to any product which, in Fluke's opinion, has been misused, altered, neglected, contaminated, or damaged by accident or abnormal conditions of operation or handling. Fluke warrants that software will operate substantially in accordance with its functional specifications for 90 days and that it has been properly recorded on non-defective media. Fluke does not warrant that software will be error free or operate without interruption.

Fluke authorized resellers shall extend this warranty on new and unused products to end-user customers only but have no authority to extend a greater or different warranty on behalf of Fluke. Warranty support is available only if product is purchased through a Fluke authorized sales outlet or Buyer has paid the applicable international price. Fluke reserves the right to invoice Buyer for importation costs of repair/replacement parts when product purchased in one country is submitted for repair in another country.

Fluke's warranty obligation is limited, at Fluke's option, to refund of the purchase price, free of charge repair, or replacement of a defective product which is returned to a Fluke authorized service center within the warranty period.

To obtain warranty service, contact your nearest Fluke authorized service center to obtain return authorization information, then send the product to that service center, with a description of the difficulty, postage and insurance prepaid (FOB Destination). Fluke assumes no risk for damage in transit. Following warranty repair, the product will be returned to Buyer, transportation prepaid (FOB Destination). If Fluke determines that failure was caused by neglect, misuse, contamination, alteration, accident, or abnormal condition of operation or handling, including overvoltage failures caused by use outside the product’s specified rating, or normal wear and tear of mechanical components, Fluke will provide an estimate of repair costs and obtain authorization before commencing the work. Following repair, the product will be returned to the Buyer transportation prepaid and the Buyer will be billed for the repair and return transportation charges (FOB Shipping Point).

THIS WARRANTY IS BUYER'S SOLE AND EXCLUSIVE REMEDY AND IS IN LIEU OF ALL OTHER WARRANTIES, EXPRESS OR IMPLIED, INCLUDING BUT NOT LIMITED TO ANY IMPLIED WARRANTY OF MERCHANTABILITY OR FITNESS FOR A PARTICULAR PURPOSE. FLUKE SHALL NOT BE LIABLE FOR ANY SPECIAL, INDIRECT, INCIDENTAL, OR CONSEQUENTIAL DAMAGES OR LOSSES, INCLUDING LOSS OF DATA, ARISING FROM ANY CAUSE OR THEORY.

Since some countries or states do not allow limitation of the term of an implied warranty, or exclusion or limitation of incidental or consequential damages, the limitations and exclusions of this warranty may not apply to every buyer. If any provision of this Warranty is held invalid or unenforceable by a court or other decision-maker of competent jurisdiction, such holding will not affect the validity or enforceability of any other provision.


| | |
|---|---|
| Fluke Corporation | Fluke Europe B.V. |
| P.O. Box 9090 | P.O. Box 1186 |
| Everett, WA 98206-9090 | 5602 BD Eindhoven |
| U.S.A. | The Netherlands |


11/99

# Table of Contents


| Chapter | Title | Page |
|---|---|---|
| **1** | **Introduction and Specifications** | **1-1** |
| | Introduction | 1-1 |
| | How to Contact Fluke Calibration | 1-2 |
| | Safety Information | 1-2 |
| | Symbols | 1-4 |
| | Measurement and Transfer Modes | 1-4 |
| | An Overview of the Features | 1-5 |
| | Instruction Manuals | 1-6 |
| | 5790B Operators Manual | 1-6 |
| | 5790B Service Manual | 1-6 |
| | Service Information | 1-6 |
| | Specifications | 1-7 |
| | General Specifications | 1-8 |
| | Resolution and Range Limits | 1-9 |
| | Electrical Specifications | 1-9 |
| | Absolute AC Voltage | 1-9 |
| | Relative AC Voltage | 1-12 |
| | Absolute AC Non-sine Voltage | 1-14 |
| | Absolute DC Voltage | 1-15 |
| | Relative DC Voltage | 1-15 |
| | Secondary Electrical Specifications | 1-16 |
| | AC Secondary Performance | 1-16 |
| | DC Secondary Performance | 1-18 |
| | Operating Characteristics | 1-19 |
| | AUX Input Characteristics | 1-20 |
| | Absolute Wideband Specifications (5790B/3, 5790B/5, and 5790B/AF) | 1-20 |
| **2** | **Installation** | **2-1** |
| | Introduction | 2-1 |
| | Unpacking and Inspection | 2-1 |
| | Environmental and Input Requirements | 2-2 |
| | Placement and Rack Mounting | 2-2 |
| | Cooling Considerations | 2-3 |
| | Grounding the Product | 2-3 |

Mains Voltage Selection ..... 2-4
Connect to Mains Power ..... 2-5

**3 Features ..... 3-1**

Introduction ..... 3-1
Front Panel Features ..... 3-1
Rear Panel Features ..... 3-4

**4 Front Panel Operation ..... 4-1**

Introduction ..... 4-1
Turning on the Product ..... 4-1
Power-Up State ..... 4-2
Warmup Requirements ..... 4-2
Calibrating DC Zeros ..... 4-3
Setup Menu ..... 4-4
Setup Menu Softkey ..... 4-4
Checking Instrument Configuration ..... 4-5
System Settings Menu ..... 4-5
Setting the Internal Clock/Calendar ..... 4-6
Instrument Specification ..... 4-7
Connecting Sources to the Product ..... 4-7
Test Leads and Connectors ..... 4-8
Coaxial Inputs ..... 4-8
Dual Binding Inputs ..... 4-8
Connecting the Guard and Ground Binding Posts ..... 4-9
Guard Theory ..... 4-10
Guard Connection ..... 4-10
External Guard Connection ..... 4-12
Basic Operation ..... 4-13
Interpreting the Display ..... 4-13
Digital Filter Mode ..... 4-14
Hi Res Mode ..... 4-16
Statistics ..... 4-17
Current Shunt Function ..... 4-18
Peak-to-Peak Function ..... 4-18
Selecting Auto or Locked Range ..... 4-19
Selecting Continuous or External (Single) Trigger ..... 4-20
Instructions for Voltage Measurements ..... 4-20
Measurement Mode ..... 4-20
Transfer Mode ..... 4-21
Establish a Reference ..... 4-24
View Reference Softkey ..... 4-24
Choose Delta Units ..... 4-24
Instructions for Current Measurements ..... 4-25
Current Measurements with the Fluke A40B ..... 4-25
Overview ..... 4-25
Connect an A40B ..... 4-26
Set Up a Fluke A40B Shunt ..... 4-27
Measure with a Fluke A40B Shunt ..... 4-27
Current Measurements with an A40, A40A, or Custom Current Shunt ..... 4-28
Overview ..... 4-28
Connect an A40/A40A or Custom Shunt to INPUT 1 ..... 4-28
Connect an A40/A40A to the AUX Input ..... 4-29

Set up a Fluke A40/A40A or Custom Current Shunt ..... 4-30
Measure with a Fluke A40, A40A or Custom Shunt ..... 4-31
Instructions for Wideband Measurements ..... 4-31
Techniques for Reducing Transfer Errors ..... 4-32
DC Reversal ..... 4-32
Loading ..... 4-33
Mechanical Contact ..... 4-33
Thermal EMFs ..... 4-33
EMI ..... 4-34

**5 Remote Operation ..... 5-1**

Introduction ..... 5-1
Using the IEEE-488 Interface for Remote Control ..... 5-1
IEEE-488 Bus Restrictions ..... 5-2
IEEE-488 Bus Setup Procedure ..... 5-2
IEEE-488 Interface Configuration ..... 5-3
Bus Communication Overview ..... 5-3
RS-232 Serial Interface ..... 5-4
RS-232 Interface Specifications ..... 5-4
Set Up and Connect the Serial Interface ..... 5-5
Serial Remote Control Setup Procedure ..... 5-6
Exceptions for Serial Remote Control ..... 5-6
Ethernet Interface ..... 5-7
Set Up and Connect the Ethernet Interface ..... 5-7
Set the IP Address ..... 5-8
Select the Dynamic Host Configuration Protocol (DHCP) ..... 5-8
Set a Static Internet Address ..... 5-8
Configure the General Network Socket Port ..... 5-9
Configure the LAN Default Gateway ..... 5-9
Set the LAN Subnet Mask ..... 5-10
Read the MAC Address ..... 5-10
Establish an Ethernet Connection ..... 5-10
Terminate an Ethernet Connection ..... 5-11
Use of Ethernet Remote Control ..... 5-11
USB 2.0 Remote Control ..... 5-11

**6 Remote Commands ..... 6-1**

Introduction ..... 6-1
Parameter Syntax Rules ..... 6-1
Extra Space or Tab Characters ..... 6-2
Terminators ..... 6-2
Incoming Character Processing ..... 6-3
Response Message Syntax ..... 6-3
Input Buffer Operation ..... 6-3
Using Commands ..... 6-5
Multiple Commands ..... 6-5
Sequential and Overlapped Commands ..... 6-5
Calibration Security Passcode ..... 6-6
Long-Term Commands ..... 6-6
Definition: Queries and Commands ..... 6-7
Functional Elements of Commands ..... 6-7
Interface Messages (IEEE-488 Only) ..... 6-9
Use of *OPC?, *OPC, and *WAI ..... 6-10
Alphabetical List of IEEE-488.2 Common Commands ..... 6-18

Alphabetical List of 5790B Device-Dependent Commands ..... 6-24
Local-to-Remote State Transitions ..... 6-71
Checking Product Status ..... 6-72
Status Byte Register (STB) ..... 6-75
Service Request Line (SRQ) ..... 6-76
Service Request Enable Register (SRE) ..... 6-76
Programming the SRE ..... 6-76
Event Status Register (ESR) ..... 6-76
Event Status Enable Register (ESE) ..... 6-76
Bit Assignments for the ESR and ESE ..... 6-77
Read the ESR and ESE ..... 6-77
Load the ESE ..... 6-77
Instrument Status Register (ISR) ..... 6-77
Instrument Status Change Registers ..... 6-78
Instrument Status Change Enable Registers ..... 6-78
Bit Assignments for the ISR, ISCR, and ISCE ..... 6-78
Read the ISR, ISCR, or ISCE ..... 6-79
Output Queue ..... 6-79
Error Queue ..... 6-79

**7 Operator Maintenance ..... 7-1**

Introduction ..... 7-1
Fuse Replacement ..... 7-1
Clean the Air Filter ..... 7-3
General Cleaning ..... 7-4
User-Replaceable Parts ..... 7-5
Calibration ..... 7-6
Calibration Reports ..... 7-6
Save Calibration Reports ..... 7-6

**Appendices**

A Error Codes ..... A-1
B Calibration Constant Information ..... B-1

# List of Tables


| Table | Title | Page |
|---|---|---|
| 1-1. | Symbols | 1-4 |
| 2-1. | Standard Equipment | 2-2 |
| 2-2. | Line Power Cord Types Available from Fluke | 2-4 |
| 3-1. | Front Panel Features | 3-2 |
| 3-2. | Rear Panel Features | 3-5 |
| 4-1. | Power-Up State Defaults and Volatility | 4-2 |
| 4-2. | Non-volatile Setup Parameter Factory Defaults | 4-3 |
| 4-3. | Input Test Lead Summary | 4-8 |
| 4-4. | Input Impedance Summary | 4-9 |
| 4-5. | Measurement Display Amplitude Resolution | 4-16 |
| 5-1. | Supported IEEE-488 Interface Function Subsets | 5-3 |
| 5-2. | RS-232 Interface Parameter Choices | 5-4 |
| 6-1. | Units Accepted in Parameters and Used in Responses | 6-2 |
| 6-2. | Response Data Types | 6-4 |
| 6-3. | Functional Elements of Commands | 6-8 |
| 6-4. | Interface Messages Accepted by the Product | 6-9 |
| 6-5. | Interface Messages Sent by the Product | 6-10 |
| 6-6. | Command Summary | 6-11 |
| 6-7. | Operating State Transitions | 6-72 |
| 6-8. | Status Register Summary | 6-73 |
| 6-9. | Status Byte and SRE Bit Definitions | 6-75 |
| 6-10. | Bit Assignments for ESR and ESE | 6-77 |
| 6-11. | Bit Assignments for the ISR, ISCEs and ISCRs | 6-78 |
| 7-1. | Replacement Fuses | 7-2 |
| 7-2. | User-Replaceable Parts | 7-5 |

# List of Figures


| Figure | Title | Page |
|---|---|---|
| 2-1. | Line Power Cord Types Available from Fluke | 2-4 |
| 2-2. | Line Power Label and Switch Location | 2-5 |
| 3-1. | Front Panel | 3-1 |
| 3-2. | Rear Panel | 3-4 |
| 4-1. | Recommended Test Lead Connections to Test a Voltmeter | 4-11 |
| 4-2. | Recommended Test Lead Connections to Test a Source | 4-12 |
| 4-3. | Measuring Absolute Current Using A40B | 4-26 |
| 4-4. | Measuring Relative Current Using 792A-7004 | 4-28 |
| 4-5. | Measuring Relative Current Using 5790A-7001 | 4-29 |
| 6-1. | Status Register Overview | 6-74 |
| 7-1. | Accessing the Fuse | 7-2 |
| 7-2. | Accessing the Air Filter | 7-4 |

# Chapter 1
# Introduction and Specifications

## Introduction

The 5790B AC Measurement Standard (the Product) is a systems instrument that measures ac voltage with the uncertainty of a thermal transfer standard. Product operation is controlled from the front panel or remotely over the serial, USB, Ethernet, or IEEE-488 interface.

You can operate the Product in measurement mode or transfer mode. In measurement mode, the Product operates as a digital ac or dc voltmeter with up to 8 digits of resolution. Measurement mode uses an internal dc reference. In transfer mode, you apply an external dc or ac reference source. The Product automatically switches and calculates, and shows the resulting ac-dc or ac-ac difference on the LCD Color VGA display (the display).

The Product covers a voltage range of 600 µV to 1000 V (60 mV minimum in transfer mode), and a frequency range of 10 Hz to 1 MHz. A wideband voltage option extends frequency range to 30 MHz (Option 5790B/3) or 50 MHz (Option 5790B/5 and 5790B/AF). The Product is also compatible with Fluke A40, A40A, and A40B current shunts, enabling current measurements in both measurement mode or transfer mode up to 100 A. Refer to the Specifications for details.

A variety of input connections allows you to use the one that best suits your application. There are four sets of input terminals on the Product, two 50 Ω Type "N" connectors and two sets of five-way binding posts. One 50 Ω Type "N" and one set of binding posts is dedicated to the ac measurement and transfer modes. ac or dc voltages can be applied to either input connection, allowing you to perform automated ac-dc transfer measurements. The second Type "N" input connection supports the optional wideband mode, and the AUX binding posts are for Fluke A40 Series current shunts.

## How to Contact Fluke Calibration

To contact Fluke Calibration, call one of the following telephone numbers:

- Technical Support USA: 1-877-355-3225
- Calibration/Repair USA: 1-877-355-3225
- Canada: 1-800-36-FLUKE (1-800-363-5853)
- Europe: +31-40-2675-200
- Japan: +81-3-6714-3114
- Singapore: +65-6799-5566
- China: +86-400-810-3435
- Brazil: +55-11-3759-7600
- Anywhere in the world: +1-425-446-6110

To see product information or download manuals and the latest manual supplements, visit Fluke Calibration's website at www.flukecal.com.

To register your product, visit http://flukecal.com/register-product.

## Safety Information

A Warning identifies conditions and procedures that are dangerous to the user. A Caution identifies conditions and procedures that can cause damage to the Product or the equipment under test.

**⚠⚠Warning**

**To prevent possible electrical shock, fire, or personal injury:**

- **Read all safety information before you use the Product.**
- **Carefully read all instructions.**
- **Use the Product only as specified, or the protection supplied by the Product can be compromised.**
- **Turn the Product off and remove the mains power cord. Stop for two minutes to let the power assemblies discharge before you open the fuse door.**
- **Replace a blown fuse with exact replacement only for continued protection against arc flash.**
- **Do not apply more than the rated voltage, between the terminals or between each terminal and earth ground.**
- **Limit operation to the specified measurement category, voltage, or amperage ratings.**
- **Use the correct terminals, function, and range for measurements.**
- **Do not touch voltages >30 V ac rms, 42 V ac peak, or 60 V dc.**
- **Do not use the Product around explosive gas, vapor, or in damp or wet environments.**
- **Do not use the Product if it operates incorrectly.**

- **Do not operate the Product with covers removed or the case open. Hazardous voltage exposure is possible.**
- **Do not use an extension cord or adapter plug.**
- **Make sure that the space around the Product meets minimum requirements.**
- **Do not use test leads if they are damaged. Examine the test leads for damaged insulation, exposed metal, or if the wear indicator shows. Check test lead continuity.**
- **Use this Product indoors only.**
- **Do not put the Product where access to the mains power cord is blocked.**
- **Do not use a two-conductor mains power cord unless you install a protective ground wire to the Product ground terminal before you operate the Product.**
- **Use only the mains power cord and connector approved for the voltage and plug configuration in your country and rated for the Product.**
- **Make sure that the Product is grounded before use.**
- **Disconnect the mains power cord before you remove the Product covers.**
- **Remove the input signals before you clean the Product.**
- **Use only specified replacement parts.**
- **Use only specified replacement fuses.**
- **Have an approved technician repair the Product.**
- **Use only cables with correct voltage ratings.**
- **Connect the common test lead before the live test lead and remove the live test lead before the common test lead.**
- **Keep fingers behind the finger guards on the probes.**
- **Remove all probes, test leads, and accessories that are not necessary for the measurement.**
- **Disable the Product if it is damaged.**
- **Do not use the Product if it is damaged.**

## Symbols

The symbols shown in Table 1-1 can be found in this manual or on the Product.

**Table 1-1. Symbols**

| Symbol | Definition | Symbol | Definition |
|---|---|---|---|
| ⚠ | WARNING.RISK OF DANGER. | ⚠ | WARNING. HAZARDOUS VOLTAGE. Risk of electric shock. |
| | Consult user documentation. | CE | Conforms to European Union directives |
| | Certified by CSA Group to North American safety standards. | | Conforms to relevant Australian EMC standards |
| | Fuse | | Conforms to relevant South Korean EMC Standards. |
| | This product complies with the WEEE Directive marking requirements. The affixed label indicates that you must not discard this electrical/electronic product in domestic household waste. Product Category: With reference to the equipment types in the WEEE Directive Annex I, this product is classed as category 9 "Monitoring and Control Instrumentation" product. Do not dispose of this product as unsorted municipal waste. | CAT II | Measurement Category II is applicable to test and measuring circuits connected directly to utilization points (socket outlets and similar points) of the low-voltage MAINS installation. |

## Measurement and Transfer Modes

With the Product you can measure an ac or dc voltage just as you would with a voltmeter (measurement mode), or you can connect an external dc standard for comparison to an applied ac voltage as you would do with an ac-dc transfer standard (transfer mode). When in measurement mode, among many other things, the Product automatically:

1. Compares the heating effect of the incoming signal to that of the Product internal dc source, through the Fluke rms sensor. This method results in direct detection of true rms value.
2. Adjusts the internal dc source for a null at the output of the rms sensor, in the process eliminating many sources of error.
3. Applies correction factors saved at the time of calibration.
4. Presents the results of the ac-dc transfer on the display. The display shows rms amplitude and frequency of the signal being applied, accurate to within the uncertainty of the internal dc standard combined with the transfer uncertainty. (See the Specifications.)

Push the **Set Reference** softkey to set an incoming signal as a reference, activating transfer mode. In transfer mode, the Product automatically does the following:

1. Shows the reference source, the formula the Product is using to compute ac-dc or ac-ac difference, and the results of the formula.
2. Shows the **Average Reference** softkey to easily correct for dc reversal error. You apply both polarities of dc and the Product computes the average of the absolute values of the applied dc.
3. Continuously shows the results of comparisons of the heating effect of the incoming signal to that of the stored reference.
4. Applies correction factors saved at time of calibration as necessary.
5. Presents the results of the transfer on the display, accurate to within the uncertainty of the transfer device. (See the Specifications.)
6. Always shows the measured amplitude and frequency of the input signal on the display, no matter what other processes are taking place.

## An Overview of the Features

See Chapter 3 for detailed descriptions of front panel connectors, controls, and displays. Features of the Product include:

- Two main input choices: 50 Ω Type "N" coaxial or five-way binding posts.
- Make relative or absolute current measurements with a Fluke A40B, A40A, or A40 Current Shunt. See *Instructions for Current Measurement*.
- A dedicated AUX input terminal that provides current transfer capability.
- WIDEBAND 50 Ω Type "N" coaxial connector for measuring signals up to 30 MHz (requires 5790B/3 Wideband Option) or 50 MHz (requires 5790B/5 or 5790B/AF Wideband Option). The WIDEBAND input presents a 50 Ω load to the source. Signals accepted are from 700 µV to 7 V over a frequency range of 10 Hz to 30 MHz (Option 5790B/3) or 50 MHz (Option 5790B/5 or 5790B/AF). Only the lower eight Product voltage ranges are used by the WIDEBAND input.
- Closed-case periodic calibration in which no physical adjustments are necessary.
- The ability to print or save calibration reports. For reporting purposes, the Product maintains in nonvolatile memory a database of the calibration shifts from the previous calibration as well as from the most recent calibration. Calibration reports provide a way to develop a performance history of each Product.

- Real-time clock for date and time stamping reports, recording the time and date of calibration, and calculating specifications.
- Standard IEEE-488 (GPIB) interface, complying with ANSI/IEEE Standards 488.1-1987 and 488.2-1987.
- EIA Standard RS-232-C serial data interface for remote control of the Product.
- Universal Serial Bus (USB) 2.0 high-speed interface device port for remote control of the 5790B.
- Integrated 10/100/1000BASE-T Ethernet port for network connection remote control of the 5790B.
- Extensive internal software-controlled self testing and diagnostics of analog and digital functions.
- USB Host port to save calibration reports to a flash drive.
- Visual Connection Management input terminals illuminate to help show correct cable connection configurations.
- Soft Power - automatic selection of line voltage/frequency.
- Display with touch panel overlay.

## Instruction Manuals

This Operators Manual contains operating instructions for the Product. The Product Manual set provides complete information for the operators and service or maintenance personnel. The set includes the following manuals:

- *5790B Operators Manual*, on the Product CD
- *5790B Service Manual* available on the Fluke Calibration website.

### 5790B Operators Manual

This *5790B Operators Manual* provides complete information for installing the Product and operating the Product from the front panel and from the remote interface. The manual also provides a glossary of terms related to ac-dc transfers as well as other information for the Operators and programmer, such as specifications, and operating parameter setup procedures.

### 5790B Service Manual

The *5790B Service Manual* explains service, maintenance, verification, and calibration procedures in full detail.

## Service Information

Factory authorized service for the Product is available at selected Fluke Calibration Service Center. For warranty or after-warranty service, contact the nearest Technical Service Center for instructions. See *How to Contact Fluke Calibration*.

To reship the Product, use the original shipping container. If the original carton is not available, then a new container can be ordered from Fluke Calibration. See *How to Contact Fluke Calibration* if necessary.

# Specifications

Specifications are valid after allowing a warm-up period of 30 minutes, or twice the time the 5790B has been turned off, whichever is less. For example, if the 5790B has been turned off for 5 minutes, the warm-up period is 10 minutes. To simplify evaluation of how the 5790B covers your workload, use the Absolute Specification. Those include stability, temperature coefficient, linearity, and traceability to external standards.

*Note*

*When the 5790B is used within ±5 °C (±3 °C in Wideband) of the temperature of the last calibration, it is not necessary to add anything to the Absolute Uncertainty Specifications to determine the ratios between 5790B uncertainties and the uncertainties of a unit under test. The initial calibration at Fluke Calibration is done at 23 °C. The temperature of the last calibration can be verified at any time. Push* **Setup Menu>Calibration** *to show the last complete verification date and temperature on the calibration screen.*

# General Specifications

| | |
|---|---|
| Warm-up Time | 30 minutes or twice the time the 5790B has been turned OFF. |
| Relative Humidity | |
| Operating | ≤80 % to 30 °C, ≤70 % to 40 °C, ≤40 % to 50 °C |
| Storage | <95 % non-condensing. A power stabilization period of 4 days may be required after extended storage at high temperature and humidity |
| Altitude | |
| Operating | 0 - 2000 meters |
| Non-Operating | 0 - 12,200 meters |
| Temperature | |
| Operating | 0 °C to 50 °C |
| Calibration | 15 °C to 35 °C |
| Storage | -40 °C to 70 °C |
| Electromagnetic Compatibility (EMC) | |
| International | IEC 61326-1: Controlled Electromagnetic Environment<br>CISPR 11: Group 1, Class A<br>*Group 1: Equipment has intentionally generated and/or uses conductively-coupled radio frequency energy that is necessary for the internal function of the equipment itself.*<br>*Class A: Equipment is suitable for use in all establishments other than domestic and those directly connected to a low-voltage power supply network that supplies buildings used for domestic purposes. There may be potential difficulties in ensuring electromagnetic compatibility in other environments due to conducted and radiated disturbances.*<br>*Emissions that exceed the levels required by CISPR 11 can occur when the equipment is connected to a test object.* |
| Korea (KCC) | Class A Equipment (Industrial Broadcasting & Communication Equipment)<br>*Class A: Equipment meets requirements for industrial electromagnetic wave equipment and the seller or user should take notice of it. This equipment is intended for use in business environments and not to be used in homes.* |
| USA (FCC) | 47 CFR 15 subpart B. This product is considered an exempt device per clause 15.103. |
| Surge | ANSI C62.41-1980, Category A |
| Reliability | MIL-T-2880D, paragraph 3.13.3 |
| Size | |
| Height | 17.8 cm (7 in) standard rackmount + 1.5 cm (0.6 in) |
| Width | 43.2 cm (17 in) |
| Depth | 63 cm (24.8 in) |
| Maximum Power Requirements | |
| 5790B | 100 VA |
| Weight | |
| 5790B | 24 kg (53 lb) |
| With Wideband | 24.5 kg (54 lb) |
| Line Power | 50 Hz/60 Hz; 100 V - 120 V, 220 V - 240 V |
| Safety | IEC 61010-1: Overvoltage Category II, Pollution Degree 2<br>IEC 61010-2-030: Measurement 1000 V |
| Remote Interfaces | RS-232, IEEE-488, USB, Ethernet |
| Confidence Level | 99 % unless otherwise specified. |
| DC Zero Cal | Perform the dc zero calibration every 30 days. In addition, perform the dc zero calibration after powering up the unit the first time after unpacking following a shipment or if exposed to an environmental change of greater than 5 °C. |

# Resolution and Range Limits

| Voltage Range | Autorange Limits [1] | | Resolution | |
|---|---|---|---|---|
| | Upper | Lower | Filter Fast | Filter Med/Slow |
| 2.2 mV | 2.2 mV | 600 µV | 0.1 µV | 0.1 µV |
| 7 mV | 7 mV | 1.9 mV | 0.1 µV | 0.1 µV |
| 22 mV | 22 mV | 6 mV | 0.1 µV | 0.1 µV |
| 70 mV | 70 mV | 19 mV | 0.1 µV | 0.1 µV |
| 220 mV | 220 mV | 60 mV | 0.1 µV | 0.1 µV |
| 700 mV | 700 mV | 190 mV | 1.0 µV | 0.1 µV |
| 2.2 V | 2.2 V | 600 mV | 1.0 µV | 0.1 µV |
| 7 V | 7 V | 1.9 V | 10 µV | 1.0 µV |
| 22 V | 22 V | 6 V | 10 µV | 1.0 µV |
| 70 V | 70 V | 19 V | 100 µV | 10 µV |
| 220 V | 220 V | 60 V | 100 µV | 10 µV |
| 700 V | 700 V | 190 V | 1.0 mV | 100 µV |
| 1000 V [2] | 1050 V | 600 V | 1.0 mV | 100 µV |

[1] In locked ranges, readings may be made approximately 1 % beyond the autorange limits.
[2] The 1000 V range Upper Limit is 1050 V, autorange or locked.

# Electrical Specifications

The Product specifications describe the Absolute Specification of the Product. The Product specifications include stability, temperature, and humidity; within specified limits, linearity, line and load regulation, and the reference standard measurement uncertainty. The Product specifications are provided at a 99 % confidence level, k=2.58, normally distributed, unless otherwise stated.

The relative specifications are provided for enhanced accuracy applications. To calculate an enhanced absolute specification from the relative specification, it is necessary to combine the uncertainty of your external standards with the pertinent relative specifications. Specifications are valid after allowing a warm-up period of 30 minutes, or twice the time the Product has been turned off.

## Absolute AC Voltage

| Voltage Range | Frequency Range | ±5 °C of Calibration Temperature | | | |
|---|---|---|---|---|---|
| | | AC/DC Transfer Mode ± ppm 2 Years | Measurement Mode ± (ppm of Reading + µV) | | |
| | | | 90 Days | 1 Year | 2 Years |
| 2.2 mV | 10 Hz - 20 Hz | | 1700 + 1.3 | 1700 + 1.3 | 1700 + 1.3 |
| | 20 Hz- 40 Hz | | 740 + 1.3 | 740 + 1.3 | 740 + 1.3 |
| | 40 Hz - 20 kHz | | 420 + 1.3 | 420 + 1.3 | 420 + 1.3 |
| | 20 kHz - 50 kHz | | 810 + 2.0 | 810 + 2.0 | 820 + 2.0 |
| | 50 kHz - 100 kHz | | 1200 + 2.5 | 1200 + 2.5 | 1200 + 2.5 |
| | 100 kHz - 300 kHz | | 2300 + 4.0 | 2300 + 4.0 | 2300 + 4.0 |
| | 300 kHz - 500 kHz | | 2400 + 6.0 | 2400 + 8.0 | 2600 + 8.0 |
| | 500 kHz - 1 MHz | | 3200 + 6.0 | 3500 + 8.0 | 5000 + 8.0 |
| 7 mV | 10 Hz - 20 Hz | | 850 + 1.3 | 850 + 1.3 | 850 + 1.3 |
| | 20 Hz - 40 Hz | | 370 + 1.3 | 370 + 1.3 | 370 + 1.3 |
| | 40 Hz - 20 kHz | | 210 + 1.3 | 210 + 1.3 | 210 + 1.3 |
| | 20 kHz - 50 kHz | | 400 + 2.0 | 400 + 2.0 | 410 + 2.0 |
| | 50 kHz - 100 kHz | | 600 + 2.5 | 600 + 2.5 | 610 + 2.5 |
| | 100 kHz - 300 kHz | | 1200 + 4.0 | 1200 + 4.0 | 1200 + 4.0 |
| | 300 kHz - 500 kHz | | 1300 + 6.0 | 1300 + 8.0 | 1400 + 8.0 |
| | 500 kHz - 1 MHz | | 2000 + 6.0 | 2300 + 8.0 | 3600 + 8.0 |
| 22 mV | 10 Hz - 20 Hz | | 290 + 1.3 | 290 + 1.3 | 290 + 1.3 |
| | 20 Hz - 40 Hz | | 180 + 1.3 | 190 + 1.3 | 190 + 1.3 |
| | 40 Hz - 20 kHz | | 110 + 1.3 | 110 + 1.3 | 110 + 1.3 |
| | 20 kHz - 50 kHz | | 210 + 2.0 | 210 + 2.0 | 210 + 2.0 |
| | 50 kHz - 100 kHz | | 310 + 2.5 | 310 + 2.5 | 310 + 2.5 |
| | 100 kHz - 300 kHz | | 810 + 4.0 | 810 + 4.0 | 820 + 4.0 |
| | 300 kHz - 500 kHz | | 860 + 6.0 | 890 + 8.0 | 1000 + 8.0 |
| | 500 kHz - 1 MHz | | 1400 + 6.0 | 1700 + 8.0 | 2600 + 8.0 |

| Voltage Range | Frequency Range | ±5 °C of Calibration Temperature | | | |
|---|---|---|---|---|---|
| | | AC/DC Transfer Mode ± ppm 2 Years | Measurement Mode ± (ppm of Reading + µV) | | |
| | | | 90 Days | 1 Year | 2 Years |
| 70 mV | 10 Hz - 20 Hz [1] | | 240 + 1.5 | 240 + 1.5 | 240 + 1.5 |
| | 20 Hz - 40 Hz | | 120 + 1.5 | 120 + 1.5 | 130 + 1.5 |
| | 40 Hz - 20 kHz | | 64 + 1.5 | 65 + 1.5 | 69 + 1.5 |
| | 20 kHz - 50 kHz | | 120 + 2.0 | 130 + 2.0 | 130 + 2.0 |
| | 50 kHz - 100 kHz | | 260 + 2.5 | 260 + 2.5 | 260 + 2.5 |
| | 100 kHz - 300 kHz | | 510 + 4.0 | 510 + 4.0 | 530 + 4.0 |
| | 300 kHz - 500 kHz | | 660 + 6.0 | 670 + 8.0 | 680 + 8.0 |
| | 500 kHz - 1 MHz | | 1100 + 6.0 | 1100 + 8.0 | 1300 + 8.0 |
| 220 mV | 10 Hz - 20 Hz [1] | 210 | 210 + 1.5 | 210 + 1.5 | 210 + 1.5 |
| | 20 Hz - 40 Hz | 82 | 84 + 1.5 | 85 + 1.5 | 87 + 1.5 |
| | 40 Hz - 20 kHz | 34 | 37 + 1.5 | 38 + 1.5 | 43 + 1.5 |
| | 20 kHz - 50 kHz | 67 | 69 + 2.0 | 69 + 2.0 | 73 + 2.0 |
| | 50 kHz - 100 kHz | | 160 + 2.5 | 160 + 2.5 | 160 + 2.5 |
| | 100 kHz - 300 kHz | | 240 + 4.0 | 250 + 4.0 | 280 + 4.0 |
| | 300 kHz - 500 kHz | | 360 + 6.0 | 380 + 8.0 | 400 + 8.0 |
| | 500 kHz - 1 MHz | | 940 + 6.0 | 1000 + 8.0 | 1200 + 8.0 |
| 700 mV | 10 Hz - 20 Hz [1] | 210 | 210 + 1.5 | 210 + 1.5 | 210 + 1.5 |
| | 20 Hz - 40 Hz | 73 | 75 + 1.5 | 76 + 1.5 | 78 + 1.5 |
| | 40 Hz - 20 kHz | 27 | 31 + 1.5 | 33 + 1.5 | 38 + 1.5 |
| | 20 kHz - 50 kHz | 47 | 50 + 2.0 | 51 + 2.0 | 56 + 2.0 |
| | 50 kHz - 100 kHz | | 79 + 2.5 | 79 + 2.5 | 84 + 2.5 |
| | 100 kHz - 300 kHz | | 160 + 4.0 | 180 + 4.0 | 210 + 4.0 |
| | 300 kHz - 500 kHz | | 300 + 6.0 | 300 + 8.0 | 340 + 8.0 |
| | 500 kHz - 1 MHz | | 900 + 6.0 | 960 + 8.0 | 1200 + 8.0 |
| 2.2 V | 10 Hz - 20 Hz [2] | 200 | 200 | 200 | 200 |
| | 20 Hz - 40 Hz | 63 | 65 | 66 | 69 |
| | 40 Hz - 20 kHz | 18 | 22 | 24 | 29 |
| | 20 kHz - 50 kHz | 43 | 45 | 46 | 52 |
| | 50 kHz - 100 kHz | | 70 | 71 | 76 |
| | 100 kHz - 300 kHz | | 150 | 160 | 200 |
| | 300 kHz - 500 kHz | | 250 | 260 | 310 |
| | 500 kHz - 1 MHz | | 840 | 900 | 1200 |
| 7 V | 10 Hz - 20 Hz [2] | 200 | 200 | 200 | 200 |
| | 20 Hz - 40 Hz | 63 | 66 | 67 | 70 |
| | 40 Hz - 20 kHz | 18 | 22 | 24 | 29 |
| | 20 kHz - 50 kHz | 44 | 46 | 48 | 53 |
| | 50 kHz - 100 kHz | | 80 | 81 | 88 |
| | 100 kHz - 300 kHz | | 180 | 190 | 220 |
| | 300 kHz - 500 kHz | | 380 | 400 | 470 |
| | 500 kHz - 1 MHz | | 1100 | 1200 | 1500 |
| 22 V | 10 Hz - 20 Hz [2] | 200 | 200 | 200 | 200 |
| | 20 Hz - 40 Hz | 63 | 66 | 67 | 70 |
| | 40 Hz - 20 kHz | 21 | 25 | 27 | 31 |
| | 20 kHz - 50 kHz | 44 | 46 | 48 | 53 |
| | 50 kHz - 100 kHz | | 80 | 81 | 85 |
| | 100 kHz - 300 kHz | | 180 | 190 | 220 |
| | 300 kHz - 500 kHz | | 380 | 400 | 470 |
| | 500 kHz - 1 MHz | | 1100 | 1200 | 1500 |

| Voltage Range | Frequency Range | ±5 °C of Calibration Temperature | | | |
|---|---|---|---|---|---|
| | | AC/DC Transfer Mode ± ppm 2 Years | Measurement Mode ± (ppm of Reading + µV) | | |
| | | | 90 Days | 1 Year | 2 Years |
| 70 V [3] | 10 Hz - 20 Hz [2] | 200 | 200 | 200 | 200 |
| | 20 Hz - 40 Hz | 63 | 67 | 68 | 72 |
| | 40 Hz - 20 kHz | 25 | 30 | 32 | 39 |
| | 20 kHz - 50 kHz | 55 | 56 | 57 | 63 |
| | 50 kHz - 100 kHz | | 91 | 94 | 110 |
| | 100 kHz - 300 kHz | | 190 | 200 | 220 |
| | 300 kHz - 500 kHz | | 400 | 410 | 510 |
| | 500 kHz - 1 MHz | | 1100 | 1200 | 1500 |
| 220 V [3] | 10 Hz - 20 Hz | 200 | 200 | 200 | 200 |
| | 20 Hz - 40 Hz | 63 | 67 | 68 | 72 |
| | 40 Hz - 20 kHz | 23 | 29 | 31 | 38 |
| | 20 kHz - 50 kHz | 63 | 67 | 69 | 77 |
| | 50 kHz - 100 kHz | | 96 | 98 | 110 |
| | 100 kHz - 300 kHz | | 210 | 210 | 260 |
| | 300 kHz - 500 kHz | | 440 | 500 | 700 |
| 700 V | 10 Hz - 20 Hz [4] | 200 | 200 | 200 | 200 |
| | 20 Hz - 40 Hz | 92 | 96 | 99 | 110 |
| | 40 Hz - 20 kHz | 36 | 39 | 41 | 47 |
| | 20 kHz - 50 kHz | | 120 | 130 | 150 |
| | 50 kHz - 100 kHz | | 400 | 500 | 850 |
| 1000 V | 10 Hz - 20 Hz [4] | 200 | 200 | 200 | 200 |
| | 20 Hz - 40 Hz | 92 | 96 | 99 | 110 |
| | 40 Hz - 20 kHz | 33 | 37 | 38 | 44 |
| | 20 kHz - 50 kHz [5] | | 120 | 130 | 150 |
| | 50 kHz - 100 kHz [5] | | 400 | 500 | 850 |

[1] For 9.5 to 10 Hz, the specifications is ±(1000 ppm of reading + 1.5 µV)
[2] For 9.5 to 10 Hz, the specifications is ±(1000 ppm of reading)
[3] Inputs >100 kHz and with a V*Hz product >2.2E7 are typical.
[4] Typical specification, as determined by sourcing with the Fluke 5205A Precision Power Amplifier.
[5] Inputs >30 kHz and >750 V are typical, as determined by sourcing with the Fluke 5205A Precision Power Amplifier.
Note: The Product is to be used in controlled environments. For disturbances on the mains power supply of >0.5 Vrms from 10 MHz to 40 MHz, add 5 ppm to the 2.2 V range.

## Relative AC Voltage

| Voltage Range | Frequency Range | ±5 °C of Calibration Temperature | | | |
|---|---|---|---|---|---|
| | | AC/DC Transfer Mode ± ppm 2 Years | Measurement Mode ± (ppm of Reading + µV) | | |
| | | | 90 Days | 1 Year | 2 Years |
| 2.2 mV | 10 Hz - 20 Hz | | 100 + 1.3 | 110 + 1.3 | 110 + 1.3 |
| | 20 Hz - 40 Hz | | 54 + 1.3 | 64 + 1.3 | 68 + 1.3 |
| | 40 Hz - 20 kHz | | 44 + 1.3 | 57 + 1.3 | 61 + 1.3 |
| | 20 kHz - 50 kHz | | 57 + 2.0 | 67 + 2.0 | 110 + 2.0 |
| | 50 kHz - 100 kHz | | 79 + 2.5 | 86 + 2.5 | 120 + 2.5 |
| | 100 kHz - 300 kHz | | 190 + 4.0 | 230 + 4.0 | 390 + 4.0 |
| | 300 kHz - 500 kHz | | 590 + 6.0 | 720 + 8.0 | 1200 + 8.0 |
| | 500 kHz - 1 MHz | | 2200 + 6.0 | 2600 + 8.0 | 4400 + 8.0 |
| 7 mV | 10 Hz - 20 Hz | | 80 + 1.3 | 83 + 1.3 | 86 + 1.3 |
| | 20 Hz - 40 Hz | | 33 + 1.3 | 39 + 1.3 | 45 + 1.3 |
| | 40 Hz - 20 kHz | | 29 + 1.3 | 36 + 1.3 | 42 + 1.3 |
| | 20 kHz - 50 kHz | | 40 + 2.0 | 44 + 2.0 | 63 + 2.0 |
| | 50 kHz - 100 kHz | | 53 + 2.5 | 57 + 2.5 | 72 + 2.5 |
| | 100 kHz - 300 kHz | | 110 + 4.0 | 130 + 4.0 | 210 + 4.0 |
| | 300 kHz - 500 kHz | | 370 + 6.0 | 450 + 8.0 | 740 + 8.0 |
| | 500 kHz - 1 MHz | | 1600 + 6.0 | 2000 + 8.0 | 3400 + 8.0 |
| 22 mV | 10 Hz - 20 Hz | | 69 + 1.3 | 72 + 1.3 | 75 + 1.3 |
| | 20 Hz - 40 Hz | | 34 + 1.3 | 40 + 1.3 | 46 + 1.3 |
| | 40 Hz - 20 kHz | | 30 + 1.3 | 36 + 1.3 | 43 + 1.3 |
| | 20 kHz - 50 kHz | | 40 + 2.0 | 45 + 2.0 | 64 + 2.0 |
| | 50 kHz - 100 kHz | | 53 + 2.5 | 57 + 2.5 | 73 + 2.5 |
| | 100 kHz - 300 kHz | | 97 + 4.0 | 110 + 4.0 | 160 + 4.0 |
| | 300 kHz - 500 kHz | | 310 + 6.0 | 380 + 8.0 | 610 + 8.0 |
| | 500 kHz - 1 MHz | | 1200 + 6.0 | 1500 + 8.0 | 2500 + 8.0 |
| 70 mV | 10 Hz - 20 Hz | | 60 + 1.5 | 61 + 1.5 | 62 + 1.5 |
| | 20 Hz - 40 Hz | | 27 + 1.5 | 30 + 1.5 | 37 + 1.5 |
| | 40 Hz - 20 kHz | | 22 + 1.5 | 25 + 1.5 | 34 + 1.5 |
| | 20 kHz - 50 kHz | | 34 + 2.0 | 36 + 2.0 | 44 + 2.0 |
| | 50 kHz - 100 kHz | | 53 + 2.5 | 54 + 2.5 | 62 + 2.5 |
| | 100 kHz - 300 kHz | | 110 + 4.0 | 120 + 4.0 | 170 + 4.0 |
| | 300 kHz - 500 kHz | | 270 + 6.0 | 290 + 8.0 | 320 + 8.0 |
| | 500 kHz - 1 MHz | | 910 + 6.0 | 970 + 8.0 | 1200 + 8.0 |
| 220 mV | 10 Hz - 20 Hz | 55 | 60 + 1.5 | 61 + 1.5 | 62 + 1.5 |
| | 20 Hz - 40 Hz | 20 | 27 + 1.5 | 29 + 1.5 | 35 + 1.5 |
| | 40 Hz - 20 kHz | 17 | 22 + 1.5 | 24 + 1.5 | 31 + 1.5 |
| | 20 kHz - 50 kHz | 17 | 22 + 2.0 | 24 + 2.0 | 33 + 2.0 |
| | 50 kHz - 100 kHz | | 51 + 2.5 | 52 + 2.5 | 59 + 2.5 |
| | 100 kHz - 300 kHz | | 100 + 4.0 | 120 + 4.0 | 170 + 4.0 |
| | 300 kHz - 500 kHz | | 260 + 6.0 | 290 + 8.0 | 310 + 8.0 |
| | 500 kHz - 1 MHz | | 890 + 6.0 | 950 + 8.0 | 1200 + 8.0 |
| 700 mV | 10 Hz - 20 Hz | 55 | 60 + 1.5 | 61 + 1.5 | 62 + 1.5 |
| | 20 Hz - 40 Hz | 20 | 27 + 1.5 | 29 + 1.5 | 34 + 1.5 |
| | 40 Hz - 20 kHz | 15 | 22 + 1.5 | 24 + 1.5 | 31 + 1.5 |
| | 20 kHz - 50 kHz | 15 | 22 + 2.0 | 24 + 2.0 | 33 + 2.0 |
| | 50 kHz - 100 kHz | | 51 + 2.5 | 52 + 2.5 | 59 + 2.5 |
| | 100 kHz - 300 kHz | | 100 + 4.0 | 120 + 4.0 | 170 + 4.0 |
| | 300 kHz - 500 kHz | | 260 + 6.0 | 270 + 8.0 | 310 + 8.0 |
| | 500 kHz - 1 MHz | | 890 + 6.0 | 950 + 8.0 | 1200 + 8.0 |

| Voltage Range | Frequency Range | ±5 °C of Calibration Temperature | | | |
|---|---|---|---|---|---|
| | | AC/DC Transfer Mode ± ppm 2 Years | Measurement Mode ± (ppm of Reading + µV) | | |
| | | | 90 Days | 1 Year | 2 Years |
| 2.2 V | 10 Hz - 20 Hz | 55 | 60 | 61 | 62 |
| | 20 Hz - 40 Hz | 19 | 26 | 28 | 34 |
| | 40 Hz - 20 kHz | 15 | 20 | 22 | 27 |
| | 20 kHz - 50 kHz | 15 | 21 | 23 | 33 |
| | 50 kHz - 100 kHz | | 49 | 50 | 57 |
| | 100 kHz - 300 kHz | | 92 | 110 | 160 |
| | 300 kHz - 500 kHz | | 220 | 230 | 280 |
| | 500 kHz - 1 MHz | | 830 | 890 | 1200 |
| 7 V | 10 Hz - 20 Hz | 55 | 60 | 61 | 62 |
| | 20 Hz - 40 Hz | 19 | 27 | 29 | 36 |
| | 40 Hz - 20 kHz | 15 | 20 | 22 | 27 |
| | 20 kHz - 50 kHz | 18 | 23 | 26 | 35 |
| | 50 kHz - 100 kHz | | 62 | 64 | 73 |
| | 100 kHz - 300 kHz | | 140 | 150 | 180 |
| | 300 kHz - 500 kHz | | 360 | 380 | 450 |
| | 500 kHz - 1 MHz | | 1100 | 1200 | 1500 |
| 22 V | 10 Hz - 20 Hz | 55 | 60 | 61 | 62 |
| | 20 Hz - 40 Hz | 19 | 28 | 30 | 37 |
| | 40 Hz - 20 kHz | 15 | 20 | 22 | 27 |
| | 20 kHz - 50 kHz | 18 | 23 | 26 | 35 |
| | 50 kHz - 100 kHz | | 62 | 64 | 69 |
| | 100 kHz - 300 kHz | | 140 | 150 | 180 |
| | 300 kHz - 500 kHz | | 360 | 380 | 450 |
| | 500 kHz - 1 MHz | | 1100 | 1200 | 1500 |
| 70 V [1] | 10 Hz - 20 Hz | 55 | 60 | 62 | 63 |
| | 20 Hz - 40 Hz | 19 | 29 | 31 | 39 |
| | 40 Hz - 20 kHz | 15 | 23 | 25 | 34 |
| | 20 kHz - 50 kHz | 22 | 25 | 27 | 39 |
| | 50 kHz - 100 kHz | | 64 | 68 | 85 |
| | 100 kHz - 300 kHz | | 140 | 150 | 180 |
| | 300 kHz - 500 kHz | | 370 | 390 | 490 |
| | 500 kHz - 1 MHz | | 1100 | 1200 | 1500 |
| 220 V [1] | 10 Hz - 20 Hz | 55 | 61 | 62 | 64 |
| | 20 Hz - 40 Hz | 19 | 30 | 32 | 40 |
| | 40 Hz - 20 kHz | 15 | 23 | 25 | 34 |
| | 20 kHz - 50 kHz | 24 | 30 | 34 | 49 |
| | 50 kHz - 100 kHz | | 66 | 69 | 83 |
| | 100 kHz - 300 kHz | | 160 | 170 | 220 |
| | 300 kHz - 500 kHz | | 410 | 480 | 680 |
| 700 V | 10 Hz - 20 Hz [2] | 55 | 62 | 63 | 65 |
| | 20 Hz - 40 Hz | 19 | 31 | 33 | 41 |
| | 40 Hz - 20 kHz | 19 | 24 | 25 | 31 |
| | 20 kHz - 50 kHz | | 100 | 110 | 140 |
| | 50 kHz - 100 kHz | | 390 | 500 | 850 |
| 1000 V | 10 Hz - 20 Hz [2] | 55 | 62 | 63 | 65 |
| | 20 Hz - 40 Hz | 19 | 31 | 33 | 41 |
| | 40 Hz - 20 kHz | 19 | 24 | 25 | 31 |
| | 20 kHz - 50 kHz [3] | | 100 | 110 | 140 |
| | 50 kHz - 100 kHz [3] | | 390 | 500 | 850 |

[1] Inputs >100 kHz and with a V*Hz product >2.2E7 are typical.
[2] Typical specification, as determined by sourcing with the Fluke 5205A Precision Power Amplifier.
[3] Inputs >30 kHz and >750 V are typical, as determined by sourcing with the Fluke 5205A Precision Power Amplifier.

## Absolute AC Non-sine Voltage

| Range [1] | Frequency Range | 1-Year, tcal ±5 °C, ±(% of reading + µV) |
|---|---|---|
| 2.2 mV | 10 Hz - 45 Hz | 0.1 + 1.3 |
| | 45 Hz - 1 kHz | 0.1+ 1.3 |
| | 1 kHz - 20 kHz | 0.17+ 1.3 |
| | 20 kHz - 100 kHz | 0.5 + 2.5 |
| 7 mV | 10 kHz - 45 Hz | 0.1 + 1.3 |
| | 45 Hz - 1 kHz | 0.1 + 1.3 |
| | 1 kHz - 20 kHz | 0.17 + 1.3 |
| | 20 kHz - 100 kHz | 0.5 + 2.5 |
| 22 mV | 10 Hz - 45 Hz | 0.1 + 1.3 |
| | 45 Hz - 1 kHz | 0.1 + 1.3 |
| | 1 kHz - 20 kHz | 0.17+ 1.3 |
| | 20 kHz - 100 kHz | 0.5 + 2.5 |
| 70 mV | 10 Hz - 45 Hz | 0.1 + 1.5 |
| | 45 kHz - 1 kHz | 0.1 + 1.5 |
| | 1 kHz - 20 kHz | 0.17 + 1.5 |
| | 20 kHz - 100 kHz | 0.5 + 2.5 |
| 220 mV | 10 Hz - 45 Hz | 0.1 + 1.5 |
| | 45 Hz - 1 kHz | 0.1 + 1.5 |
| | 1 kHz - 20 kHz | 0.17 + 1.5 |
| | 20 kHz - 100 kHz | 0.5 + 2.5 |
| 700 mV | 10 Hz - 45 Hz | 0.1 + 1.5 |
| | 45 Hz - 1 kHz | 0.1 + 1.5 |
| | 1 kHz - 20 kHz | 0.17 + 1.5 |
| | 20 kHz - 100 kHz | 0.5 + 2.5 |
| 2.2 V [2] | 10 Hz - 45 Hz | 0.1 |
| | 45 Hz - 1 kHz | 0.1 |
| | 1 kHz - 20 kHz | 0.17 |
| | 20 kHz - 100 kHz | 0.5 |
| 7 V | 10 Hz - 45 Hz | 0.1 |
| | 45 Hz - 1 kHz | 0.1 |
| | 1 kHz - 20 kHz | 0.17 |
| | 20 kHz - 100 kHz | 0.5 |
| 22 V [2] | 10 Hz - 45 Hz | 0.1 |
| | 45 Hz - 1 kHz | 0.1 |
| | 1 kHz - 20 kHz | 0.17 |
| | 20 kHz - 100 kHz | 0.5 |
| 70 V | 10 Hz - 45 Hz | 0.1 |
| | 45 Hz - 1 kHz | 0.1 |
| | 1 kHz - 20 kHz | 0.17 |
| | 20 kHz - 100 kHz | 0.5 |

[1] Specifications apply for non-sinusoidal inputs with crest factor <3.0 and with harmonic content band-limited to <1 MHz.
[2] Crest factor limited to <2.3 for signals greater than 75 % of full scale RMS.

## Absolute DC Voltage

| Voltage Range | ± 5 °C of Calibration Temperature | | |
|---|---|---|---|
| | Measurement Mode ± (ppm of Reading + µV) | | |
| | 90 Days | 1 Year | 2 Years |
| 220 mV | 37 + 1.5 | 38 + 1.5 | 43 + 1.5 |
| 700 mV | 31 + 1.5 | 33 + 1.5 | 38 + 1.5 |
| 2.2 V | 22 | 24 | 29 |
| 7 V | 22 | 24 | 29 |
| 22 V | 25 | 27 | 31 |
| 70 V | 30 | 32 | 39 |
| 220 V | 29 | 31 | 38 |
| 700 V | 39 | 41 | 47 |
| 1000 V | 37 | 38 | 44 |

Note: DC specification valid only when dc input signal is averaged with an equal and opposite dc input signal to eliminate dc offset errors. The use of Input 1 for dc inputs is not recommended due to the inherent thermal EMFs in a “N” connector. See Operators Manual for details.

## Relative DC Voltage

| Voltage Range | ± 5 °C of Calibration Temperature | | |
|---|---|---|---|
| | Measurement Mode ± (ppm of Reading + µV) | | |
| | 90 Days | 1 Year | 2 Years |
| 220 mV | 22 + 1.5 | 24 + 1.5 | 31 + 1.5 |
| 700 mV | 22 + 1.5 | 24 + 1.5 | 31 + 1.5 |
| 2.2 V | 20 | 22 | 27 |
| 7 V | 20 | 22 | 27 |
| 22 V | 20 | 22 | 27 |
| 70 V | 23 | 25 | 34 |
| 220 V | 23 | 25 | 34 |
| 700 V | 24 | 25 | 31 |
| 1000 V | 24 | 25 | 31 |

Note: DC specification valid only when dc input signal is averaged with an equal and opposite dc input signal to eliminate dc offset errors. The use of Input 1 for dc inputs is not recommended due to the inherent thermal EMFs in a “N” connector. See Operators Manual for details.

# Secondary Electrical Specifications

Secondary performance specifications and operating characteristics are included in uncertainty specifications. They are provided for special calibration requirements such as stability or linearity tests.

## AC Secondary Performance

| Voltage Range | Frequency Range | 24 Hour AC Stability ± 1 °C Slow Filter Peak-Peak ± µV | Temperature Coefficient [1] | | Input Resistance [2] |
|---|---|---|---|---|---|
| | | | 10 °C to 40 °C | 0 °C to 10 °C 40 °C to 50 °C | |
| | | | ppm / °C | | |
| 2.2 mV | 10 Hz - 20 Hz | 0.4 | 50 | 50 | 10 MΩ |
| | 20 Hz - 40 Hz | 0.4 | 50 | 50 | |
| | 40 Hz - 20 kHz | 0.4 | 50 | 50 | |
| | 20 kHz - 50 kHz | 0.4 | 50 | 50 | |
| | 50 kHz - 100 kHz | 0.8 | 75 | 75 | |
| | 100 kHz - 300 kHz | 1.5 | 100 | 100 | |
| | 300 kHz - 500 kHz | 3.0 | 150 | 150 | |
| | 500 kHz - 1 MHz | 4.5 | 200 | 200 | |
| 7 mV | 10 Hz - 20 Hz | 0.4 | 15 | 15 | 10 MΩ |
| | 20 Hz - 40 Hz | 0.4 | 15 | 15 | |
| | 40 Hz - 20 kHz | 0.4 | 15 | 15 | |
| | 20 kHz - 50 kHz | 0.4 | 15 | 15 | |
| | 50 kHz - 100 kHz | 0.8 | 25 | 25 | |
| | 100 kHz - 300 kHz | 1.5 | 60 | 60 | |
| | 300 kHz - 500 kHz | 3.0 | 80 | 80 | |
| | 500 kHz - 1 MHz | 4.5 | 125 | 125 | |
| 22 mV | 10 Hz - 20 Hz | 0.4 | 5 | 5 | 10 MΩ |
| | 20 Hz - 40 Hz | 0.4 | 5 | 5 | |
| | 40 Hz - 20 kHz | 0.4 | 5 | 5 | |
| | 20 kHz - 50 kHz | 0.4 | 5 | 5 | |
| | 50 kHz - 100 kHz | 0.8 | 8 | 8 | |
| | 100 kHz - 300 kHz | 1.5 | 10 | 10 | |
| | 300 kHz - 500 kHz | 3.0 | 40 | 40 | |
| | 500 kHz - 1 MHz | 4.5 | 100 | 100 | |
| | | ± (ppm of Reading) | | | |
| 70 mV | 10 Hz - 20 Hz | 18 | 5 | 5 | 10 MΩ |
| | 20 Hz - 40 Hz | 18 | 5 | 5 | |
| | 40 Hz - 20 kHz | 18 | 5 | 5 | |
| | 20 kHz - 50 kHz | 18 | 5 | 5 | |
| | 50 kHz - 100 kHz | 24 | 8 | 8 | |
| | 100 kHz - 300 kHz | 24 | 10 | 10 | |
| | 300 kHz - 500 kHz | 48 | 30 | 30 | |
| | 500 kHz - 1 MHz | 150 | 75 | 75 | |
| 220 mV | 10 Hz - 20 Hz | 12 | 1.5 | 3.0 | 10 MΩ |
| | 20 Hz - 40 Hz | 8 | 1.5 | 3.0 | |
| | 40 Hz - 20 kHz | 8 | 1.5 | 3.0 | |
| | 20 kHz - 50 kHz | 8 | 2.0 | 3.0 | |
| | 50 kHz - 100 kHz | 18 | 5.0 | 8.0 | |
| | 100 kHz - 300 kHz | 24 | 10.0 | 10.0 | |
| | 300 kHz - 500 kHz | 36 | 20.0 | 20.0 | |
| | 500 kHz - 1 MHz | 120 | 50.0 | 50.0 | |

| Voltage Range | Frequency Range | 24 Hour AC Stability ± 1 °C Slow Filter Peak-Peak ± µV | Temperature Coefficient [1] | | Input Resistance [2] |
|---|---|---|---|---|---|
| | | | 10 °C to 40 °C | 0 °C to 10 °C 40 °C to 50 °C | |
| | | | ppm / °C | | |
| 700 mV | 10 Hz - 20 Hz | 8 | 1.5 | 3.0 | 10 MΩ |
| | 20 Hz - 40 Hz | 6 | 1.5 | 3.0 | |
| | 40 Hz - 20 kHz | 6 | 1.5 | 3.0 | |
| | 20 kHz - 50 kHz | 6 | 2.0 | 3.0 | |
| | 50 kHz - 100 kHz | 12 | 5.0 | 8.0 | |
| | 100 kHz - 300 kHz | 18 | 10.0 | 10.0 | |
| | 300 kHz - 500 kHz | 36 | 20.0 | 20.0 | |
| | 500 kHz - 1 MHz | 96 | 50.0 | 50.0 | |
| 2.2 V | 10 Hz - 20 Hz | 8 | 1.5 | 3.0 | 10 MΩ |
| | 20 Hz - 40 Hz | 5 | 1.5 | 3.0 | |
| | 40 Hz - 20 kHz | 5 | 1.5 | 3.0 | |
| | 20 kHz - 50 kHz | 5 | 2.0 | 3.0 | |
| | 50 kHz - 100 kHz | 10 | 5.0 | 8.0 | |
| | 100 kHz - 300 kHz | 18 | 10.0 | 10.0 | |
| | 300 kHz - 500 kHz | 30 | 20.0 | 20.0 | |
| | 500 kHz - 1 MHz | 90 | 50.0 | 50.0 | |
| 7 V | 10 Hz - 20 Hz | 8 | 1.5 | 3.0 | 50 kΩ |
| | 20 Hz - 40 Hz | 5 | 1.5 | 3.0 | |
| | 40 Hz - 20 kHz | 5 | 1.5 | 3.0 | |
| | 20 kHz - 50 kHz | 5 | 2.0 | 3.0 | |
| | 50 kHz - 100 kHz | 10 | 5.0 | 8.0 | |
| | 100 kHz - 300 kHz | 18 | 15.0 | 15.0 | |
| | 300 kHz - 500 kHz | 30 | 30.0 | 30.0 | |
| | 500 kHz - 1 MHz | 90 | 65.0 | 65.0 | |
| 22 V | 10 Hz - 20 Hz | 8 | 1.5 | 3.0 | 50 kΩ |
| | 20 Hz - 40 Hz | 5 | 1.5 | 3.0 | |
| | 40 Hz - 20 kHz | 5 | 1.5 | 3.0 | |
| | 20 kHz - 50 kHz | 5 | 2.0 | 3.0 | |
| | 50 kHz - 100 kHz | 10 | 5.0 | 8.0 | |
| | 100 kHz - 300 kHz | 18 | 15.0 | 15.0 | |
| | 300 kHz - 500 kHz | 30 | 30.0 | 30.0 | |
| | 500 kHz - 1 MHz | 90 | 65.0 | 65.0 | |
| 70 V [3] | 10 Hz - 20 Hz | 8 | 1.5 | 3.0 | 50 kΩ |
| | 20 Hz - 40 Hz | 5 | 1.5 | 3.0 | |
| | 40 Hz - 20 kHz | 5 | 1.5 | 3.0 | |
| | 20 kHz - 50 kHz | 5 | 2.0 | 3.0 | |
| | 50 kHz - 100 kHz | 18 | 5.0 | 8.0 | |
| | 100 kHz - 300 kHz | 36 | 15.0 | 15.0 | |
| | 300 kHz - 500 kHz | 48 | 40.0 | 40.0 | |
| | 500 kHz - 1 MHz | 120 | 75.0 | 75.0 | |

| Voltage Range | Frequency Range | 24 Hour AC Stability ± 1 °C Slow Filter Peak-Peak ± µV | Temperature Coefficient [1] | | Input Resistance [2] |
|---|---|---|---|---|---|
| | | | 10 °C to 40 °C | 0 °C to 10 °C<br>40 °C to 50 °C | |
| | | | ppm / °C | | |
| 220 V [3] | 10 Hz - 20 Hz | 8 | 1.5 | 3.0 | 50 kΩ |
| | 20 Hz - 40 Hz | 5 | 1.5 | 3.0 | |
| | 40 Hz - 20 kHz | 5 | 1.5 | 3.0 | |
| | 20 kHz - 50 kHz | 5 | 2.0 | 3.0 | |
| | 50 kHz - 100 kHz | 18 | 5.0 | 8.0 | |
| | 100 kHz - 300 kHz | 36 | 15.0 | 15.0 | |
| | 300 kHz - 500 kHz | 48 | 40.0 | 40.0 | |
| 700 V | 10 Hz - 20 Hz [4] | 8 | 1.5 | 4.0 | 500 kΩ |
| | 20 Hz - 40 Hz | 5 | 1.5 | 4.0 | |
| | 40 Hz – 20 kHz | 5 | 1.5 | 4.0 | |
| | 20 kHz – 50 kHz | 18 | 5.0 | 7.0 | |
| | 50 kHz - 100 kHz | 36 | 15.0 | 15.0 | |
| 1000 V | 10 Hz - 20 Hz [4] | 8 | 1.5 | 4.0 | 500 kΩ |
| | 20 Hz - 40 Hz | 5 | 1.5 | 4.0 | |
| | 40 Hz - 20 kHz | 5 | 1.5 | 4.0 | |
| | 20 kHz - 50 kHz [5] | 18 | 5.0 | 7.0 | |
| | 50 kHz - 100 kHz [5] | 36 | 15.0 | 15.0 | |

[1] Add to uncertainty when more than 5 °C from calibration temperature.
[2] Input capacitance approximately 100 pF.
[3] Inputs with a V*Hz product >2.2 E7 are unspecified.
[4] Typical specification, as determined by sourcing with the Fluke 5205A Precision Power Amplifier.
[5] Inputs that are >30 kHz and >750 V are typical, as determined by sourcing with the Fluke 5205A Precision Power Amplifier.

## DC Secondary Performance

| Voltage Range | Temperature Coefficient [1] | | Input Resistance [2] |
|---|---|---|---|
| | 10 °C to 40 °C | 0 °C to 10 °C<br>40 °C to 50 °C | |
| | ppm / °C | | |
| 220 mV | 1.5 | 3.0 | 10 MΩ |
| 700 mV | 1.5 | 3.0 | 10 MΩ |
| 2.2 V | 1.5 | 3.0 | 10 MΩ |
| 7 V | 1.5 | 3.0 | 50 kΩ |
| 22 V | 1.5 | 3.0 | 50 kΩ |
| 70 V | 1.5 | 3.0 | 50 kΩ |
| 220 V | 1.5 | 3.0 | 50 kΩ |
| 700 V | 1.5 | 4.0 | 500 kΩ |
| 1000 V | 1.5 | 4.0 | 500 kΩ |

[1] Add to uncertainty when more than 5 °C from calibration temperature.
[2] Input capacitance approximately 100 pF.
Note: DC specification valid only when dc input signal is averaged with an equal and opposite dc input signal to eliminate dc offset errors. The use of Input 1 for dc inputs is not recommended due to the inherent thermal EMFs in a “N” connector. See Operators Manual for details.

## Operating Characteristics

Maximum Non-destructive Input ..... 1200 V rms
Guard Isolation ..... 10 V peak
Volt-Hertz Product ..... $1 \times 10^8$
Frequency Accuracy (from 0 °C to 50 °C)
  10 Hz - 120 Hz ..... 100 ppm + 10 digits
  Above 120 Hz ..... 100 ppm + 2 digits
Frequency Resolution ..... 1.00 Hz to 119.99 Hz
  0.1200 kHz to 1.1999 kHz
  1.200 kHz to 11.999 kHz
  12.00 kHz to 119.99 kHz
  0.1200 MHz to 1.0000 MHz
  1.0000 MHz to 1.1999 MHz
  1.200 MHz to 11.999 MHz (Wideband only except 1.200 MHz to 1.209 MHz)
  30.00 MHz 30.00 MHz to 50.00 MHz (Wideband 5790B/5 & 5790B/AF only)
Reading Rate
  <40 Hz ..... 2 seconds per reading
  40 Hz ..... 2 seconds decreasing linearly to 1 second at 200 Hz
  >200 Hz ..... 1 second per reading
Maximum Settling Time to Full Specifications (in range lock)
  Filter Off ..... 1 sample
    dc ..... 6 seconds
    <200 Hz ..... 8 seconds
    >200 Hz ..... 4 seconds
  Filter Fast ..... 4 averaged samples
    dc ..... 10 seconds
    <200 Hz ..... 16 seconds
    >200 Hz ..... 8 seconds
  Filter Medium ..... 16 averaged samples
    dc ..... 22 seconds
    <200 Hz ..... 32 seconds
    >200 Hz ..... 16 seconds
  Filter Slow ..... 32 averaged samples
    dc ..... 40 seconds
    <200 Hz ..... 64 seconds
    >200 Hz ..... 32 seconds
Filter Buffer Restart Limits:
  Fine: Fast: 10 counts
    Medium/Slow
      <220 mV ..... 10 counts
      >220 mV ..... 100 counts
  Medium: Fast: 100 counts
    Medium/Slow
      <220 mV ..... 100 counts
      >220 mV ..... 1000 counts
  Course: Fast: 1000 counts
    Medium/Slow
      <220 mV ..... 1000 counts
      >220 mV ..... 10000 counts
Input Waveform ..... Specified for sinewave with THD less than 1 %

## AUX Input Characteristics

The AUX input can be used with the Fluke A40/A40A Series Current Shunts to make relative ac current measurements. The 5790A-7001 A40/A40A Current Shunt Adapter and Cable are required. For optimal current measurements using shunts, see the Operators Manual.

Input Resistance ..... 91 Ω ± 1 %
Operating Input Voltage..... 3 mV to 500 mV
Maximum Non-Destructive Input ..... 20 V rms

# Absolute Wideband Specifications (5790B/3, 5790B/5, and 5790B/AF)

| Voltage [1] Range | Frequency Range | Flatness [2] 1 year ± 3 °C ± (% of Reading + µV) | Flatness [3] Temperature Coefficient ppm / °C | 0 °C to 50 °C [4] ± (% of Reading + µV) | | | Resolution |
|---|---|---|---|---|---|---|---|
| | | | | 90 Days | 1 Year | 2 Years | |
| 2.2 mV | 10 Hz - 30 Hz | 0.10 + 0 | 75 | 0.5 + 1.2 | 0.6 + 1.5 | 0.8 + 2 | 0.1 µV |
| | 30 Hz - 120 Hz | 0.05 + 0 | 75 | 0.5 + 1.2 | 0.6 + 1.5 | 0.8 + 2 | |
| | 120 Hz - 1.2 kHz | 0.05 + 0 | 75 | 0.5 + 1.2 | 0.6 + 1.5 | 0.8 + 2 | |
| | 1.2 kHz - 120 kHz | 0.05 + 0 | 75 | 0.5 + 1.2 | 0.6 + 1.5 | 0.8 + 2 | |
| | 120 kHz - 500 kHz | 0.07 + 1 | 75 | 0.5 + 1.2 | 0.6 + 1.5 | 0.8 + 2 | |
| | 500 kHz - 1.2 MHz | 0.07 + 1 | 75 | | | | |
| | 1.2 MHz - 2 MHz | 0.07 + 1 | 100 | | | | |
| | 2 MHz - 10 MHz | 0.17 + 1 | 200 | | | | |
| | 10 MHz - 20 MHz | 0.30 + 1 | 200 | | | | |
| | 20 MHz - 30 MHz | 0.70 + 2 | 400 | | | | |
| | 30 MHz - 50 MHz [5] | 1.00 + 2 | 400 | | | | |
| 7 mV | 10 Hz - 30 Hz | 0.10 + 0 | 75 | 0.4 + 5 | 0.5 + 7 | 0.7 + 8 | 0.1 µV |
| | 30 Hz - 120 Hz | 0.05 + 0 | 75 | 0.4 + 5 | 0.5 + 7 | 0.7 + 8 | |
| | 120 Hz - 1.2 kHz | 0.05 + 0 | 75 | 0.4 + 5 | 0.5 + 7 | 0.7 + 8 | |
| | 1.2 kHz - 120 kHz | 0.05 + 0 | 75 | 0.4 + 5 | 0.5 + 7 | 0.7 + 8 | |
| | 120 kHz - 500 kHz | 0.07 + 1 | 75 | 0.4 + 5 | 0.5 + 7 | 0.7 + 8 | |
| | 500 kHz - 1.2 MHz | 0.07 + 1 | 75 | | | | |
| | 1.2 MHz - 2 MHz | 0.07 + 1 | 100 | | | | |
| | 2 MHz - 10 MHz | 0.1 + 1 | 200 | | | | |
| | 10 MHz - 20 MHz | 0.17 + 1 | 200 | | | | |
| | 20 MHz - 30 MHz | 0.37 + 1 | 300 | | | | |
| | 30 MHz - 50 MHz [5] | 0.5 + 1 | 300 | | | | |
| 22 mV | 10 Hz - 30 Hz | 0.10 | 75 | 0.4 + 10 | 0.5 + 13 | 0.7 + 16 | 0.1 µV |
| | 30 Hz - 120 Hz | 0.05 | 75 | 0.4 + 10 | 0.5 + 13 | 0.7 + 16 | |
| | 120 Hz - 1.2 kHz | 0.05 | 75 | 0.4 + 10 | 0.5 + 13 | 0.7 + 16 | |
| | 1.2 kHz - 120 kHz | 0.05 | 75 | 0.4 + 10 | 0.5 + 13 | 0.7 + 16 | |
| | 120 kHz - 500 kHz | 0.07 | 75 | 0.4 + 10 | 0.5 + 13 | 0.7 + 16 | |
| | 500 kHz - 1.2 MHz | 0.07 | 75 | | | | |
| | 1.2 MHz - 2 MHz | 0.07 | 75 | | | | |
| | 2 MHz - 10 MHz | 0.1 | 100 | | | | |
| | 10 MHz - 20 MHz | 0.17 | 100 | | | | |
| | 20 MHz - 30 MHz | 0.37 | 200 | | | | |
| | 30 MHz - 50 MHz [5] | 0.6 | 200 | | | | |

| Voltage [1] Range | Frequency Range | Flatness [2] 1 year ± 3 °C ± (% of Reading + µV) | Flatness [3] Temperature Coefficient ppm / °C | 0 °C to 50 °C [4] ± (% of Reading + µV) | | | Resolution |
|---|---|---|---|---|---|---|---|
| | | | | 90 Days | 1 Year | 2 Years | |
| 70 mV | 10 Hz - 30 Hz | 0.10 | 40 | 0.4 + 20 | 0.5 + 30 | 0.6 + 40 | 1.0 µV |
| | 30 Hz – 120 Hz | 0.05 | 40 | 0.4 + 20 | 0.5 + 30 | 0.6 + 40 | |
| | 120 Hz - 1.2 kHz | 0.05 | 40 | 0.4 + 20 | 0.5 + 30 | 0.6 + 40 | |
| | 1.2 kHz - 120 kHz | 0.05 | 40 | 0.4 + 20 | 0.5 + 30 | 0.6 + 40 | |
| | 120 kHz - 500 kHz | 0.05 | 40 | 0.4 + 20 | 0.5 + 30 | 0.6 + 40 | |
| | 500 kHz - 1.2 MHz | 0.05 | 40 | | | | |
| | 1.2 MHz - 2 MHz | 0.05 | 75 | | | | |
| | 2 MHz - 10 MHz | 0.1 | 100 | | | | |
| | 10 MHz - 20 MHz | 0.15 | 100 | | | | |
| | 20 MHz - 30 MHz | 0.35 | 200 | | | | |
| | 30 MHz - 50 MHz [5] | 0.6 | 200 | | | | |
| 220 mV | 10 Hz - 30 Hz | 0.10 | 40 | 0.3 + 60 | 0.4 + 80 | 0.5 + 100 | 1.0 µV |
| | 30 Hz - 120 Hz | 0.04 | 40 | 0.3 + 60 | 0.4 + 80 | 0.5 + 100 | |
| | 120 Hz - 1.2 kHz | 0.04 | 40 | 0.3 + 60 | 0.4 + 80 | 0.5 + 100 | |
| | 1.2 kHz - 120 kHz | 0.04 | 40 | 0.3 + 60 | 0.4 + 80 | 0.5 + 100 | |
| | 120 kHz - 500 kHz | 0.04 | 40 | 0.3 + 60 | 0.4 + 80 | 0.5 + 100 | |
| | 500 kHz - 1.2 MHz | 0.05 | 40 | | | | |
| | 1.2 MHz - 2 MHz | 0.05 | 75 | | | | |
| | 2 MHz - 10 MHz | 0.1 | 100 | | | | |
| | 10 MHz - 20 MHz | 0.15 | 100 | | | | |
| | 20 MHz - 30 MHz | 0.35 | 200 | | | | |
| | 30 MHz - 50 MHz [5] | 0.6 | 200 | | | | |
| 700 mV | 10 Hz - 30 Hz | 0.10 | 40 | 0.3 + 200 | 0.4 + 300 | 0.5 + 400 | 10.0 µV |
| | 30 Hz - 120 Hz | 0.03 | 40 | 0.3 + 200 | 0.4 + 300 | 0.5 + 400 | |
| | 120 Hz - 1.2 kHz | 0.03 | 40 | 0.3 + 200 | 0.4 + 300 | 0.5 + 400 | |
| | 1.2 kHz - 120 kHz | 0.03 | 40 | 0.3 + 200 | 0.4 + 300 | 0.5 + 400 | |
| | 120 kHz - 500 kHz | 0.03 | 40 | 0.3 + 200 | 0.4 + 300 | 0.5 + 400 | |
| | 500 kHz - 1.2 MHz | 0.05 | 40 | | | | |
| | 1.2 MHz - 2 MHz | 0.05 | 75 | | | | |
| | 2 MHz - 10 MHz | 0.1 | 100 | | | | |
| | 10 MHz - 20 MHz | 0.15 | 100 | | | | |
| | 20 MHz - 30 MHz | 0.35 | 200 | | | | |
| | 30 MHz - 50 MHz [5] | 0.6 | 200 | | | | |
| 2.2 V | 10 Hz - 30 Hz | 0.10 | 40 | 0.3 + 300 | 0.35 + 400 | 0.4 + 500 | 10.0 µV |
| | 30 Hz - 120 Hz | 0.03 | 40 | 0.3 + 300 | 0.35 + 400 | 0.4 + 500 | |
| | 120 Hz - 1.2 kHz | 0.03 | 40 | 0.3 + 300 | 0.35 + 400 | 0.4 + 500 | |
| | 1.2 kHz - 120 kHz | 0.03 | 40 | 0.3 + 300 | 0.35 + 400 | 0.4 + 500 | |
| | 120 kHz - 500 kHz | 0.03 | 40 | 0.3 + 300 | 0.35 + 400 | 0.4 + 500 | |
| | 500 kHz - 1.2 MHz | 0.05 | 40 | | | | |
| | 1.2 MHz - 2 MHz | 0.05 | 75 | | | | |
| | 2 MHz - 10 MHz | 0.1 | 100 | | | | |
| | 10 MHz - 20 MHz | 0.15 | 100 | | | | |
| | 20 MHz - 30 MHz | 0.35 | 200 | | | | |
| | 30 MHz - 50 MHz [5] | 0.6 | 200 | | | | |

| Voltage [1] Range | Frequency Range | Flatness [2] 1 year ± 3 °C ± (% of Reading + µV) | Flatness [3] Temperature Coefficient ppm / °C | 0 °C to 50 °C [4] ± (% of Reading + µV) | | | Resolution |
|---|---|---|---|---|---|---|---|
| | | | | 90 Days | 1 Year | 2 Years | |
| 7 V | 10 Hz - 30 Hz | 0.10 | 40 | 0.3 + 500 | 0.35 + 800 | 0.4 + 1000 | 100.0 µV |
| | 30 Hz - 120 Hz | 0.03 | 40 | 0.3 + 500 | 0.35 + 800 | 0.4 + 1000 | |
| | 120 Hz - 1.2 kHz | 0.03 | 40 | 0.3 + 500 | 0.35 + 800 | 0.4 + 1000 | |
| | 1.2 kHz - 120 kHz | 0.03 | 40 | 0.3 + 500 | 0.35 + 800 | 0.4 + 1000 | |
| | 120 kHz - 500 kHz | 0.03 | 40 | 0.3 + 500 | 0.35 + 800 | 0.4 + 1000 | |
| | 500 kHz - 1.2 MHz | 0.05 | 40 | | | | |
| | 1.2 MHz - 2 MHz | 0.05 | 75 | | | | |
| | 2 MHz - 10 MHz | 0.1 | 100 | | | | |
| | 10 MHz - 20 MHz | 0.15 | 100 | | | | |
| | 20 MHz - 30 MHz | 0.35 | 200 | | | | |
| | 30 MHz - 50 MHz [5],[6] | 0.6 | 200 | | | | |

[1] Range limits same as INPUT 1 or INPUT 2.
[2] Relative to 1 kHz, for 2-year specification multiply by 1.5.
[3] Add to flatness specifications when more than 3 °C from calibration temperature.
[4] At input connector.
[5] Applies to 5790B/5 & 5790B/AF only.
[6] Maximum amplitude is limited to 3.5 V.

**Wideband Characteristics**

Maximum Non-Destructive Input ..... 10 V rms
Guard Isolation ..... 0.5 V peak
Input Impedance
1 kHz..... 50 Ω (± 0.5 %)
VSWR ..... <1.05 typical

**5790B/AF**

The 5790B/AF absolute specification is ±0.23 % of voltage reading (1 year, 23 °C ±3 °C, 95 % confidence level (k=2), normally distributed). Specification applies to 50 MHz, 223.61 mV, referenced to the end of the provided serialized 0.91 meter (3 ft) cable. When using the cable and 50 MHz Cable Correction, other ranges and frequencies can be measured but the Product is only specified within ±4 % of 50 MHz, 223.61 mV (214.66 mV to 232.55 mV).

# Chapter 2
# Installation

**⚠⚠Warning**

**To avoid electric shock and to conform to IEC Safety Class I, use the Product only with sources up to 1000 V dc or rms ac that are protected from short circuit with current-limiting to 200 mA or less.**

## Introduction

This chapter provides instructions for installing the Product and connecting it to line power. Because this chapter explains fusing and operating environment requirements, you should read this chapter before operating the instrument. Instructions for connecting cables to other standards and to a UUT (Unit Under Test) during operation are in Chapter 4.

## Unpacking and Inspection

The Product ships in a container that prevents shipping damage. Inspect the Product carefully for damage, and immediately report any damage to the shipper. Instructions for inspection and claims are included in the shipping container.

When the Product is unpacked, check for all the standard equipment listed in Table 2-1 and check the shipping order for additional items ordered. Report any shortage to the place of purchase or to the nearest Fluke Calibration Service Center. See *How to Contact Fluke Calibration* if necessary. If performance tests are required for your acceptance procedures, refer to the Product service manual for instructions.

Line power cords available from Fluke are listed in Table 2-2 and illustrated in Figure 2-1.

**Table 2-1. Standard Equipment**

| Item | Model or Part Number |
|---|---|
| AC Measurement Standard | 5790B |
| Mains Power Cord | See Table 2-2 and Figure 2-1 |
| Type "N" Extender (protects connector) | 875443 |
| 5790B Manual CD<br>(Containing the Operators Manual) | 4557940 |
| Certificate of Calibration | N/A |

## Environmental and Input Requirements

For full accuracy, the Product must be used in an ambient temperature within ±5 °C (±3 °C in Wideband) of the temperature of the last calibration. At any time during operation, the absolute uncertainty for the present input, and the number of days since the last verification is shown at the top of the measurement screen. To operate the Product outside the specified temperature range, refer to the Specifications in Chapter 1 for information about temperature coefficients.

*Note*

*Inputs are protected from overloads on all ranges, but sources connected to the Product must be current-limited to 200 mA or less, be below 1000 V dc or rms ac, and be free of high-energy transients.*

## Placement and Rack Mounting

You can place the Product on top of a workbench or mount it in a standard 19-inch wide, 24-inch (61-cm) deep equipment rack. For bench-top use, the Product is equipped with non-slipping, non-marring feet. To mount the Product in an equipment rack, order the accessory Y-5737 Rack Mount Kit. The rack mount kit comes with rack ears, 24-inch slides, fasteners, and an instruction sheet.

**⚠⚠Warning**

**To prevent possible electrical shock, fire, or personal injury, do not restrict access to the Product mains power cord. The mains power cord is the mains disconnecting device. If access to the power cord is inhibited by rack mounting, a properly rated accessible mains disconnecting switch must be provided within reach as part of the installation.**

The area around the air filter must be at least 3 inches from nearby walls or rack enclosures.

The exhaust perforations on the sides of the Product must be clear of obstructions for 3 inches.

## Cooling Considerations

**⚠ Caution**

**Damage caused by overheating can occur if the area around the air intake or exhaust exit is restricted, the intake air is too warm, or the air filter becomes clogged.**

A hidden but important feature of the Product is its internal cooling system. Baffles direct cooling air from the fans throughout the chassis to internally dissipate heat during operation. The accuracy and dependability of all internal parts of the Product are enhanced by maintaining the coolest possible internal temperature. Adhere to these rules to lengthen the life of the Product and enhance its performance:

- The area around the air filter must be at least 3 inches from nearby walls or rack enclosures.
- The exhaust perforations on the sides of the Product must be clear of obstructions.
- The air entering the instrument must be room temperature. Make sure that exhaust from another instrument is not directed into the fan inlet.
- Clean the air filter every 30 days or more frequently if the Product is operated in a dusty environment. (Instructions to clean the air filter are in Chapter 7.)

## Grounding the Product

The Product uses controlled overvoltage techniques that require the Product to be grounded whenever normal mode or common mode ac voltages or transient voltages may occur. The enclosure must be grounded through the grounding conductor of the power cord, or through the rear panel ground binding post.

## Mains Voltage Selection

The Product automatically detects the main line voltage when powered up and configures itself to work at that voltage level. Nominal mains voltages ranging from 100 Vrms to 120 Vrms and from 220 Vrms to 240 Vrms (±10 %) are acceptable, with frequencies from 47 Hz to 63 Hz.

The Product comes with the appropriate line power plug for the country of purchase. If a different type is necessary, refer to Table 2-2 and Figure 2-1. They list and show the mains line power plug types available from Fluke Calibration.

**Table 2-2. Line Power Cord Types Available from Fluke**

| Type | Fluke Option Number |
|---|---|
| North America | LC-1 |
| Universal Euro | LC-3 |
| United Kingdom | LC-4 |
| Switzerland | LC-5 |
| Australia | LC-6 |
| South Africa | LC-7 |
| Brazil | LC-42 |

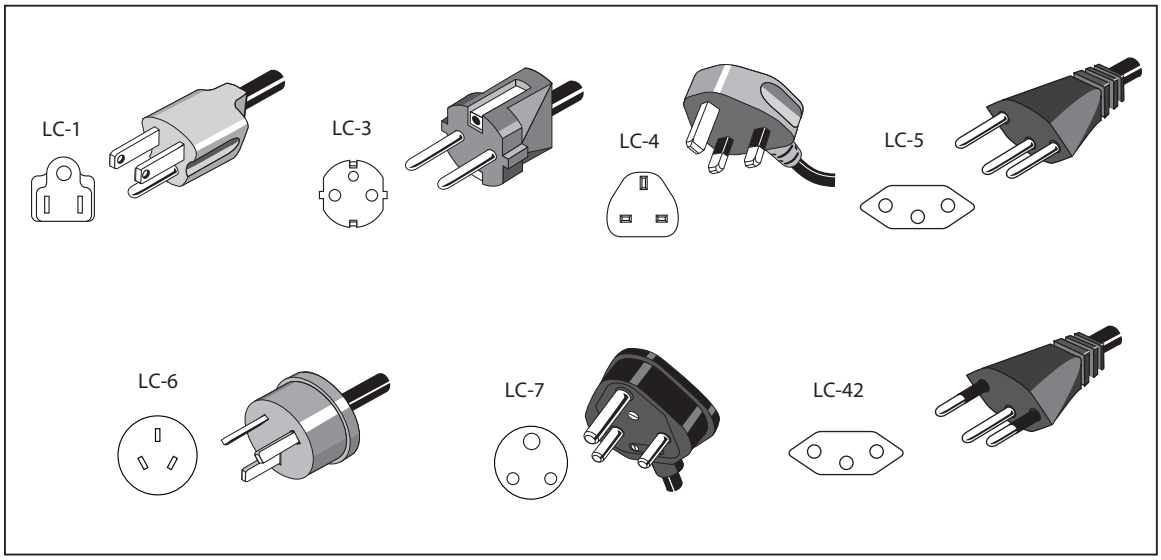


hhp004.eps

**Figure 2-1. Line Power Cord Types Available from Fluke**

# Connect to Mains Power

**⚠⚠Warning**

**To avoid shock hazard, connect the factory supplied three-conductor mains power cord to a properly grounded power outlet. Do not use a two-conductor adapter or extension cord, as it will break the protective ground connection.**

**If a two-conductor mains power cord must be used, a protective grounding wire must be connected between the ground terminal and earth ground before you connect the mains power cord or operate the Product.**

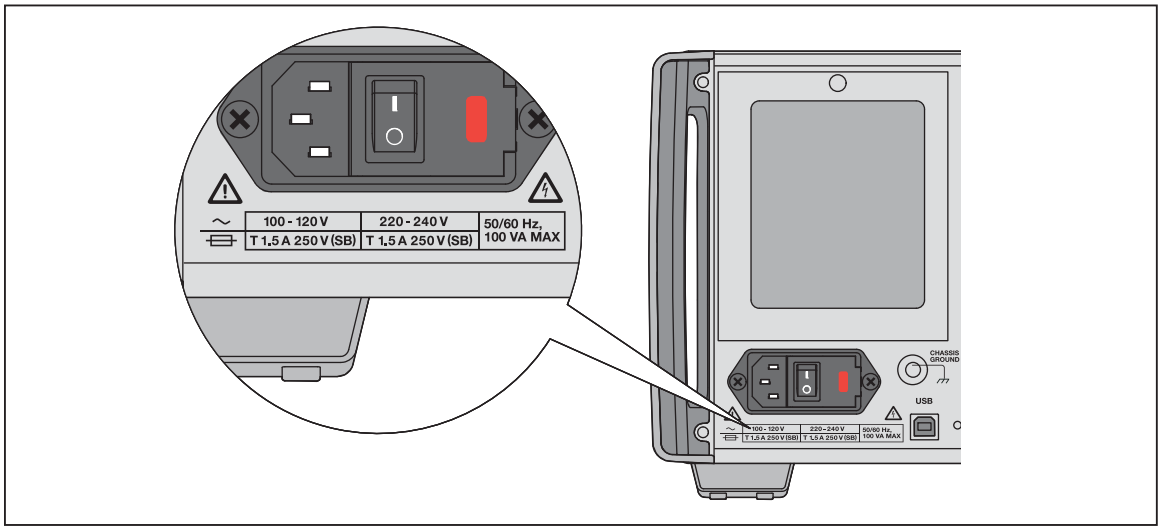


hvi005.eps

**Figure 2-2. Line Power Label and Switch Location**

# Chapter 3
# Features

## Introduction

This chapter is a reference for the functions and locations of the front and rear panel features. It also provides descriptions of each feature. Read this information before you use the Product. Front-panel operation instructions for the Product are in Chapter 4. Remote operation instructions are in Chapter 5.

## Front Panel Features

Front-panel features (including all controls, display, indicators, and terminals) are shown in Figure 3-1. Table 3-1 briefly describes each front-panel feature.

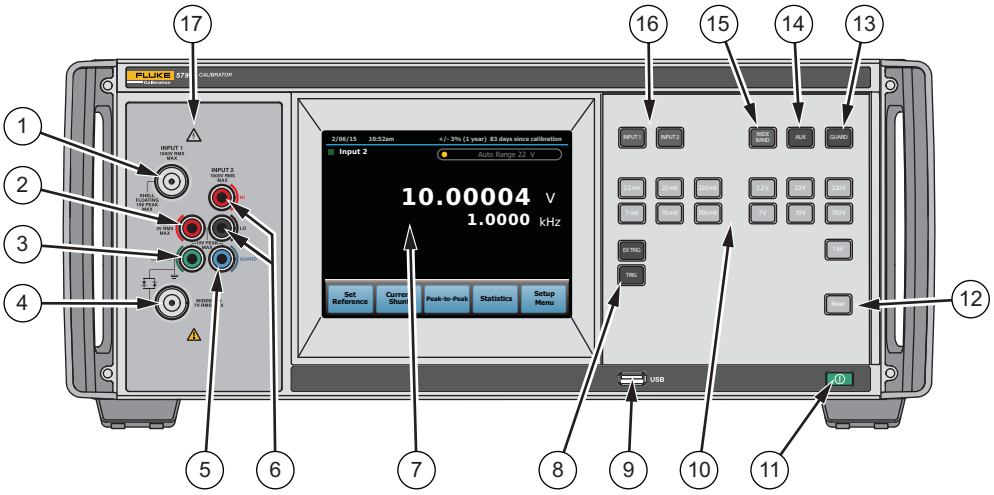


hvi006.eps

**Figure 3-1. Front Panel**

**Table 3-1. Front Panel Features**

| Ref No. | Name | Function |
|---|---|---|
| 1 | INPUT 1 Type "N" Connector | A Type "N" connector for dc (1000 V max) or ac (to 1 MHz, 1000 V max) inputs. For manual transfer applications that use the Product with external dc and ac sources, use the INPUT 2 binding posts for the dc source. |
| 2 | AUX Binding Post | Connection point for a Fluke Model A40 or A40A Binding Post Current Shunt adapter.<br>*Note*<br>*The AUX terminal is only to be used with the A40 and A40A shunts. See* Current Shunt Function *in Chapter 4 for more information.* |
| 3 | GROUND Binding Post | If the Product is the location of the ground reference point in a system, the GROUND binding post can be used to connect other instruments to earth ground. The chassis is normally connected to earth ground through the three-conductor line cord instead of through the earth ground binding post. Refer to Chapter 4 for details. |
| 4 | WIDEBAND 50 Ω Type "N" Connector [1] | A 50 Ω Type "N" connector for inputs in Wideband mode (10 Hz to 30 MHz -Option 5790B/3 or 50 MHz - Option 5790B/5 or 5790B/AF, 7 V rms max). This connector is only used when an optional Wideband Module is installed. |
| 5 | GUARD Binding Posts [1] | The GUARD binding post provides an external Binding Post connection point for the internal guard or a floating shield around sensitive measurement circuitry. See Chapter 4 for proper use of the GUARD. The maximum allowable potential between the GUARD binding post and chassis ground is 10 V pk. |
| 6 | INPUT 2 Binding Post | A pair of five-way binding posts for connection to a binding external dc source (1000 V max), or to an ac source posts (1000 V rms max). |
| 7 | Touch Screen Display | The color touch-sensitive display shows the amplitude, frequency, and other active conditions and messages. The lower section of the display provides controls not available with the keys alone. The Product interface is made up of multiple menus, described in Chapter 4. |
| 8 | TRIG and EX TRIG keys | EX TRIG (External Trigger) key turns off continuous trigger mode. When the key is pushed, the Ext Trigger ON indicator is shown in the upper corner of the display, and the Product stops taking continuous measurements at the active input. When the Ext Trigger indicator is off, the Product automatically takes measurements one after another.<br>When Ext Trigger is ON, the TRIG key triggers a single measurement at the active input. In continuous trigger mode, the TRIG aborts the current measurement cycle and triggers a new measurement.<br>See *Selecting Continuous or External (Single) Trigger* in Chapter 4. |

**Table 3-1. Front Panel Features (cont.)**

| Ref No. | Name | Function |
|---|---|---|
| ⑨ | Front USB Port | Insert a USB thumb drive into this port to save Calibration reports and update the Product firmware. |
| ⑩ | Range Keys | These keys select a specific range and lock the numeric range (turning off auto ranging if active). Select the **Auto Range** or **Range Lock** softkeys on the display to return to auto ranging after the range is locked. See *Selecting Auto or Locked Range* in Chapter 4. |
| ⑪ | Power button | Push the lighted power button to turn on or off the Product. See the Master ON/OFF Switch description below. |
| ⑫ | Reset key | Push to return the Product to its initial power-up state. |
| ⑬ | Guard Key (External Guard) | Opens and closes an internal connection between the GUARD and the INPUT 1 shell or INPUT 2 LO binding post depending on which input is selected.<br>The Product powers up with the internal GUARD connection closed.<br>Push to open the internal GUARD connection (the Guard ON indicator shows in the upper corner of the display). Also see *GUARD binding post*. |
| ⑭ | AUX key | Selects the AUX and INPUT 2 LO binding posts as the active input. These binding posts are only for connection through the accessory 5790A-7001 adapter cable to a Fluke A40 or A40A shunt. |
| ⑮ | Wideband key | Selects the WIDEBAND 50 Ω Type "N" connector as the active input, but only if a 5790B/3 or 5790B/5 Wideband Module option is installed. This key generates a beep if no Wideband Module is installed. |
| ⑯ | INPUT 1 and 2 keys | INPUT 1 key: Selects the INPUT 1 Type "N" connector as the active input.<br>INPUT 2 Key: Selects the INPUT 2 binding posts as the active input. |
| ⑰ | Hazardous Voltage indicator | This symbol lights up to show that hazardous voltage ( ≥22 V) is (or may be) present. This symbol lights up when voltages >22 V are present on the terminals and is always illuminated when using the high voltage ranges (220 V, 700 V, and 1K V). |
| [1] Visual Connection Management Terminals™. The appropriate terminals light up in green to show the proper connection points depending on the input selected. The lights offer visual guidance for cable connections for specific functions, protect the user by indicating which terminals are active, and protect the Product from damage from incorrect connections. | | |

## Rear Panel Features

Rear-panel features (including all terminals, sockets, and connectors) are shown in Figure 3-2. Table 3-2 briefly explains each rear-panel feature.

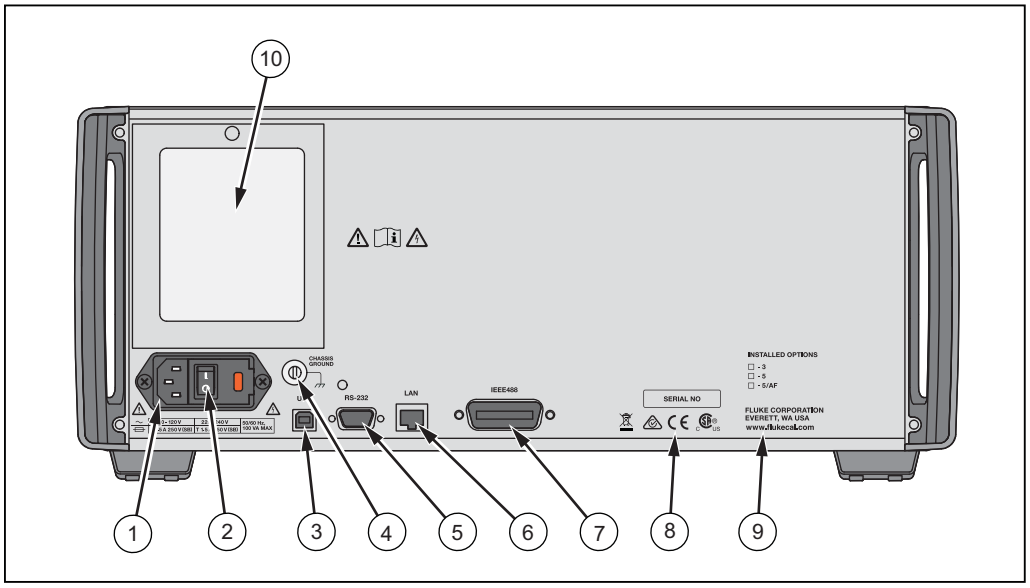


hvi007.eps

**Figure 3-2. Rear Panel**

**Table 3-2. Rear Panel Features**

| Ref No. | Name | Function |
|---|---|---|
| ① | AC PWR INPUT Connector | A grounded male three-prong connector for the mains power cord. |
| ② | Master ON/OFF Switch | This switch must be in the ON (I) position before the soft power button on the front panel will function. |
| ③ | Rear USB Port | USB port for remote control of the Product. Chapter 5 describes how to connect to the USB interface. See Chapter 6 for remote programming instructions. |
| ④ | Chassis Ground Binding Post | A binding post that is internally grounded to the chassis. If the Product is the location of the ground reference point in a system, this binding post can be used to connect other instruments to earth ground. (The chassis is normally connected to earth ground through the three-conductor line cord instead of through the earth ground binding post.) See Chapter 4 for details. |
| ⑤ | RS 232 Connector | A male (DTE) serial port connector for remote control of the Product. Chapter 5 describes proper cabling and how to set up the Serial interface and connect to it. See Chapter 6 for remote programming instructions. |
| ⑥ | Ethernet Connector | 10/100/1000 Base/T Ethernet connector for remote control of the Product. Chapter 5 describes proper cabling, how to set up the interface, and how to transmit data from the Product. Chapter 5 also describes how to use the Ethernet interface for remote control. See Chapter 6 for remote programming instructions. |
| ⑦ | IEEE-488 Connector | A standard interface connector to operate the Product in remote control as a Talker or Listener on the IEEE-488 Bus. See Chapter 5 for bus connection. See Chapter 6 for remote programming instructions. |
| ⑧ | Serial Number | The Product Serial Number |
| ⑨ | Installed Options | Selected box indicates the options installed in the Product. |
| ⑩ | Fan Filter | The filter covers the air intake to keep dust and debris out of chassis. Fans inside the Product provide a constant cooling air flow throughout the chassis. Circuitry inside the Product monitors correct operation of the internal fans. |

# Chapter 4
# Front Panel Operation

## Introduction

This chapter explains front-panel operation. Controls, the display, and terminals are described in detail in Chapter 3. Remote interface setups are explained in Chapter 5. The first part of this chapter is general and applies to all modes of operation.

Operating instructions are presented separately for measurement mode and transfer mode. See *Instructions for Measurement Mode* to measure ac voltage as you would with an ac voltmeter. See *Instructions for Transfer Mode* to apply external standards to the Product and use it as a transfer standard.

Different uncertainty specifications apply to measurement mode and transfer mode, as listed in Chapter 1. Use the specifications to help determine which mode of operation is best for your application.

In measurement mode, the Product uses its internal dc reference and software control to automatically make a transfer and show the measured rms voltage of a signal at the input. In transfer mode, the uncertainty contributed by the Product is smaller because the instrument simply compares inputs and presents the difference between the two. The Product is exceptionally accurate in detecting the difference in levels between rms ac and dc voltages applied to its inputs.

## Turning on the Product

**⚠⚠Warning**

**To avoid electric shock, make sure the Product is safely grounded.**

Make sure the rear power switch is on and then push ⏻ to turn on the Product. During the power-up process, the Product undergoes thorough self tests. It takes approximately 50 seconds to complete its power-up process. If a self test fails, a prompt on the display identifies the failed test and prevents further operation of the instrument.

## Power-Up State

After passing power-up self tests and any time Reset is pushed, the Product goes into the power-up state. The only power-up setting that is non-volatile (saved when the power is turned off) is the Initial Input setting. When you turn on the power or push Reset (with no stimulus attached), the Product auto ranges down to one of the lowest ranges.

At any time during front panel operation, you can return the Product to the power-up state by pushing Reset. Table 4-1 summarizes the power-up state settings. Most instrument parameters that you can set are saved in memory until you clear non-volatile memory with a restore to factory default operation. Table 4-2 summarizes the non-volatile setup parameters and their factory defaults.

## Warmup Requirements

Make sure the Product is warmed up before use. After initial turn-on, warm up the Product for 30 minutes to allow the environmentally-controlled components inside to stabilize. You can use the Product right away, but a 30-minute warm-up period is required to ensure that the Product meets or exceeds the specifications listed in Chapter 1.

If you turn off the Product after it has warmed up, allow it to warm up again for at least twice the length of time it was turned off (up to a maximum of 30 minutes of warm up). For example, if the Product is turned off for 10 minutes, allow it to warm up again for at least 20 minutes.

**Table 4-1. Power-Up State Defaults and Volatility**

| Operating State | Factory Default (Setting after Non-Volatile Memory Restore) | Volatile? (Reset at Power Up) |
|---|---|---|
| Range | 1 kV | Yes |
| Auto/Lock Range | AUTO | Yes |
| EX TRIG | OFF (continuous trigger) | Yes |
| EX GRD | OFF (internal) | Yes |
| Digital Filter Mode | OFF | Yes |
| Digital Filter Restart Threshold | MEDIUM | Yes |
| Initial Input | INPUT 2 | No |
| Hi Res | OFF | Yes |
| Reference | None | Yes |
| Reference Delta Units | PPM | Yes |

**Table 4-2. Non-volatile Setup Parameter Factory Defaults**

| Setup Parameter | Factory Default (Value after Non-Volatile Memory Format) |
|---|---|
| Cal Interval | 1 YEAR |
| Remote Port | GPIB |
| IEEE-488 Bus (GPIB) Address | 6 |
| EOF Characters | FF, NUL |
| Baud Rate | 9600 baud |
| Data Bits | 8 |
| Stop Bits | 1 |
| Parity | None |
| Stall Protocol | XON/ XOFF |
| Serial Port Remote Interface Mode | Terminal |
| EOL Characters (RS-232) | CRLF |
| User Report String (*PUD in remote) | 5790B |
| Real Time Clock Date | Not changed |
| Real Time Clock Time | Not changed |
| Date Format | M/D/Y |

## *Calibrating DC Zeros*

DC zeros is a quick, automatic process that removes dc offset errors on all ranges and optimizes internal settling parameters to improve measurement speed. Specifications require that you do the dc zero calibration every 30 days. In addition, do the dc zero calibration after powering up the Product for the first time after unpacking following a shipment or if it is exposed to an environmental change of greater than 5 °C. An automatic prompt will be shown to run the DC Zero calibration 30 days after the last zero was performed.

To execute zeros calibration, from the power-up state:

*Note*

*The DC Zero function is affected by the calibration security state.*

1. Push the **Setup Menu>Calibration** softkeys followed by the **Run Zero Cal** softkey. The display shows the progress of zero calibration with the name of each part of the procedure. The numbers at the right side (for example, "8/19") give an indicator of the percentage of completion. In a short time, zeros calibration is finished. The display indicates when the calibration procedure is complete.
2. To resume normal operation, touch **OK** and **Exit**.

# Setup Menu

## Setup Menu Softkey

Push the **Setup Menu** softkey to call up the top-level utilities menu, which provides softkeys for calibration, diagnostics, instrument setup, system settings and measurement control. Most parameters are saved in memory until they are changed, including power-off periods. See Tables 4-1 and 4-2 for a summary.

When you push **Setup Menu**, the display shows the top-level utilities menu:

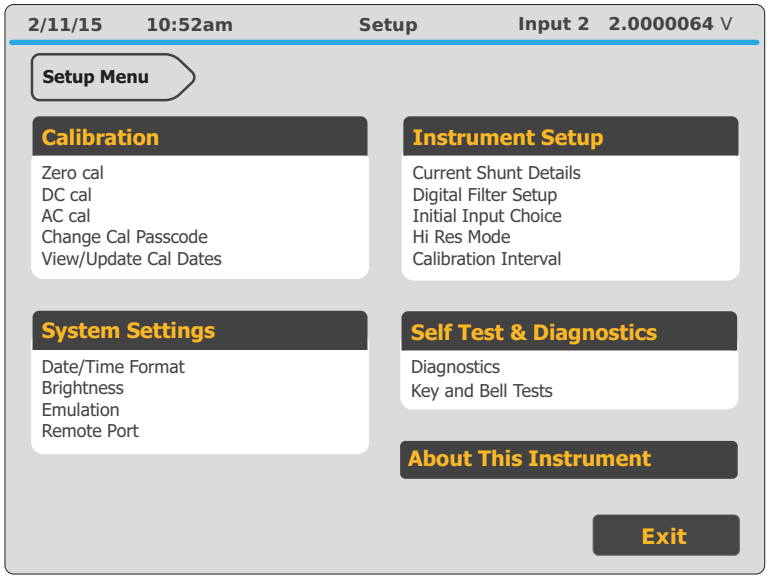


hvi020.eps

The list below describes submenus accessed through each softkey and tells you where to find further information in the manuals.

- Calibration: Opens the calibration menu. Softkeys in this menu execute dc zeros calibration, as previously described, and control the semi-automated calibration procedure. Items in this menu: show calibration date information and change the calibration passcode (after you unsecure the Product by entering the current passcode). DC zeros calibration is described earlier in this chapter.
- System Settings: This menu contains softkeys to set up the remote ports, set the clock, control instrument brightness, and set the instrument emulation mode. *System Settings Menu* describes how to use these softkeys.
- Instrument Setup: This menu contains softkeys to open submenus that let you change the calibration interval, control the Digital Filter (a software window-averaging filter), select either INPUT 1 or INPUT 2 as the initial input, and select Hi Res mode. This menu also contains the Current Shunt Details menu used to add, edit, and remove current shunt information. Refer to *Instructions for Current Measurements* for more information.

- Self Tests & Diagnostics: Opens the self tests and diagnostics menu. This menu contains softkeys to execute the power-up tests/instrument diagnostics, and interactive tests for verifying the bell and keys. Push Reset at any time to abort the diagnostic tests.
- About This Instrument: Accesses a menu that shows a list of installed hardware modules and software version numbers.

## Checking Instrument Configuration

To view the instrument configuration information:

1. Push **Setup Menu**>**About This Instrument** softkey. The display shows:

   **Software Information:**

   - Main SW Version
   - Inguard SW Version
   - Serial Number

   And

   **Hardware Information:**

   - Installed Hardware Assemblies
2. Push the **Software Information** softkey to view the software version. The "Main" software revision refers to software in flash on the A20 CPU assembly. The "Inguard" software revision refers to software in flash on the A17 Guard Crossing/Regulator assembly. Other various revisions/dates are shown for different devices in the Product. Push the **Exit** softkey to exit this screen.
3. Push the **Hardware Information** softkey. This shows the options installed in your Product. Push the **Close** softkey to exit this screen.
4. To resume operation, push the **Exit** softkey.

## System Settings Menu

The submenus in the Setup menu (accessed by pushing the **System Settings** softkey in the Setup menu) contain:

**Date/Time:**

Accesses softkeys that allow you to check and set the date and time for the clock/calendar. This section describes how to set the time and date under the heading *Setting the Internal Clock/Calendar.*

**Brightness:**

Adjust the display brightness.

**Emulation:**

Emulates a 5790A over the remote interface. This changes the model number in the *IDN? response. This menu is self-explanatory.

**Remote Port:**

Chapter 5 describes how to set up the IEEE-488 interface, USB, Ethernet and RS-232 serial interface.

## Setting the Internal Clock/Calendar

An internal clock provides the date (corrected for leap years) and time to the Product CPU (Central Processing Unit). Check the clock setting and set it if necessary.

*Note*

*A long-life battery keeps the clock running during power-off periods. If the battery in your Product should ever need replacement, see the Service Manual. The battery is a button type that is installed on the CPU Assembly (A20). Any procedure that involves removing the cover must performed only by qualified service personnel.*

To set or change the time and date of the internal clock:

1. To set the date or both date and time, unsecure the Product using the security passcode.
2. Push the **Setup Menu**>**System Settings** and **Date/Time** softkeys. The display changes to the Date/Time menu.
3. There are multiple choices for the date display format. The active format is identified under **Date Format**. Push **Date Format** to change the date display format to one of the following choices:
   - M/D/Y, for example, 3/05/2015 for March 5, 2015.
   - D.M.Y., for example, 5.03.2015 for March 5, 2015.
   - YMD, for example, 20150305 for March 5, 2015. This format is typical for computer program use.
4. The choices available under the **Date/Time** softkey are DAY, MONTH, YEAR, HOUR, MINUTE, and SECOND. To make changes, touch the appropriate field (for example, **Month**) and using the numeric keypad, enter the new value. Push **Done** when complete. If you make a mistake, use the **Delete** softkey to make a correction. To exit the entry window, push **Cancel**.

   *Note*

   *Time is shown in 24-hour format and includes leading zeros.*

5. When finished setting the clock, push Exit.

### Instrument Specification

At any time during front panel operation, you can confirm the specification of the voltage measurement. When using the current shunt mode, the specification shown is the voltage specification and not that of the calculated current measurement (see *Instructions for Current Measurements*). The specification is shown at the top of the display in addition to the Calibration Interval and number of days since the last verification at all times. An example of the display is shown below.

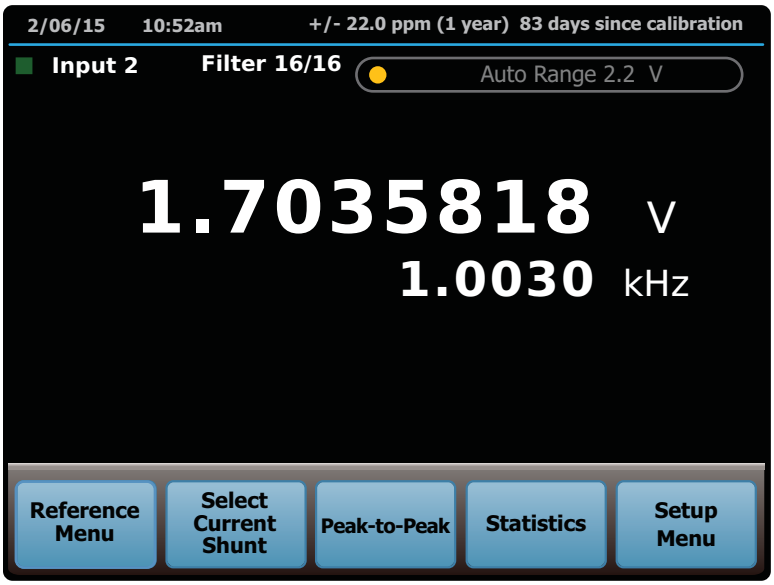


hvi004.eps

*Note*

*For INPUT 1 OR 2, the specification shown is the measurement mode absolute specification. For WIDEBAND, the specification shown is the total uncertainty including flatness. For the AUX input, no specification is shown. The days since verification relates to the verification procedure for the active input (Periodic or WIDEBAND).*

## Connecting Sources to the Product

**⚠Caution**

**To avoid dielectric breakdown, use only cables and connectors that have voltage ratings higher than the voltages you will be applying.**

Connect the source to be measured to the INPUT 1 50 Ω Type "N" connector or the INPUT 2 binding posts. For the best measurement quality, use a coaxial cable and INPUT 1 for input frequencies >300 kHz (refer to Table 4-3). For more information, refer to the Fluke Calibration application note *How Cables and Connectors Impact Measurement Uncertainty*. Cable recommendations depend on the INPUT connector used and the input amplitude and frequency. Table 4-3 gives test lead and INPUT connector recommendations for different applications.

## Test Leads and Connectors

Make sure cables and connectors are rated for the voltage that will be used. Either coaxial or twisted-pair shielded test leads with low-thermal emf connectors are the best choice. Use short leads to minimize test lead loading. Verify that test lead loading will not affect your measurement by checking the input impedance information in Table 4-4. Refer to *Loading* later in this chapter for more information.

### Coaxial Inputs

**⚠⚠Warning**

**The type "N" connector shells are connected to circuit low and can float to hazardous voltages if the input is connected incorrectly.**

Use coaxial cable and 50 Ω Type "N" connectors when attaching cables to INPUT 1 and the WIDEBAND coaxial input connectors. Coaxial cable and “N” connectors minimize the possibility that radiated electromagnetic energy will disrupt sensitive measurements. Use the shortest possible length of coaxial cable. Be aware that if you do add a length of cable, you calibrate the source to the end of the cable.

### Dual Binding Inputs

You can connect test leads to the Product INPUT 2, GUARD, and GROUND binding posts using banana plugs, spade lugs, or stripped insulated wire. Make all screw-on connections tight. To avoid errors induced by thermal voltages (thermal emfs), use connectors and conductors made of copper or materials that generate small thermal emfs when joined to copper. Avoid using nickel-plated connectors. Use Fluke Model 5440A-7002 Low Thermal EMF Test Leads for optimal results.

**Table 4-3. Input Test Lead Summary**

| Input Connector | Input Frequency | | | |
|---|---|---|---|---|
| | dc to 100 kHz | 100 to 300 kHz | 300 kHz to 1 MHz | 1 to 50 MHz |
| INPUT 1 TYPE "N" | Coax any Length | Coax Up to 3 ft (1 m) | Coax Up to 1 ft (0.3 m) | N/A |
| INPUT 2 BINDING POSTS | Twisted-pair or coax any length | Twisted-pair or coax up to 3 Ft. | Twisted-pair or coax up to 1 ft (0.3 m) | N/A |
| WIDEBAND TYPE "N” | RG-58/U, 3 ft (1 m) | | | |

**Table 4-4. Input Impedance Summary**

| Input Range | Inputs 1 and 2 | Wideband Input |
|---|---|---|
| 1000 V | 500 kΩ | N/A |
| 700 V | 500 kΩ | N/A |
| 220 V | 50 kΩ | N/A |
| 70 V | 50 kΩ | N/A |
| 22 V | 50 kΩ | N/A |
| 7 V | 50 kΩ | 50 Ω |
| 2.2 V | 10 MΩ | 50 Ω |
| 700 mV | 10 MΩ | 50 Ω |
| 220 mV | 10 MΩ | 50 Ω |
| 70 mV | 10 MΩ | 50 Ω |
| 22 mV | 10 MΩ | 50 Ω |
| 7 mV | 10 MΩ | 50 Ω |
| 2.2 mV | 10 MΩ | 50 Ω |

## Connecting the Guard and Ground Binding Posts

*Note*

*The following information applies to INPUT 1, INPUT 2, and the AUX input only. It does not apply to the WIDEBAND input. Once you connect a coaxial cable to the Wideband option, no other connections are required.*

Ground currents can occur if instruments are not connected properly, resulting in often subtle measurement errors. In any system of measurement instruments, the basic rule is that all instruments should be grounded at a single common point. If an instrument in the system has a grounded input or output, select it as the common earth ground point for all the grounds in the system. Otherwise, use the ac voltage source used in the system (if there is one) as the common ground point for all the instruments.

For more information about grounding and guarding, refer to Grounding and Shielding Techniques in Instrumentation, by Ralph Morrison, fifth edition ©2007, John Wiley & Sons.

### *Guard Theory*

The GUARD is an electrical shield around the sensitive analog circuitry, insulated from chassis ground and the rest of the Product. The GUARD provides a low-impedance path for common-mode noise and ground currents. The guard reduces the chance of ground currents in the signal leads caused by powering interconnected instruments from ac outlets at different ground potentials.

### *Guard Connection*

The GUARD is internally connected to the INPUT 1 connector shell or the INPUT 2 LO binding post in this configuration. The GUARD binding post is disconnected from the internal guard. This is the normal power-up state of the Product, and is selected by pushing GUARD so that the **Guard** indicator on the display is off.

Make most measurements with the external guard configuration. To prevent errors due to common mode signals, especially at higher frequencies where the guard becomes less effective, use the steps below. See Figure 4-1 for the test lead connections to test a measuring instrument. See Figure 4-2 for the test lead connections to test a source. Both illustrations show recommended ways to connect to a source, and to connect to a source and other measuring device.

The guides in Figure 4-1 are identified by number:

1. Use short-signal connections to reduce the impedance in the signal return path and to reduce the current due to capacitive loading.
2. Use relatively low-capacitance coaxial cable for connections to reduce the return currents due to capacitive loading.
3. If attenuation is used, attenuate near the source.
4. Select the external Guard on the Product. Connect the GUARD of the Product to the GUARD of the source and UUT. This will help prevent ground signals from being capactivety coupled to the LO at the higher frequencies.

*Note*

*Early versions of the 5790A (prior to S/N 6780031) may have a different guard connection procedure than detailed in this manual. To prevent inaccurate measurements, follow the guard connection instructions in this manual.*

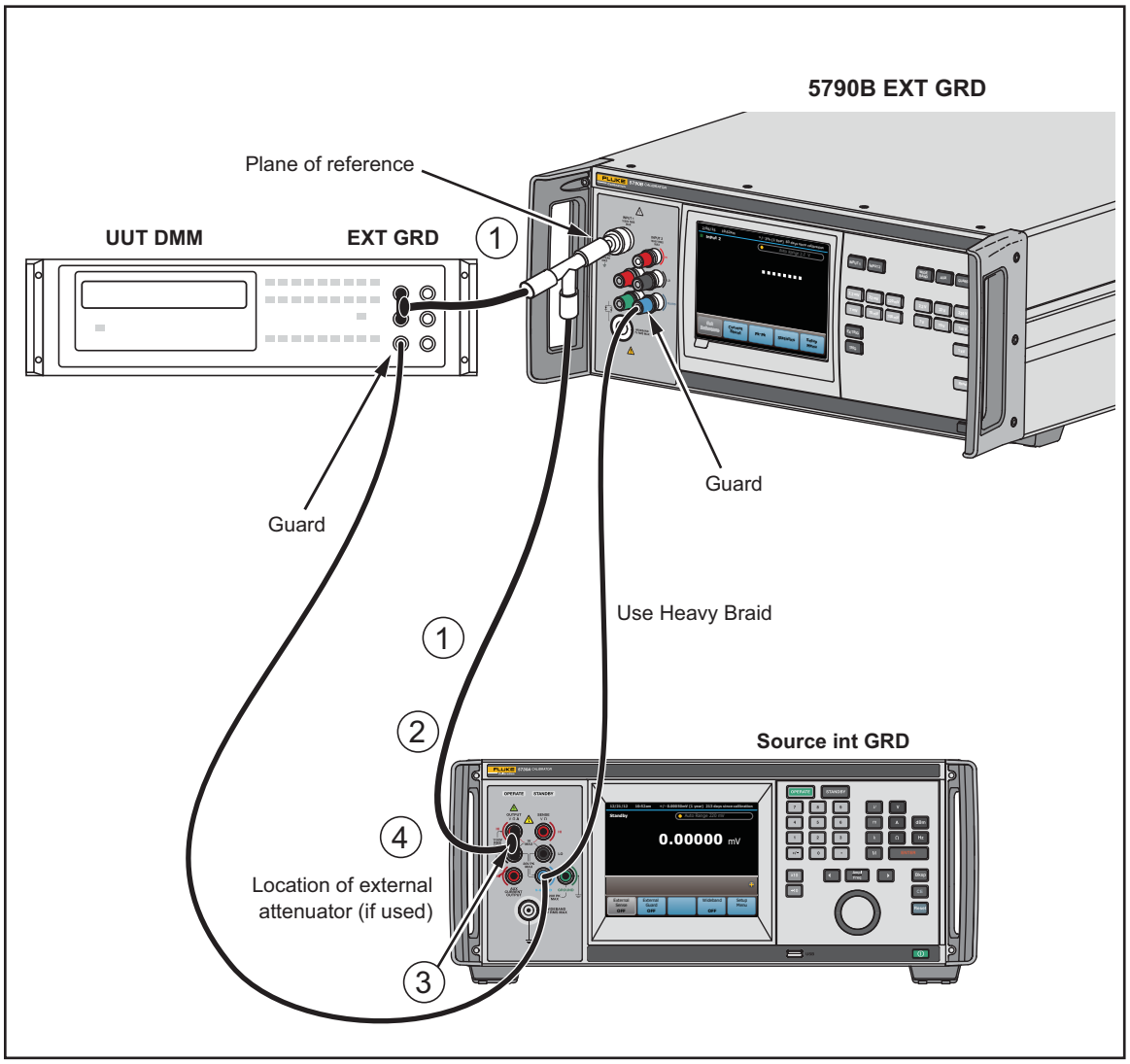


hvi032.eps

**Figure 4-1. Recommended Test Lead Connections to Test a Voltmeter**

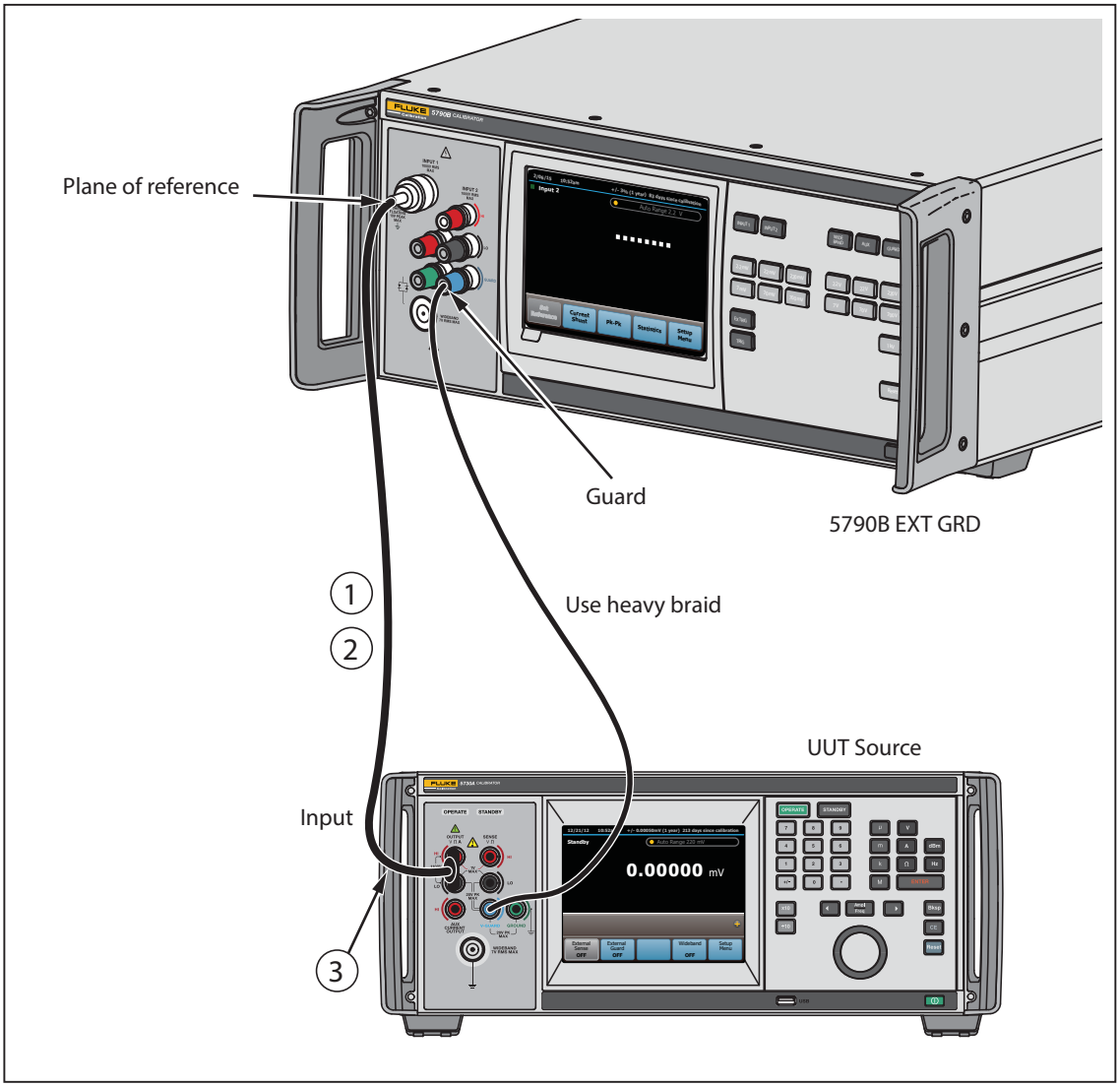


hvi031eps

**Figure 4-2. Recommended Test Lead Connections to Test a Source**

## *External Guard Connection*

For some conditions, such as low-frequency common mode interference, use the external guard configuration for better results. Push GUARD to select external guard. The **Guard** indicator on the display is lit. This disconnects the LO from GUARD and connects the internal guard to the GUARD binding post. A connection from the GUARD binding post can then be made to the common earth ground point for the system.

# Basic Operation

Whether your application involves measurement mode or transfer mode, you can select certain measurement parameters. Among them is the Digital Filter Mode and Restart threshold, accessible through the **Setup Menu>Instrument Setup** menu. This and other measurement parameters are described in this section.

## Interpreting the Display

The display shows the measured input voltage and frequency. Features and functions of the display are summarized in Table 3-1 in Chapter 3. Refer to the Specifications for resolution information for the different ranges.

The upper portion of the display shows the magnitude of the applied signal in volts (V) or millivolts (mV). The lower portion of the display shows the frequency of the applied signal in Hz, kHz, or MHz. When the input frequency is <9 Hz, the frequency portion of the display is blank. When the Product has not taken a measurement since power up, or an action such as an input or range change has invalidated a measurement in progress, the display shows dashes instead of numerals as in the figure below.

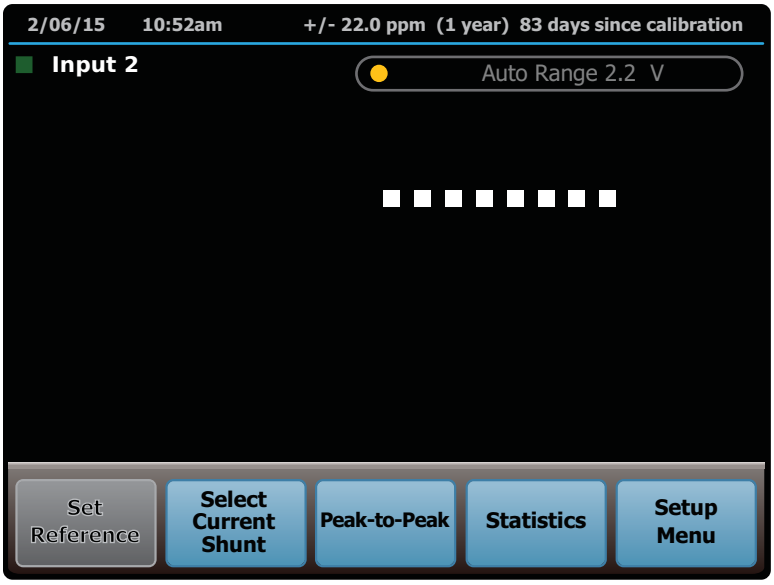


hvi008.eps

Text can also be shown for the measurement value to indicate the following:

- **Over Range** on the display indicates an overload.
- **Under Range** on the display indicates an under-range input.

*Note*

*If dashes are shown for the current measurement, the true resistance of the shunt is unknown. Refer to the A40 and A40A current shunt in formation in* Instructions for Current Measurements.

Measurements should not be considered valid while there are dashes (--) in the measurement value, as shown below. These dashes indicate that the measurement is unsettled.

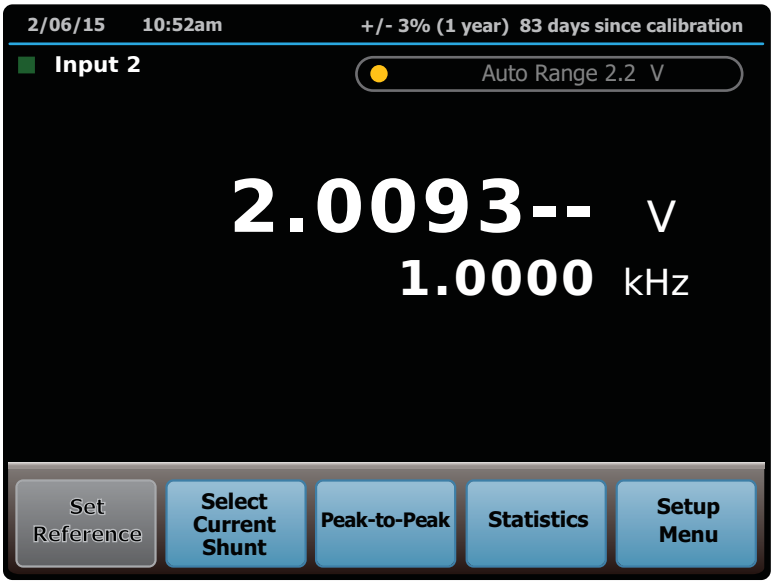


hvi001.eps

## Digital Filter Mode

Located in the **Setup Menu>Instrument Setup**, the digital filter is used to obtain optimum results in measurement environments with various levels of noise. When enabled, a software digital filter makes the measurement shown become an average of the 4, 16, or 32 most recent measurements. These numbers correspond to the FAST, MEDIUM, and SLOW rates that you select with the **Digital Filter Setup Mode** function. The **Filter Fill Count** indicator at the top of the display increments until the window is full, although full resolution is shown with the first settled reading.

The digital filter affects the value shown on the display as well as the value used for references and delta computations when the Product is in transfer mode.

*Note*

*When you select a Digital Filter Mode of SLOW or MEDIUM, the display shows an extra digit of resolution in some main input and WIDEBAND input ranges. See Table 4-5 for details.*

The digital filter restart floor is user-configurable and is found in the **Setup Menu>Instrument Setup**. Use the restart floor to set the threshold for restarting the filter (as a way of rejecting inconsistent readings). Readings over the threshold flush the filter and start a new running average. Until the filter completely fills without being restarted, the **Filter Fill Count** indicator at the top of the display increments until the window is full. The restart settings are COARSE, MEDIUM, and FINE, corresponding to 1000, 100, and 10 counts, respectively. For sources that are unstable or noisy, you may have to use the COARSE restart threshold in order to get settled readings.

*Note*

*The extra digit of resolution obtained in the SLOW and MEDIUM Digital Filter Mode settings does not apply to the number of counts selected by the* **Restart** *softkey.*

For example, suppose the instrument is in the 22V range and the digital filter settings are Mode = SLOW and Restart = FINE. The display now shows the window average of the most recent 32 readings with an extra digit of resolution. If after 20 readings the running average is 10.000032 and the 21st reading is 10.000042, the reading does not restart the filter because the extra digit of resolution does not apply to the 10-count threshold. If, however, the 21st reading is 10.000132, it would trigger the 10-count threshold and restart the filter. The **Filter Fill Count** indicator at the top of the display increments until the window is full as shown below:

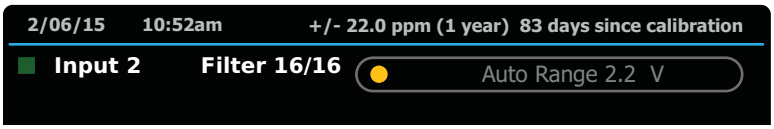


hvi036.eps

*Note*

*If you change the input voltage slightly with the filter active, you will not get correct readings until the filter has been completely flushed. With the RESTART threshold set to coarse and a small input change, the digital filter may not restart. Push* TRIG *to manually restart the filter.*

## *Hi Res Mode*

The "Hi Res" mode increases the Measurement Display resolution by one digit in several of the ranges. The same is true for setting the Digital Filter to SLOW or MEDIUM (see *Digital Filter*).

Table 4-5 shows the resolution for each range, depending on the “Hi Res” and Digital Filter settings.

**Table 4-5. Measurement Display Amplitude Resolution**

| Input Range | Input 1 and 2 | | Wideband Input | |
|---|---|---|---|---|
| | **Hi Res OFF *and* Digital Filter OFF/FAST** | **Hi Res ON *or* Digital Filter SLOW/MEDIUM** | **Hi Res OFF *and* Digital Filter OFF/FAST** | **Hi Res ON *or* Digital Filter SLOW/MEDIUM** |
| 1000V | 1000.000 | 1000.0000 | N/A | N/A |
| 700V | 700.000 | 700.0000 | N/A | N/A |
| 220V | 220.0000 | 220.00000 | N/A | N/A |
| 70V | 70.0000 | 70.00000 | N/A | N/A |
| 22V | 22.00000 | 22.000000 | N/A | N/A |
| 7V | 7.00000 | 7.000000 | 7.0000 | 7.00000 |
| 2.2V | 2.200000 | 2.2000000 | 2.20000 | 2.200000 |
| 700 mV | 700.000 | 700.0000 | 700.00 | 700.000 |
| 220 mV | 220.0000 | Same | 220.000 | 220.0000 |
| 70 mV | 70.0000 | Same | 70.000 | 70.0000 |
| 22 mV | 20.0000 | Same | 20.0000 | Same |
| 7 mV | 7.0000 | Same | 7.0000 | Same |
| 2.2 mV | 2.2000 | Same | 2.2000 | Same |

## Statistics

Located on the Main Menu, use the Statistics feature to sample the input signal being measured and to calculate standard deviation of the signal in ppm and V for various sample sizes. To access the statistics menu, push the **Statistics** softkey. The Statistics menu is shown below.

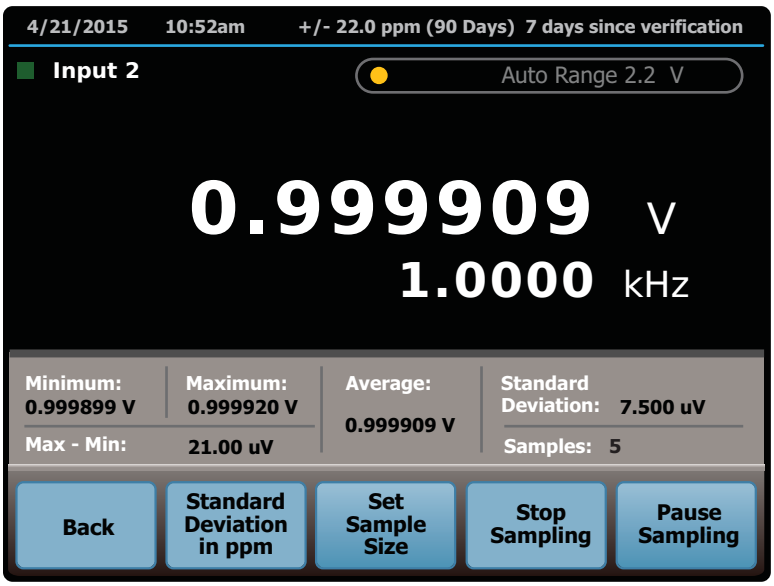


hvi033.eps

Push the **Statistics** softkey to sample the input signal. Sampling automatically starts. The Product accumulates samples from the input signal and shows standard deviation and sample size on the measurement screen. Push the **Stop Sampling** softkey to stop accumulating samples. Push the **Pause Sampling** softkey to momentarily pause sampling, and then the **Start Sampling** softkey to resume. Push the **Clear Samples** softkey to clear accumulated samples. The Product starts to accumulate new samples.

Standard deviation of the samples can be shown in ppm of reading or in V. The ppm standard deviation feature shows the standard deviation normalized to the average value of the input signal. The V standard deviation shows the absolute standard deviation measured in volts. Push either the **Standard Deviation in ppm** and **Standard Deviation in V** softkeys to toggle between both display modes.

Sample size is an important consideration because a smaller sample size results in more uncertainty in the standard deviation calculation. It is useful to set up the Product to accumulate a specified number of samples. Push the **Set Sample Size** softkey to choose a sample size between 1 and 999. If no sample size is chosen or if sample size is set to 0, the Product accumulates samples indefinitely. After a sample size is chosen, the Product starts to accumulate samples up to the specified amount of samples and then stops.

Push the **Back** softkey to exit the statistics mode and return to normal measurement mode.

## Current Shunt Function

Located in the Main Menu, the Product can be used with a current shunt to determine the current-sourcing ability of a UUT by measuring the voltage output of a current shunt as shown below. Refer to *Instructions for Current Measurements* for information and instructions on how to use this function.

hvi034.eps

Clearing the shunt returns the Product to normal operation.

## Peak-to-Peak Function

In addition to the standard rms measurement, peak-to-peak voltage measurements can also be shown. Push the **Peak-to-Peak** function on the measurement screen to access the peak-to-peak measurement feature. Select Sine, Square, Triangle, or Truncated sine waves to view the calculation on the screen.

## Selecting Auto or Locked Range

When set to Auto Range, the Product ranges up or down and usually selects the best range in which to measure a voltage. For measurements near top or bottom of range, however, you may need to lock the range to keep the Product in the desired range. When voltages >2.2 V are measured, lock the desired range before applying the voltage for best performance. Auto Range is selected at power-up and after a RESET.

To lock the Product range, touch the indicated range field at the top of the display and note that the label changes to "LOCKED." You can also lock a range by simply pushing one of the range select keys. All further measurements are taken in the locked range until the range is reset to AUTO. Locking a range and applying excessive voltage for that range does not damage the Product if the voltage and current limits are within specification (1000 V dc or rms, and 200 mA max). To place the Product back into Auto Range, touch the indicated range field at the top of the display.

The Product input impedance is dependent on the range selected. For low voltage ranges, 2.2 V and below, the Product has a high input impedance minimizing errors associated with sources with higher impedances (such as the 5730A millivolt ranges which are 50 Ω). For higher voltage ranges, input impedances as low as 50 kΩ are obtained. A temporary introduction of a 50 kΩ load (which will occur during the Product auto-range) may affect a source instrument. If the output voltage of a source instrument is affected more than 10 %, resulting from the Product auto-ranging, the Product will follow the source voltage fluctuations. Because of the continual voltage fluctuations between the range changes, a condition may arise where the instruments are not able to settle to a stable state.

The 5205A and 5215A instruments provide an internal slew rate trip mechanism that is affected by load fluctuations that occur during voltage transitions. The 5205A and 5215A instruments expect their loads to be stable during voltage transitions. If the load voltage is not stable, a slew rate trip condition may occur. If the slew rate monitor is triggered, the 5205A and 5215A will momentarily source a low voltage and will try to apply the desired voltage again. As a result, a cyclic pattern occurs and the Product auto-ranging tracks the source instrument and appears to oscillate between ranges. Range lock the Product to the desired range and then apply the voltage from either the 5205A or 5215A. This prevents a cyclic auto-range condition between the 5790B and the 5205A or 5215A instruments. When a 5205A is used as the boost amplifier for the 5700A, a slew rate trip condition is avoided because the 5700A forces a controlled ramp to the final voltage. Auto-ranging will then work as expected on the Product. Even so, it is best to range lock the Product for best performance.

### Selecting Continuous or External (Single) Trigger

When the Product is in continuous trigger mode, the Product is continuously taking measurements. This is the initial setting at each power-up. As soon as one measurement is completed, the Product begins a new measurement at the active input. Select continuous trigger mode by pushing EX TRIG so that the **Ext Trigger** indicator on the display is off.

In the external trigger mode, the Product only takes a measurement when you push TRIG. When TRIG is pushed, the Product begins a new measurement, even if a partially completed measurement is under way. Select external trigger mode by pushing EX TRIG so that the **Ext Trigger** indicator on the display is on.

When the Digital Filter is active and the Product is in external trigger mode, push TRIG to start a series of measurements. When the filter is full, the Product stops sampling the input until TRIG is pushed again, or EX TRIG is pushed to change to continuous trigger mode.

## Instructions for Voltage Measurements

The Product features two modes for maximum versatility:

- Measurement Mode

  The Measurement Mode provides a direct absolute measurement.

- Transfer Mode

  The transfer mode significantly increases the specifications of the measurement by performing an ac/dc transfer.

Read subsequent sections for more information on each mode.

### Measurement Mode

In measurement mode, the Product is a precise digital multimeter (DMM) and measures a voltage applied to the selected input. Depending on trigger mode, the Product takes single readings when you push TRIG or it takes continuous readings. See *Basic Operation* for other operating parameters that you can set and for information about overrange and underrange readings.

Two examples of measurement mode applications are determining the error of an ac source and determining the error of an ac voltmeter. No external calibrators or standards are required during measurement mode operations unless you are calibrating a voltmeter. When taking a measurement, the display shows as follows (assuming HI RES is ON or Digital Filter is MEDIUM or SLOW):

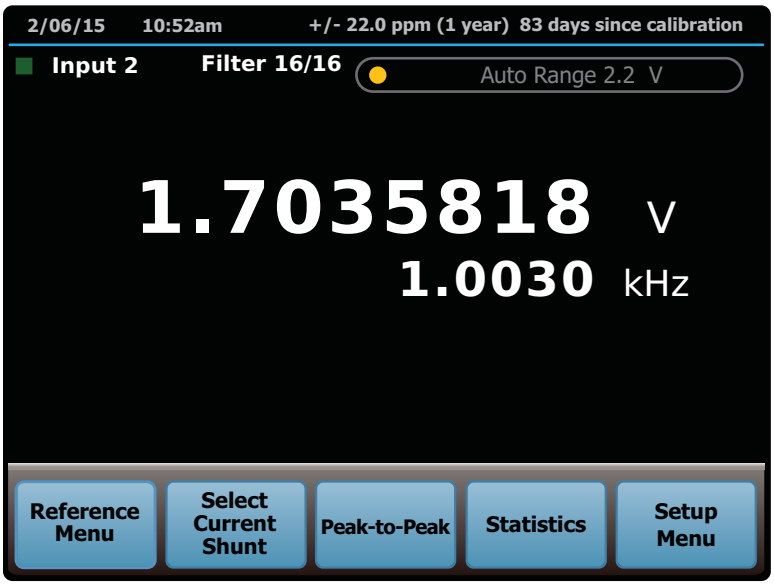


hvi004.eps

To determine the error of an ac source, check the specifications for proper test uncertainty ratios and measure the source. To determine the error of an ac voltmeter using measurement mode, apply an ac source to the Product input and the ac voltmeter input in parallel. See Figure 4-1 for test lead connection guidelines.

## Transfer Mode

In Transfer Mode, the Product can make ac measurements with improved specifications by comparing it against a known dc value of the same magnitude. See *AC/DC Transfer Mode* in the Specifications for a comparison of Transfer Mode uncertainties to Absolute uncertainties obtained in the Measurement Mode.

To make a transfer, a positive and negative dc voltage of the same magnitude must be set and averaged (see *Establish a Reference).* The Transfer Mode is enabled by pushing the **Set Reference** softkey which stores the reading and opens the reference menu. After a reference is set, subsequent readings are compared against the averaged reference and shown after the selected formula is applied.

### Transfer mode example

To check a calibrator's ac output at 2 V, at multiple frequencies and for the lowest uncertainty:

1. Select INPUT 2 and apply a precise +2 V dc voltage to INPUT 2.
2. Select the **Set Reference** softkey. The Product establishes the + 2 V dc input as a reference against subsequent readings.

To eliminate dc reversal errors, average the reference against its equal and opposite value:

1. Apply -2 V dc to INPUT 2.
2. Select the **Average Reference** softkey. The Product now uses the average of the absolute values of the +2 V and - 2 V readings as the reference. This eliminates any dc offsets.

To make ac measurements, select INPUT 1 and apply 2 V ac (at 1 kHz for example) from the calibrator to INPUT 1. The Product shows the difference between the 2 V, 1 kHz and the averaged dc reference as shown below. 2 V outputs at other frequencies can be checked in a similar manner.

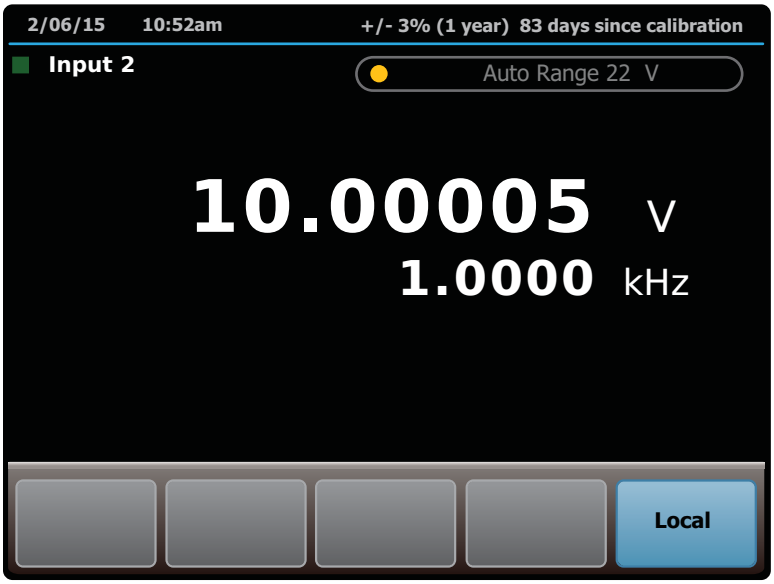


hvi010.eps

The Transfer Mode can also be used to compare a known ac value to another ac value, for example when checking the ac response (“flatness”) of an instrument. For example, to compare the flatness of an ac calibrator at 1 V relative to its 1 kHz output.

1. Select INPUT 1 and apply 1 V, 1 kHz to INPUT 1.
2. Select the **Set Reference** key. The Product takes that reading as the Reference.

*Note*

*An average of the Reference is not necessary when making ac/ac transfers.*

3. Apply 1 V, 10 kHz to INPUT 1, and the Product shows the difference between the present input of 1 V, 10 kHz and the reference (1 V, 1 kHz).

One example of a Transfer mode application is determining the error of an ac source referenced to an external dc standard such as a Fluke 5730A Calibrator. In transfer mode, an external source can be used to establish a reference, and the uncertainty of the measurement is governed by Product ac-dc difference specifications in addition to the uncertainty of the dc source.

Before putting these procedures into practice, see *Techniques for Reducing Transfer Error*. Observing the hints provided there will help ensure accurate transfers. See Figures 4-1 and 4-2 for test lead connection guidelines. (In these figures, a multifunction calibrator is used as the ac and dc reference.)

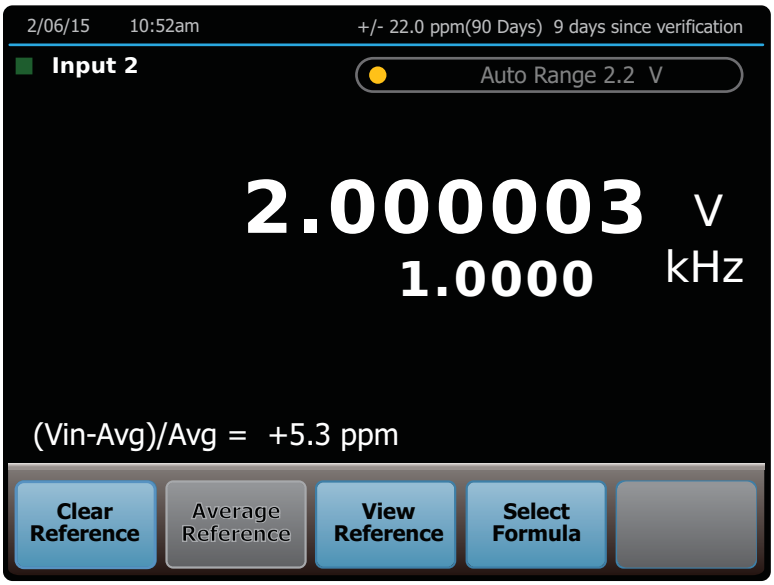


hvi038.eps

### Establish a Reference

To establish a reference, apply an external dc reference to INPUT 1 or INPUT 2. For highest resolution and most stable measurement, set the Digital Filter to SLOW. (**Setup Menu>Instrument Setup**.) Under **Digital Filter Setup** select **Mode>Slow (32)**. Adjust the digital filter speed and/or restart threshold if the settled reading (Filter Fill indicator above the measured reading) is too long.

To set a reference:

1. Connect an accurate dc voltage source to INPUT 1 or INPUT 2 and select the input from the front panel.
2. Apply a positive dc voltage and wait for the measurement to stabilize. Make sure the magnitude of the dc voltage is the same as the ac voltage to be measured.
3. Select the **Set Reference** softkey on the main menu. This will store the positive dc voltage for the reference.
4. Apply a negative dc voltage by reversing the polarity of the input. Make sure the negative value is the same as the positive dc voltage applied in step 2.
5. Select the **Average Reference** softkey on the menu. This stores the negative dc measurement and completes the reference process. Now AC voltage measurements can be made. The error is shown on the screen, and at any time the reference calculation can be viewed on the screen by selecting the **View Reference** softkey. The delta units can be changed as described in the subsequent sections.
6. Repeat this sequence for subsequent measurements.

### View Reference Softkey

If a reference is set, push **Reference Menu>View Reference** (if you are not already in the Reference Menu) to show the measured value of the active reference.

If you previously pushed the **Average Reference** softkey, you will see both input values that were used to compute the averaged reference.

Push **Hide Reference** or **Back** to return to normal operation.

### Choose Delta Units

During transfers, the display shows the difference between an applied input and the stored reference or average of references. The difference can be shown in units of V (or mV), ppm, percent, or ratio. Once a reference has been established, push **Reference Menu>Select Formula** to cycle through the choices. From the Select Formula menu, you can select which formula you would like for the difference calculation. After choosing which calculation to use, the display shows the difference calculation at the bottom of the screen.

# Instructions for Current Measurements

The Product makes accurate absolute and relative current measurements when used in conjunction with a current shunt. Fluke offers three current shunts that can be used with the Product: the A40B, A40A, and A40. The Fluke A40B makes direct, absolute current measurements and offers optimal performance and convenience. Use one of the following shunt and input combinations to measure current with the Product:

- Fluke A40B Current Shunt connected to INPUT 1 or INPUT 2 to make absolute or relative measurements. See *Current Measurements with the Fluke A40B*.
- Fluke A40 or A40A connected to INPUT 1 or the AUX input to make relative ac measurements. See *Current Measurements with the A40/A40A*.
- Custom current shunt connected to INPUT 1 or INPUT 2, to make absolute or relative measurements, depending upon the characteristics of the shunt.

*Notes*

*The Fluke A40B is specified for absolute dc resistance and offers direct measurement of current from dc to 100 kHz with comparable accuracy than the previously available shunt technology used in the Fluke A40 and A40A. The A40B has outstanding resistance value stability, an excellent self-heating power coefficient, and a low-temperature coefficient. Fluke Calibration recommends Fluke A40B Current Shunts for direct, absolute current measurements.*

*To make current measurements with the Fluke A40/A40A or Custom current shunts, special Fluke adapters are required. See* Current Measurements with the A40/A40A or Custom Shunts *for more information.*

See the subsequent sections for more instructions on how to connect and make measurements with each current shunt.

## Current Measurements with the Fluke A40B

### Overview

The A40B current shunts (1 mA to 100 A) give optimal performance when making direct absolute ac or dc current measurements or ac/dc current transfer measurements.

The A40B shunts connect directly to the inputs without the need for an adapter. This reduces the potential for errors and is a method for making direct, absolute current measurements.

## *Connect an A40B*

Use the Fluke A40B Current Shunts only with INPUT 1 via an N-type coaxial cable or INPUT 2 via standard terminal plugs.

Fluke Calibration offers two cables with different terminations to accommodate the various application needs.

- The A40B-LEAD/N (PN 3275938) is an N-type coaxial cable that connects the shunt output voltage connector to INPUT 1.
- The A40B-LEAD/4MM (PN 3275923) is a standard dual terminal plug that connects the shunt output voltage connector to INPUT 2. For more information on the connection types and frequently asked shunt questions, see *A40B Precision Current Shunts, Answers to Frequently Asked Questions* located on www.flukecal.com.

**⚠Warning**

**To prevent measurement errors that could lead to personal injury or equipment damage, do not use the AUX input with A40B current shunts or custom shunts. Measurement errors will be present due to the built-in 90 Ω AUX input resistor.**

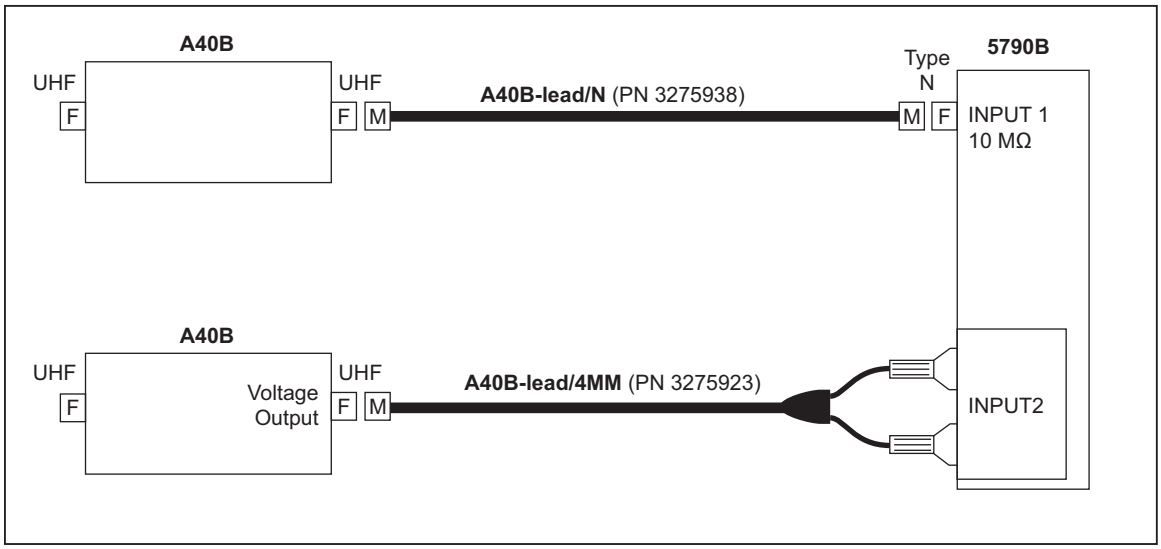


**Figure 4-3. Measuring Absolute Current Using A40B**

### *Set Up a Fluke A40B Shunt*

The Product is optimized of the use of A40B shunts.

To set up an A40B shunt:

1. Select **Setup Menu >Instrument Setup >Current Shunt Details**.
2. Select the range of the A40B shunt.
3. For a new shunt, select **Add New** to load the shunt Information. For an existing shunt, select the serial number from the list.
4. From the A40B calibration certificate, add the serial number, calibration date, DC error, and AC/DC Diff Error.

*Notes*

*The DC Error on the calibration certificate is based on the deviation from the nominal resistance which the A40Bs gives a 0.8 V output for the nominal full-scale current.*

*The Loading Error at various frequencies is based on empirical studies and is listed in the A40B Instruction Manual. These loading errors are pre-programed as defaults for each shunt range.*

5. Select **Done** to save the A40B shunt to memory.

### *Measure with a Fluke A40B Shunt*

To make a current measurement with the Fluke A40B:

1. Set up the A40B shunt as instructed in *Setting Up a Fluke A40B Shunt*.
2. Connect the shunt to the INPUT 1 Type "N" connector or INPUT 2 binding posts. Refer to *Connecting to an A40B*.
3. Select INPUT 1 or INPUT 2 from the front panel.
4. On the main menu, choose **Select Current Shunt** to open the menu to select the shunt. Shunts are organized by their range and serial number.
5. Select the desired shunt. Once selected, the shunt information is shown on the display next to the current measurement. At any time, select **Shunt Details** to view the A40B shunt information.
6. Set and average a dc reference to use transfer mode if necessary. See *Instructions for Transfer Mode*.

*Note*

*For A40B shunts, it is not necessary to use the transfer mode function. However, the transfer mode provides improved specifications for ac measurements as listed in the AC/DC Transfer Mode column in the specification tables.*

7. Apply the ac current under test. Results are shown and continuously updated on the display.

## *Current Measurements with an A40, A40A, or Custom Current Shunt*

### *Overview*

The Fluke A40/A40A allows for relative ac/dc current transfer measurements from 2.5 mA to 20 A with a frequency range of 10 Hz to 100 kHz. All connections are made to INPUT 1 or the AUX Input using the special Fluke adapters noted in the subsequent sections.

### *Connect an A40/A40A or Custom Shunt to INPUT 1*

Use accessory 792A-7004 to connect the Fluke A40/A40A Current Shunts to INPUT 1 and make current measurements, see Figure 4-4. The 792A-7004 has an internal 90 Ω resistor for direct connection to the A40/A40A current shunts for relative current measurements.

*Note*

*The A40/A40A can only provide relative current measurements relative to a reference input (either dc or ac). For direct absolute current measurements, use a Fluke A40B.*

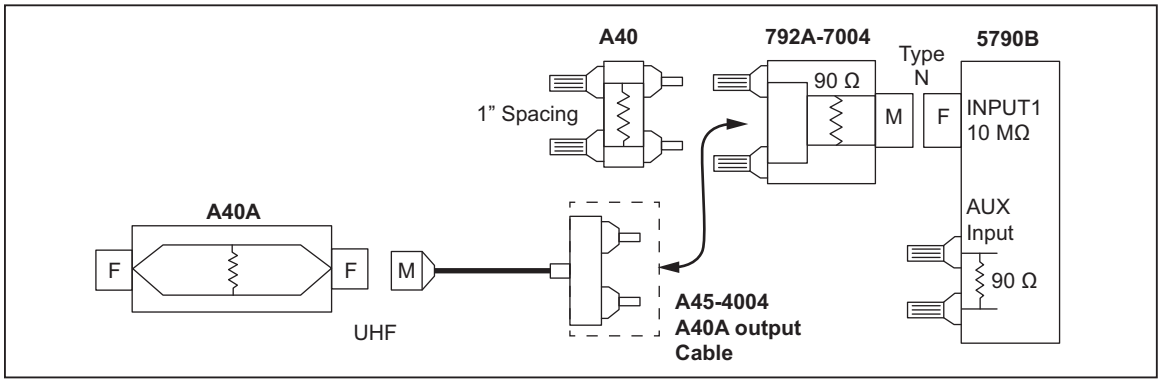


hvi012.eps

**Figure 4-4. Measuring Relative Current Using 792A-7004**

If the uncertainty of the A40 or A40A shunt and the Product are insufficient for your application, obtain better uncertainties by calibrating the A40/A40A Current Shunt (with the 792A-7004 adapter) for ac/dc current difference together with the Product as a system. This system calibration (where the Product/Shunt/Adapter are calibrated as a system) can be done at our Fluke Electrical Laboratory. The Fluke Laboratory does this system calibration at specific currents and frequencies up to 30 kHz with uncertainties as low as 25 ppm. Since the 792A-7004 Adapter is shunting part of the current, it must be sent in and characterized with the A40 or A40A Current Shunts and the Product.

To use the INPUT 1 and the 792A-7004 the adapter, see Figure 4-4:

1. Connect the 792A-7004 adapter to the INPUT 1 Type "N" connector.
2. Connect a Model A40 (not A40A) Current Shunt to the adapter.
3. Push **INPUT1** so that “INPUT 1” is shown in the upper corner of the display.

## *Connect an A40/A40A to the AUX Input*

**⚠Warning**

**To prevent measurement errors that could lead to personal injury or equipment damage, do not use the AUX input with custom shunts. Measurement errors result from the 90 Ω built-in AUX input resistor.**

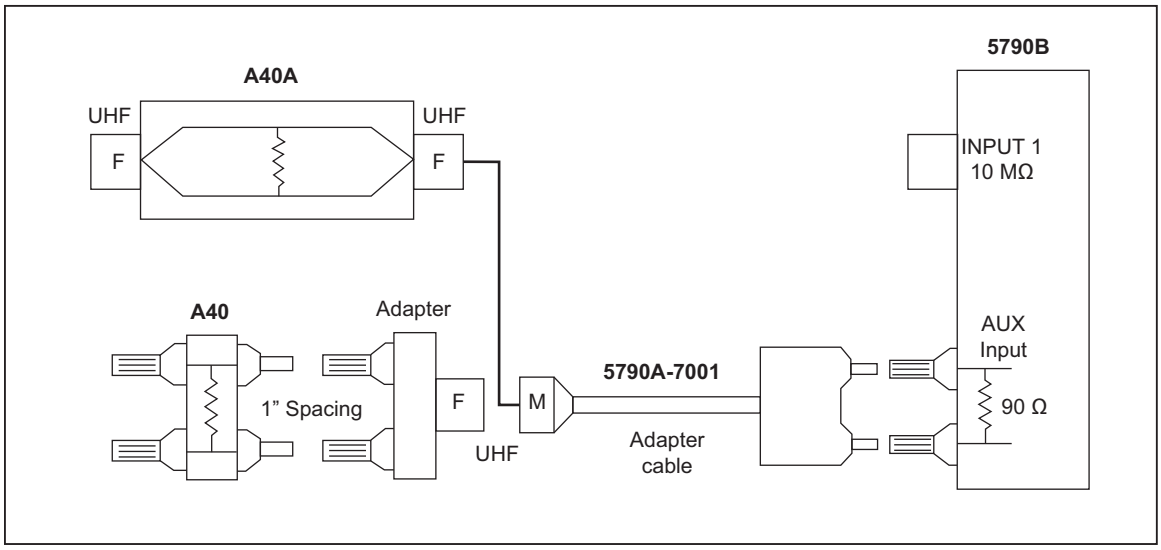


**Figure 4-5. Measuring Relative Current Using 5790A-7001**

Use the 5790B-7001 accessory to connect the Fluke A40 or A40A Current Shunts to the Product AUX input to make current transfers up to 20 A (see Figure 4-4). The Product AUX Input is internally terminated with a 90 Ω resistor that allows for direct connection to current shunts. Connection to A40 and A40A Current Shunts requires the 5790A-7001 accessory which consists of an adapter and cable. The cable is approximately 36 inches long and has a male terminal plug on one end and a UHF (M) connector on the other. This cable connects between the Product AUX Input and the A40A Current Shunt or the adapter (see Figure 4-3). The adapter has a UHF (F) connector on one end and one-inch spaced female banana jacks on the other. This one-inch spacing allows for connection to the A40 Current Shunt.

When the Product AUX Input is used, where the 90 Ω termination resistor is internal to the Product, calibrate the Product as a system with the A40 or A40A Current Shunts. Fluke Calibration recommends that the Product and the 792A-7004 adapter be used on INPUT 1 (and not the AUX input) for ac/dc current calibration when better uncertainties are necessary.

To use the AUX input:

1. Connect the 5790A-7001 adapter cable to the AUX and INPUT 2 LO binding posts.
2. Connect the 5790A-7001 adapter to the 5790A-7001 adapter cable.
3. Connect a A40 Current Shunt to the 5790A-7001 adapter.
4. Connect a A40A Current Shunt to the 5790A-7001 adapter using an A45-4004 cable.
5. Push **AUX** so that “Aux” is shown in the upper corner of the display.

### *Set up a Fluke A40/A40A or Custom Current Shunt*

To set up an A40/A40A or Custom current shunt:

1. Select **Setup Menu >Instrument Setup >Current Shunt Details**.
2. Navigate to page 2 of the menu and select **A40/A40A/Custom Shunt**.
3. To load new shunt Information, select **Add New**. For an existing shunt, select the serial number from the list.
4. Add the serial number, calibration date, True Resistance, and AC/DC Diff Error located on the calibration certificate.

*Note*

*For accurate absolute current measurement, the Product must know the true resistance value of the current shunt. Any time the true resistance value of the shunt is unknown, "0" must be entered into the **True Resistance** field. If the true resistance value is unknown, to prevent misinterpretation of the current measurement on the main menu, the True Resistance field will be greyed out and **------** replaces the current measurement on the main menu. The voltage measurement are still shown allowing it to be extracted and used for external calculations. The A40 and A40A calibration certificates do not list the true resistance value and when used, the current measurement will be "unknown" and only the voltage measurement is shown on the main menu. For Custom shunts, if the true resistance value is known, enter it into the field in setup to allow for direct, absolute current measurements and for the current measurement to be present.*

*Note*

*The Loading Error at various frequencies is based on empirical studies and is listed in the A40B Instruction Manual. These loading errors are pre-programed as defaults for each shunt range.*

5. Select **Done** to save the A40, A40A, or Custom shunt to memory.

### *Measure with a Fluke A40, A40A or Custom Shunt*

To make a current measurement with the Fluke A40, A40A, or Custom shunt:

1. Setup the A40, A40A, or Custom shunt as instructed in *Load and Edit a Fluke A40/A40A or Custom Current Shunt*.
2. Connect the shunt to the INPUT 1 or AUX input using the special Fluke adapters previously prescribed. Refer to *Connect an A40/A40A or Custom Shunt to the AUX Input*.
3. Select **INPUT 1** or **AUX** from the front panel.
4. On the Main Menu, choose **Select Current Shunt**. A40, A40A, and Custom shunts are organized by their serial number.
5. Select the desired shunt. Once selected, the shunt information is now shown on the main screen next to the current measurement. At any time, select **Shunt Details** to view the shunt information.
6. If desired, set and average a dc reference to use transfer mode. See *Instructions for Transfer Mode*.
7. Apply the ac current under test. Transfer results are shown and continuously updated on the display.

## *Instructions for Wideband Measurements*

The Option 5790B/3 (30 MHz) or 5790B/5 or 5790B/AF (50 MHz) Wideband AC Voltage modules allow the Product to measure the frequency flatness of a 50 Ω source signal generator such as the 5730A Wideband output. The 5790B Wideband option measures signals from 600 µV to 7 V over a frequency range of 10 Hz to 30 MHz (Option 5790B/3) or 50 MHz (Option 5790B/5 and 5790B/AF). The input impedance is 50 Ω on all ranges.

To measure frequency flatness of a source using the WIDEBAND input (requires a Wideband Option):

1. Connect the 50 Ω source to the WIDEBAND input.
2. Push WIDE BAND and set the range as desired.
3. Set the source to a voltage under 7 V, 1 kHz.
4. Push the **Set Reference** softkey to store a reference.

*Note*

*The /AF option includes a high-quality, rugged, 0.91 meter (3 foot) Type "N" cable assembly and a 50 MHz, 0 dBm spot calibration to measure the 50 MHz reference output of RF power meters. The cable is marked with the same serial number as the product. The spot calibration is done with the cable attached and the specifications only apply when that cable is attached. Push the* **50 MHz Cable Correction** *softkey to enable the cable corrections. The specifications are only applicable for the 700 mV range at amplitudes of 223.607 mV (0 dBm nominal) ±5 % and from 48 MHz to 52 MHz. For measuring the accuracy of a 50 MHz reference output of an RF power meter, turn on the power reference output on the UUT and monitor the measurement on the Product.*

5. For normal wideband operation, vary the source from 10 Hz to 30 MHz (Option 5790B/3) or 50 MHz (Option 5790B/5) while recording the amplitude error relative to the stored 1 kHz reference. The error can be shown in ppm, percent, voltage, or ratio as the input frequency is swept through its range.

*Note*

*You can use the same technique to check frequency flatness with the main input.*

6. In addition to RF voltage, the wideband menu has an RF Power function that toggles the on-screen measurement between equivalent power in watts (W) and decibel-milliwatts (dBm).

## Techniques for Reducing Transfer Errors

In making ac-dc transfers for the purpose of determining absolute ac voltage, errors can come from dc reversal, loading (both cable induced and instrument input), thermal emfs, changes in mechanical contact, spurious ground currents in the signal leads, and EMI.

Knowing more about these errors can help reduce the amount of time you spend experimenting and debugging to get the best possible results. Once you are confident that error sources are minimized, a good practice is to take three measurements. That way, if one measurement is faulty, it stands out.

### DC Reversal

In measurement mode, the Product cancels potential dc reversal errors by chopping its internal dc reference into a low-frequency square wave. In transfer mode, it is up to you to correct for dc reversal to meet specifications. Apply one polarity of dc to the transfer standard input and push the **Set Reference** softkey, then reverse the input polarity and push the **Average Reference** softkey. In this way you establish a reference that consists of the average of both polarities of the dc input.

### Loading

The Product input impedance may affect ac voltage source output levels. See Table 4-4 for the input impedance on each range. Sources with resistive dividers on the output are especially sensitive to loading errors. Cables present an additional capacitive load to the source.

Check the specifications and instruction manual for each type of ac voltage source before connecting the source to the Product. Avoid exceeding the drive capability of the ac voltage source, no matter what the transfer application is. When in doubt, use an oscilloscope or spectrum analyzer to make sure the ac source is not loaded to the point that it is producing a distorted signal.

Before you calibrate an ac voltage source, there is another source of loading error to consider. What will the ac voltage source be used for after calibration? Many meters have highly capacitive inputs and present a much heavier load than the transfer standard. One way to compensate for meter loading is to simulate a meter load during calibration with the Product. To simulate a meter load, connect a load equivalent in capacitance and resistance of the meter input across the Product input.

### Mechanical Contact

Connection contact resistance variation is a potential error source on the ranges above 2.2 V. By using high quality cables and connectors, you can minimize this source of error. Use stainless steel coaxial connectors if possible. They are machined with more precise threads, which make better electrical contact. The Type "N" connectors on the Product are all stainless steel.

To achieve the highest quality measurements, do not disturb the instrumentation setup during the course of a transfer. Try not to move, jostle, or vibrate the Product, the source, or any of the input signal wiring from the time you apply the first input voltage until you take the last reading of the transfer.

*Note*

*Most importantly, always repeat the measurements until you are satisfied that the results are repeatable relative to the specification being measured.*

### Thermal EMFs

Avoid thermal emf errors in the cabling between a dc voltage source and the INPUT 2 binding posts. Thermal emfs introduce bias into the dc voltage as seen by the Product. To reduce thermal emf errors, use low thermal emf cables and connectors and avoid touching any connection during a transfer. All it takes to change the emf error and adversely affect a transfer is to briefly touch a connector or binding post. It typically takes five minutes to thermally stabilize a connection after it has been touched.

### EMI

The Product inputs, especially the WIDEBAND input, are broadband inputs. This means you should avoid applying RF signals that can be inadvertently picked up by cables.

To minimize cable pickup, use short coaxial leads when possible, especially at test voltages below 2 V. Shielded cables and connectors can minimize the contribution of EMI to transfer uncertainty. A common-mode choke at the input terminals is an effective EMI suppressor when using low-level inputs. Do not use a common-mode choke for the ranges above 2.2 V.

Soldering irons, fluorescent lights, anything with a motor, and all similar things can radiate EMI. Turn off soldering irons, and keep the Product away from fluorescent lights and other noise sources.

# Chapter 5
# Remote Operation

## Introduction

The Product operates in local mode from the front panel controls or under remote control of an instrument controller, computer, or terminal. Remote control can be interactive, with the user controlling each step from a terminal, or under the control of a computer program running the Product in an automated system. This chapter tells you how to connect, configure, and operate the Product in remote mode. Chapter 6 is a command reference that describes all alphabetized commands in detail.

The remote programmer uses a language of commands called “device-dependent commands” to duplicate the functions of the front panel controls. The Product has four remote interfaces: IEEE-488, RS-232 Serial, 10/100/1000-baseT Ethernet, and USB 2.0. Only use one interface at a time. The interface is selected in the Remote Setup menu as described below.

*Note*

*You can use 5790A remote programs to operate the 5790B.*

**⚠⚠Warning**

**To avoid electrical shock, program the Product with caution. The Product can measure voltages up to 1100 V rms. Programs should be written carefully and tested extensively to ensure safe operation. Fluke Calibration recommends that you include error-catching routines in your programs to ensure that the Product performs as intended. Set the Service Request Enable register (SRE), described in Chapter 6, to program the product to cause an SRQ when an error is detected.**

## Using the IEEE-488 Interface for Remote Control

The Product is fully programmable for use on the IEEE Standard 488.1 interface bus (IEEE-488 bus). The interface is also in compliance with supplemental standard IEEE-488.2. Devices connected to the bus in a system are designated as talkers, listeners, talker/listeners, or controllers. Under the remote control of an instrument controller, the Product operates exclusively as a talker/listener on the IEEE-488 bus.

This manual assumes you know the basics of the IEEE-488 interface bus.

## IEEE-488 Bus Restrictions

These restrictions apply to all IEEE-488 systems:

- A single IEEE-488 bus system can have a maximum of 15 devices connected.
- The maximum length of IEEE-488 cable used in one IEEE-488 system is either 2 m (6.56 ft) times the number of devices in the system, or 20 m (65.61 ft), whichever is less.

## IEEE-488 Bus Setup Procedure

To set up the Product on the IEEE-488 bus, choose the address and connect to a controller. To set up the bus:

1. With the Product off, attach the IEEE-488 cable to the rear panel IEEE-488 connector. Fluke Calibration recommends shielded cables Y8021 (1m), Y8022 (2m), or Y8023 (4m) from Fluke.
2. Push ⏻ to turn on the Product.
3. Touch **Setup Menu>System Settings>Remote Por**t.
4. The IEEE-488 bus address for the Product is shown in the GPIB Setup region. To change the address, touch the editable field and enter a new address with the numerical keys.
5. If the Active Remote Port is not GPIB, touch **Active Remote Port** and then touch **GPIB**.
6. Touch **Exit** to exit the Remote Port Menu.

## IEEE-488 Interface Configuration

The Product IEEE-488 interface supports the IEEE-488 interface function subsets listed in Table 5-1.

**Table 5-1. Supported IEEE-488 Interface Function Subsets**

| Interface Function | Description |
|---|---|
| SH1 | Complete source handshake capability |
| AH1 | Complete acceptor handshake capability |
| T6 | Basic talker; serial poll; no talk-only mode; unaddressed if MLA |
| TEO | No extended talker capabilities |
| L4 | Basic listener operation; no listen-only mode; unaddress if MTA |
| LEO | No extended listener capabilities |
| SR1 | Full service request capability with ability to bit-mask SRQ |
| RL1 | Full remoter/local capability including local lockout |
| PPO | No parallel poll capability |
| DC1 | Device clear capability |
| DT1 | Device trigger capability |
| C0 | No bus control capability |

## Bus Communication Overview

Communication between the controller and the Product takes place with commands established by IEEE-488 standards and commands specifically related to the Product. The commands in Table 6-6 are all the remote commands, both common and device-dependent.

Definitions of the different types of messages used on the IEEE-488 bus:

- Device-dependent commands are messages that transfer information directly between the Product and the IEEE-488 controller. Some commands cause an action to take place in the Product. Others, called queries in the IEEE standards, ask for information, and always generate a response message from the Product. While message format is governed by IEEE-488 standards, messages themselves can be unique to the Product. For example, use device-dependent commands to set the input binding post or calibration type.
- Common commands defined by IEEE standards are used for functions common to most bus devices. Examples include the command to reset a device (*RST) and the query for device identification (*IDN?). Common commands and queries can be identified easily because they all begin with an asterisk (*).

- Interface messages defined by IEEE standards have their own control lines, and others are sent over the data lines by first asserting the control line ATN (Attention). An important thing to note about interface messages is that unlike device-dependent and common commands, interface messages are not sent literally (in a direct way). For example, when a device-dependent query is sent to the Product, the controller automatically sends the interface message MTA (My Talk Address).

# RS-232 Serial Interface

Use this section to control the Product from a terminal or computer with a serial interface. This section describes how to set up the RS-232 interface for remote control with protocol similar to IEEE-488. This section provides all details on data transmission.

The RS-232 interface is designed in accordance with EIA (Electronic Industries Association) standard RS-232.

## RS-232 Interface Specifications

The RS-232 interface is configured as DTE (Data Terminal Equipment). You must use a null-modem cable with two female 9-pin subminiature D connectors to connect the Product to other DTE (Data Terminal Equipment) such as a typical computer serial interface. The recommended shielded cable is a Fluke RS43.

Table 5-2 shows the choices available and the defaults for all programmable interface parameters for the Product.

**Table 5-2. RS-232 Interface Parameter Choices**

| Parameter | Function | Choices | Default Setting |
|---|---|---|---|
| Data Bits | Set number of data bits | 7 or 8 | 8 |
| Stop Bits | Set number of stop bits | 1 or 2 | 1 |
| Flow Control/Stall | | Ctrl S/Ctrl Q, (XON/XOFF), RTS, or none | Ctrl S/Ctrl Q |
| Parity Checking | Select parity mode | Odd, even, or none | None |
| Baud Rate | Set baud rate | 9600, 19200, 38400, 57600, or 115200 | 9600 |
| EOL (End of Line) | Set end of line parameter | CR,LF, or CR LF | CR LF |
| EOF (End of File) | Set end of line character | Any two ASCII characters | No characters |

## Set Up and Connect the Serial Interface

Refer to the specifications for the peripheral device, and proceed as follows to set up the serial interface for the application:

1. With the Product power off, connect a shielded 9-pin D subminiature RS-232 null-modem cable such as Fluke accessory RS43 to the rear panel RS-232 connector and to the peripheral device. Always use a completely shielded cable.
2. Push ⏻ to turn on the Product.
3. Touch **Setup Menu>System Settings>Remote Port>RS-232 Setup**. The display changes to:

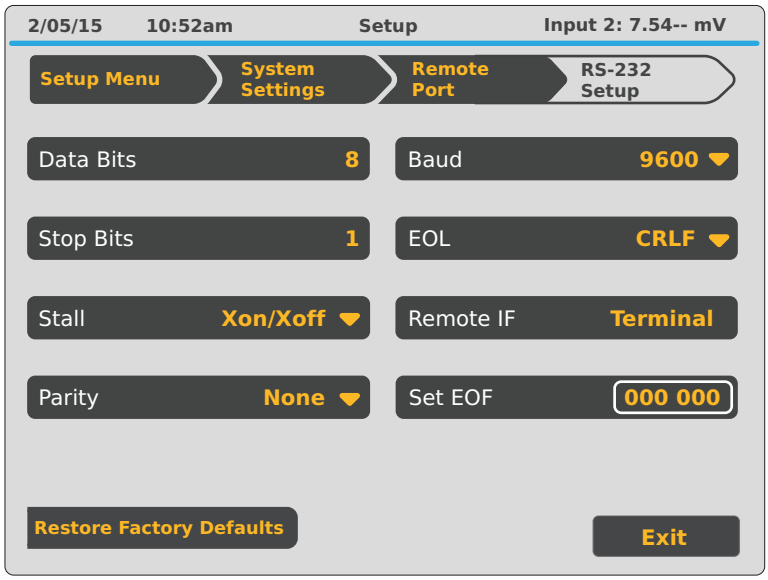


hvi022.eps

4. Touch the parameter you want to change. See Table 5-2**.**
5. Touch **EOL** to set the EOL (End Of Line) character to CR, LF, or the string CR LF.
6. To set up the interface for remote control of the Product, touch **Remote IF** and make a selection (**Terminal** or **Computer)**.
   - **Terminal** sets the remote port to expect a human operator to be using a terminal attached to the RS-232 port to control the Product. This setting has the same effect as specifying TERM in the SP_SET or REM_MODE remote command parameter string.
   - **Computer** sets the remote port to expect a computer to be controlling the Product over the RS-232 port. This setting has the same effect as specifying “COMP” in the SP_SET or REM_MODE remote command parameter string.
7. To designate a character or character string as the EOF (End Of File) character, touch **Set EOF**.
   a. Enter the decimal code of the ASCII character(s) designated as EOF. (Appendix A contains a table of ASCII codes.)
   b. Verify that the selection is correct as shown on the display.
8. To exit the setup menus, touch **Exit**.

### *Serial Remote Control Setup Procedure*

1. Turn on the Product.
2. Touch **Setup Menu>System Settings>Remote Port**.
3. If the Active Remote Port is not RS-232, touch **Active Remote Port>RS-232**.
4. Touch **Exit** to exit the Remote Port Menu.

### *Exceptions for Serial Remote Control*

When you use the RS-232-C port to remotely control the Product, either interactively with a terminal or under computer control, operation is the same as when you use an IEEE-488 controller connected to the IEEE-488 port for control, with the following exceptions:

- Control/C does the same function as DCL (Device Clear) or SDC (Selected Device Clear).
- The EOL (End of Line) input terminator is Carriage Return (Control/M) or Line Feed (Control/J). All output lines are terminated by the character selected in a setup menu, or set using the remote commands SP_SET or EOL. This setting applies to all lines, including those with the *PUD command (see *PUD (Protected User Data) and RPTSTR).
- Control/R echoes to the port a Carriage Return, a Line Feed, and any uncompleted remote command entered. This allows you to see a copy of whatever has been typed in since the last command.

- *PUD (Protected User Data) and RPTSTR commands store characters for later recall. The serial remote interface does not store the characters listed below. These characters are processed as described above, so they cannot be a part of the *PUD command, except if "C\" notation is used within strings. The *PUD command terminates with Carriage Return (Control/M) or Line Feed (Control/J), the same as all other serial remote commands:
    - ^C (Control/C)
    - ^J (Line Feed)
    - ^M (Carriage Return)
    - ^R
    - ^S (XOFF)
    - ^Q (XON)
    - ^B (Backup)
    - ^P (Serial Poll)
    - ^D (Cmd List)
    - ESC
- The status registers still behave as described in this section, but there is no SRQ (Service Request) bus line to assert. For the equivalent of SRQ, refer to the remote commands SRQSTR and SRQSTR?
- There are seven special commands available only for serial remote control: REMOTE, LOCKOUT, LOCAL, SPLSTR, SPLSTR?, SRQSTR, and SRQSTR?. These are described with the other commands in Chapter 6.

## Ethernet Interface

The subsequent sections describe how to use an Ethernet interface with the Product.

### Set Up and Connect the Ethernet Interface

Refer to the specifications for the LAN network, and use this section to set up the Ethernet interface for the application:

To get to the Ethernet Setup menu, touch **Setup Menu>System Settings>Remote Port>Ethernet Setup**.

*Note*

*Connect to the LAN network before you make any changes to the Ethernet configuration.*

Computers will often interpret zeros in the IP address as OCTAL values. As an example, if the IP address is configured from the front panel as 129.196.017.023 and then a connection to the 5790B is attempted, a connection will be made to the IP address 129.196.17.23. Attempts to establish a connection to 129.196.017.023 from a computer or other device may result in a connection request to 129.196.15.19.

### Set the IP Address

An internet (IP) address is necessary for all internet and TCP/IP communications. If DHCP is enabled, the Product uses the dynamic address supplied by the DHCP server. If the DHCP server fails to supply the address, the Product IP address shows as "0.0.0.0".

### Select the Dynamic Host Configuration Protocol (DHCP)

Dynamic Host Configuration Protocol (DHCP) is a client-server protocol that eliminates the manual set up of permanent/static IP addresses. The DHCP server provides configuration parameters (dynamic IP address, subnet mask, and default gateway IP addresses) that are necessary for a client to participate in an IP network.

DHCP is the easiest way to configure the 5790B for remote communication through the LAN interface. DHCP is enabled by default when the 5790B is shipped from the factory. When you connect the Product to a network with the LAN port enabled, the Product retrieves the parameters from a DHCP server necessary for communications.

To disable or enable DHCP on the Product, from the Ethernet Setup menu, touch **DHCP**. If DHCP is already enabled, the selection label shows ON.

To use DHCP addressing:

1. Connect a LAN cable from a hub to the LAN port on the back of the Product.
2. Touch **Setup Menu>System Settings>Remote Port>Ethernet Setup** to get to the Ethernet Setup menu.
3. Select **DHCP ON**.

   Use the Ethernet Setup menu to check the dynamic IP address assigned to the Product.

### Set a Static Internet Address

The Product comes from the factory with 169.254.001.001 in the static IP address register.

*Note*

*To use the Product on a corporate LAN without DHCP, contact the network administrator for a static IP address to be used exclusively by the Product. Disable DHCP to set a static IP address.*

To change the Product static IP Address:

1. Do steps 1 and 2 from *Select the Dynamic Host Configuration Protocol (DHCP) and select DHCP OFF*.
2. Touch **IP Address**.
3. Use the numeric keypad to enter the IP address and then push **Done**.

If you make a mistake when the IP address is entered, **Cancel** must be pushed.

*Note*

*The IP address is stored in non-volatile memory, and does not change when power is removed and reapplied to the Product or when the Product receives a *RST command.*

### Configure the General Network Socket Port

To communicate with each other, a client computer and the Product must use the same socket port number. The default port is 3490. Typically, the default port does not need to be changed. If the socket port must be changed, enter the Socket Port number supplied by the network administrator.

To change the Socket Port number:

1. Touch **Setup Menu>System Settings>Remote Port>Ethernet Setup** to get to the Ethernet Setup menu.
2. Touch **PORT**.
3. Use the numeric keypad to enter a new port number.
4. Push **Done**. The port number must be between 1024 and 65535.

If you make a mistake when the socket port is entered, push **Cancel** and go to step 3 to enter the port number again.

*Note*

*The Network Socket Port Number is stored in non-volatile memory.*

### Configure the LAN Default Gateway

The default gateway IP address is the IP address of a gateway (router) attached to the same network as the device. When the Product detects that a client computer is not on the same network (using the network number), the data is sent through the gateway to reach the host computer.

The default for the Product is “0” (no gateway, and subnetting is not being used).

To set the LAN Default Gateway address:

1. Do steps 1 and 2 from *Select the Dynamic Host Configuration Protocol (DHCP)*.
2. Touch **Gateway**.
3. Use the numeric keypad to enter the gateway address and then push **Done**.

If you make a mistake when the gateway address is entered, push **Cancel** and go to step 3 and enter the address again.

### Set the LAN Subnet Mask

If communication between the client computer and the Product passes through a router or gateway, and DHCP is disabled, it is necessary to set the subnet mask and default gateway address on both the client computer and the Product. Get the correct subnet mask and gateway address from the network administrator.

The LAN Subnet Mask is a 32-bit number. This number is represented as four 3-digit segment numbers on the front-panel display. The default subnet mask set at the factory is 255.255.254.0.

To change the Product subnet mask:

1. Do steps 1 and 2 from *Select the Dynamic Host Configuration Protocol (DHCP)*.
2. Touch **Subnet Mask**.
3. Use the numeric keypad to enter the subnet mask and then push **Done**.

If you make a mistake when the subnet mask is entered, push **Cancel** and go to step 4 to enter the address again.

### Read the MAC Address

The MAC Address is set at the factory and cannot be changed. The MAC address can be read from the Ethernet Setup menu. The MAC address can also be accessed with a remote connection that uses the MACADDR? remote command.

### Establish an Ethernet Connection

Telnet is the easiest method of establishing an Ethernet connection with the Product, and Telnet is a client-server protocol, based on TCP. The Telnet Protocol provides a fairly general, bi-directional, eight-bit byte oriented communications method. Telnet is available on all UNIX servers and on most PCs.

Telnet clients typically connect to hosts on socket port 23. The LAN connection to the Product must be established with the specified Network Socket Port. See *Configure the General Network Socket Port*. When the remote interface port is changed to LAN from the Product front panel, a LAN server is initiated in the Product that listens for client connections on the socket port at the specified IP address.

To establish a LAN connection to the Product from a computer with either UNIX, LINUX, or MS-DOS command prompts:

1. Touch **Setup Menu>System Settings>Remote Port>Ethernet Setup** to get to the Ethernet Setup menu.
2. Touch **Setup Menu>System Settings>Remote Port** and change **Active Remote Port** to **Ethernet** if necessary. At the command prompt on the client computer, enter:

   telnet <IP Address> <Socket Port>

   As an example, if the IP address is known to be 129.196.136.131 and the Socket Port is set to 3490, at a command prompt from any client computer, enter:

   telnet 129.196.136.131 3490

Once the internal LAN server connects with the client computer, the LAN server rejects any other connection attempts by other computers/clients and will “tunnel” a channel to the connected computer. This prevents multiple computers from trying to control the Product.

*Note*

*While connected to the Product using the Ethernet remote port, it is not possible to change the Ethernet port settings. First terminate the connection and then make Ethernet configuration changes.*

### Terminate an Ethernet Connection

To terminate the Ethernet connection, you must terminate the Telnet session on the client computer. Switching remote control ports will also terminate the Telnet session.

It may be necessary to terminate the Telnet session on the client computer but maintain the current LAN remote interface port selection. Client Telnet session termination can vary from computer to computer. Typically, terminating the shell (or command window in DOS) will terminate the Telnet session. When the client terminates the Telnet session, the LAN server in the 5790B goes back into listen mode waiting for a new client to make a LAN connection request.

### Use of Ethernet Remote Control

Use the Ethernet port to remotely control the Product, either interactively with a terminal or under computer control. Operation is the same as with an RS-232 controller connected to the RS-232 port for control.

## USB 2.0 Remote Control

1. Touch **Setup Menu>System Settings>Remote Port**.
2. If the Active Remote Port is not USB, touch **Active Remote Port**.
3. Touch **USB**.
4. Touch **Exit** to exit the Remote Port Menu.

Use the USB port to remotely control the Product, either interactively with a terminal or under computer control. Operation is the same as with an RS-232 controller connected to the RS-232 port for control.

To configure the Product for USB:

1. Connect to the Product with a virtual communication port on the computer and a terminal program such as PuTTY, HyperTerminal, or Minicom on a linux PC.
2. Make sure to close the terminal program on the computer when the USB remote control cable is disconnected. This properly terminates the virtual communication port session in the computer.
3. Connect the USB remote control cable and open the virtual communication port on the computer from within the terminal program.

# Chapter 6
# Remote Commands

## Introduction

The following syntax rules apply to all the remote commands. A command consists of a word (by itself or a word followed by one or more parameters). The rules for parameter syntax are provided first, including proper usage of units and multipliers, followed by the rules for extra spaces, followed by the rules for terminator usage. A description of how the Product processes incoming characters provides the basis for answering other possible questions about syntax. Information about syntax of response messages is also given.

### Parameter Syntax Rules

Many of the remote commands require parameters, which must be used properly to prevent command errors. When a command error occurs, bit CME (5) in the Event Status Register (ESR) goes to 1 (if enabled in ESE register), and the error is logged in the error queue. Table 6-1 lists the vocabulary of units accepted in command parameters and used in responses.

General rules for parameter usage are:

- When a command has more than one parameter, the parameters must be separated by commas. For example: "CLOCK 133700,071712".
- Numeric parameters can have up to 15 significant digits and their exponents can be in the range ±1.0E ±20.
- Including too many or too few parameters causes a command error.
- Null parameters cause a command error (for example, the adjacent commas in "CLOCK 133700, , 071712").
- Do not use expressions as parameters, for example "(4+2*13)".

**Table 6-1. Units Accepted in Parameters and Used in Responses**

| Units | Meaning |
|---|---|
| Hz | Hertz |
| kHz | Kilohertz |
| MHz | Megahertz |
| uV | Microvolts |
| mV | Millivolts |
| V | Volts |
| KV | Kilovolts |
| A | Amps |
| dBm | Decibels |
| PCT | Percent |
| ppm | Parts-per-million |
| RATIO | (Unitless) |

## Extra Space or Tab Characters

The remote program examples are at the end of this chapter. Commands and their parameters are shown separated by spaces. One space after a command is required. All other spaces are optional. Spaces are inserted for clarity in the manual and may be left in or omitted as desired. Extra spaces within a parameter are generally not allowed, except for between a number and its associated multiplier or unit.

The Alphabetical List of IEEE-488.2 Common Commands and Alphabetical List of Device Dependent Commands in this chapter, contain examples for commands whose parameters or responses are not self-explanatory.

## Terminators

To signify the end of a response sent to the controller, the Product sends a "terminator." The Product sends the ASCII character Line Feed with the EOI control line held high (IEEE 488) as the terminator for response messages. The Product recognizes the following as terminators when encountered in incoming data:

ASCII LF character

Any ASCII character sent with the EOI control line asserted (IEEE 488)

### Incoming Character Processing

The Product processes all incoming data (except Binary Block Data as described under the *PUD commands.):

- The most significant data bit (DIO8) is ignored.
- All data is taken as 7-bit ASCII.
- Lower-case or upper-case characters are accepted.
- ASCII characters whose decimal equivalent is less than 32 (Space) are discarded, except for characters 10 (LF) and 13 (CR) and in the *PUD command argument. *PUD allows all characters in its argument and terminates in a special way.

### Response Message Syntax

The command descriptions in this chapter, describe responses from the Product wherever appropriate. In order to know whether to read in an integer, a floating-point number, or character string, the first entry is (Integer), (Floating), or (String). The response is identified as one of the data types in Table 6-2.

*Note*

*The responses described in the command descriptions are correct for IEEE-488 remote control, and for serial/Ethernet/USB remote control in COMPUTER mode. TERMINAL mode responses (in serial/Ethernet/USB remote control) contain more descriptive text intended for an operator using a terminal interactively.*

## Input Buffer Operation

As the Product receives each data byte from the controller, it places the bytes in a portion of memory called the input buffer. The input buffer holds up to 128 data bytes and operates in a first in, first out fashion.

The Product treats the EOI IEEE-488 control line as a separate data byte and inserts it into the input buffer if it is encountered as part of a message terminator.

Input buffer operation is transparent to the program running on the controller. If the controller sends commands faster than the Product can process them, the input buffer fills to capacity. When the input buffer is full, the Product holds off the IEEE-488 bus with the NRFD (Not Ready For Data) handshake line. When the Product has processed a data byte from the full input buffer, it then completes the handshake, allowing the controller to send another data byte.

The Product clears the input buffer on power-up and on receiving the DCL (Device Clear) or SDC (Selected Device Clear) messages from the controller.

Under RS-232-C serial port remote control using Control/S (XOFF) protocol, the Product issues a Control/S (XOFF) when the input buffer becomes 80% full. The Product issues a Control/Q (XON) when it has read enough of the input buffer so that it is less than 40% full. When RTS (Request to Send) protocol is used, the serial interface retracts and asserts RTS in response to same conditions as for XON/XOFF protocol.

**Table 6-2. Response Data Types**

| Data Type | Description |
|---|---|
| Integer | Integers for some controllers or computers are decimal numbers in the range from -32768 to 32767.<br>Responses in this range are labeled Integer.<br>Example:<br>CMD: *ESE 123; *ESE?<br>RESP: 123 |
| Floating | Numbers that may have up to 15 significant figures plus an exponent that may range from +/-E20.<br>Example:<br>CMD: CAL_CONST? FREQ_G<br>RESP: +1.000141377406621E+00 |
| String | Any ASCII characters included within quotation marks<br>Example:<br>CMD: RPTSTR "Hello World"; RPTSTR?<br>RESP: "Hello World" |
| Character Response Data (CRD) | This type of response is always a keyword such as PPM, PCT, and RATIO.<br>Example:<br>CMD: DUNIT PPM;DUNIT?<br>RESP: PPM |
| Indefinite ASCII (IAD) | Any ASCII characters followed by EOM. (EOM is an IEEE-488 bus message.) Queries with this type of response MUST be the last query in a program message.<br>Example:<br>CMD: *OPT?<br>RESP: WBND<br>CMD: *OPT?;*ESE?<br>RESP: <none><br>ERR? = 1310,"488.2 Query After Indefinite Response"<br>CMDSTR? = "*opt?;*ese?\n"<br>CAL reports and lists which contains NEWLINE's<br>are typically of this type |
| Binary Block Data | A special data type defined by the IEEE-488.2 standard. This type is used in *PUD? query. It is defined as follows:<br>#(non-zero digit) (digits) (user data)<br>The non-zero digit specifies the number of characters that will follow in the <digits> field. Characters allowed in the digits field are 0 through 9 (ASCII 48 through 57 decimal). The value of the number in the <digits> field in decimal defines the number of user data bytes that follow in the <user data> field. The maximum response is 64 characters.<br>Example:<br>CMD: *PUD "test1"; *PUD?<br>RESP: #40005test? |

# Using Commands

Communication between the controller and the Product consists of interface messages and commands. Interface messages are defined by the IEEE-488.1 standard and control the lowest level of bus communication. Interface messages are handled automatically by the controller. (See "Interface Messages" further on in this chapter for more information.) The commands are described in this chapter. Command types are:

- Common commands: Commands that start with an asterisk. These are defined by the IEEE-488.2 standard.
- Device-dependent commands: Commands specific to the Product.
- Queries: Commands that cause the Product to send a response to the controller. These commands always end with a question mark (?).

Table 6-6 summarizes the commands by function. The command descriptions provide protocol details of the remote commands.

The commands duplicate almost all activities that can be initiated from the front panel in local operation. Separate headings for each command in the tables provide the parameters and responses (if any), and an example for cases in which the parameters are not self-explanatory.

## Multiple Commands

Controllers may send commands all at once, or one at a time. For example, if you want take a reading on INPUT 2, you can send these two commands:

```
INPUT INPUT2 <CR/LF>
MEAS? <CR/LF>
```

You can combine the two commands as a compound command in one statement as follows:

```
INPUT INPUT2;MEAS? <CR/LF>
```

## Sequential and Overlapped Commands

Commands executed immediately as they are encountered in the data stream are called sequential commands. Commands that begin execution, but are completed later are called overlapped commands, because they can be overlapped by later commands. All the commands described in this chapter are sequential unless it is stated otherwise in the alphabetical listings.

You can use *OPC, *OPC?, and *WAI to detect completion of overlapped or long-term commands. (See the full descriptions of *OPC, *OPC?, and *WAI in this chapter for more information about these commands.)

## Calibration Security Passcode

The integrity of the Product calibration is protected by a security passcode that must be entered before new calibration constants can be saved to non-volatile memory. This passcode replaces the hardware calibration switches found on the Fluke 5790A. The calibration can be run without the passcode, but the coefficients cannot be saved until the product is unsecured.

*Note*

*Calibrating the Product while in a secured state results in the new calibration constants being temporarily used until the Product is powered off or* Reset *or the reset remote command is used. This is a feature that can be used to temporarily improve the accuracy of a given range without affecting last full calibration.*

As with the 5790A, the passcode protects the ability to set the date for the internal real-time clock.

Once the passcode is entered, it is unsecured. The Product can be unsecured at any time over the remote interface with the CAL_SECURE command. The front panel prompts for the passcode to unsecure the Product before it can accept new values to be eventually secured. The Product secures itself when it is powered on or using the *RST remote command.

The passcode contains 1 to 8 decimal digits. The Product is shipped with a default passcode set to "5790". To change the passcode, touch **Setup Menu > Calibration > Change Cal Passcode**. The Product prompts for the current passcode and then the new passcode. The passcode can also be changed over the remote interface with the CAL_PASSWD command.

Like the 5790A, the 5790B also has some calibration commands that require you to set the calibration secure state to “SERVICE” cal mode. This requires a separate passcode that is only available by contacting Fluke Customer Support. You will need to know the Product serial number to acquire the SERVICE passcode. If the passcode is lost, contact Fluke Customer Support. See *How to Contact Fluke Calibration* in Chapter 1.

## Long-Term Commands

Some remote commands take a relatively long time to execute. These are called "long-term commands" and they are identified as such in the command descriptions in this chapter. If a command that produces a change in instrument state is received during the execution of a long-term command, for example, CAL_AC, the command is not executed and a device-dependent error occurs. (Bit 3 in the Event Status Register is set to 1 if enabled, and the error code for the error is available to be read from the error queue. See the "ERR?" command for more information.)

### Definition: Queries and Commands

Messages directed to the Product are commands and queries. Commands instruct the Product to do something or to set a value, and no response is expected. Queries generally ask only for information from the Product and a response is always expected. Some queries also require the Product to take action. For example, the *TST? query has the Product do a self test, then send the result to the controller. A query always ends with a question mark. A command never ends with a question mark. (In the alphabetical listing of commands in this chapter, all commands and queries are mixed together and called commands.)

All query responses are generated instantly on receipt of the query. Queries generate their output when the Product executes the query rather than when the controller attempts to read the response. The Product generates the requested message and places it in an area of memory called the output buffer. When the controller addresses the Product as a talker, the contents of the output buffer are transmitted to the controller.

Some messages have both query and command forms (for example, *PUD and *PUD?). In such cases, the command generally sets the value of a parameter and the query generally returns the most recent value of the parameter. Some messages are queries only (for example,*IDN?). Some messages are commands only (for example, *RST).

### Functional Elements of Commands

Table 6-3 lists the functional elements of commands described by the IEEE-488.2 standard that are used by the Product. This table is for those who have a copy of the standard and want to use it to pursue additional information. The standard provides full definitions and syntax diagrams for each element.

**Table 6-3. Functional Elements of Commands**

| Element | Function |
|---|---|
| PROGRAM MESSAGE | A sequence of zero or more PROGRAM MESSAGE UNIT elements separated by PROGRAM MESSAGE UNIT SEPARATOR elements. |
| PROGRAM MESSAGE UNIT | A single command, programming data, or query received by the device. |
| COMMAND MESSAGE UNIT | A single command or programming data received by the device. |
| QUERY MESSAGE UNIT | A single query sent from the controller to the device. |
| PROGRAM DATA | Any of the six program data types. |
| PROGRAM MESSAGE UNIT SEPARATOR | Separates PROGRAM MESSAGE UNIT elements from one another in a PROGRAM MESSAGE. |
| PROGRAM HEADER SEPARATOR | Separates the header from any associated PROGRAM DATA. |
| PROGRAM DATA SEPARATOR | Separates sequential PROGRAM DATA elements that are related to the same header |
| PROGRAM MESSAGE TERMINATOR | Terminates a PROGRAM MESSAGE. |
| COMMAND PROGRAM HEADER | Specifies a function or operation. Used with any associated PROGRAM DATA elements. |
| QUERY PROGRAM HEADER | Similar to a COMMAND PROGRAM HEADER except a query indicator (?) shows that a response is expected from the device. |
| CHARACTER PROGRAM DATA | A data type suitable for sending short mnemonic data, generally used where a numeric data type is not suitable. ("String" in this manual.) |
| DECIMAL NUMERIC PROGRAM DATA | A data type suitable for sending decimal integers of decimal fractions with or without exponents. |
| NON-DECIMAL NUMERIC PROGRAM DATA | A data type suitable for sending integer numeric representations in base 16, 8, or 2. |
| SUFFIX PROGRAM DATA | An optional field following DECIMAL NUMERIC PROGRAM DATA used to indicate associated multipliers and units. |
| STRING PROGRAM DATA | A data type suitable for sending 7-bit ASCII character strings where the content needs to be "hidden" (by delimiters). |
| ARBITRARY BLOCK PROGRAM DATA | A data type suitable for sending blocks of arbitrary 8-bit information. Blocks are limited in size to 1024 bytes. |
| BINARY BLOCK DATA | A special data type as used in the *PUD command. (See the definition under "Syntax Parameter Rules.") |

## *Interface Messages (IEEE-488 Only)*

Interface messages manage traffic on the bus. Device addressing and clearing, data handshaking, and commands to place status bytes on the bus are all directed by interface messages. Some of the interface messages occur as state transitions of dedicated control lines. The rest of the interface messages are sent over the data lines with the ATN signal true. All device-dependent and common commands are sent over the data lines with the ATN signal false.

IEEE-488 standards define interface messages. Table 6-4 lists the interface messages that the Product accepts. Table 6-5 lists the interface messages that the Product sends. The mnemonics listed in the tables are not sent as literal statements as commands are. In this way they are different from device-dependent and common commands.

Interface messages are handled automatically in most cases. For example, handshake messages DAV, DAC, and RFD automatically occur under the direction of an instrument interface itself as each byte is sent over the bus.

**Table 6-4. Interface Messages Accepted by the Product**

| Mnemonic | Name | Function |
|---|---|---|
| ATN | Attention | A control line used to notify all instruments on the bus that the next data bytes are an interface message. If ATN is low, these data bytes are interpreted as device-dependent or common commands, addressed to a specific instrument. |
| DAC | Data Accepted | Set the handshake signal line NDAC low. |
| DAV | Data Valid | Asserts the handshake signal line DAV. |
| DCL | Device Clear | Clears the input/output buffers. |
| END | End | A message that is shown when the controller asserts the EOI signal line before sending a byte. |
| GTL | Go To Local | Transfers control of the Product from one of the remote states to one of the local states. |
| LLO | Local Lockout | Transfers remote/local control of the Product. |
| IFC | Interface Clear | A control line that sets the interface to a quiescent state. |
| MLA | My Listen Address | Addresses a specified device on the bus as a listener. The controller sends MLA automatically whenever it directs a device-dependent or common command to a specified instrument. |
| MTA | My Talk Address | Addresses a specific device on the bus as a talker. The controller sends MTA automatically when it directs a device-dependent or common command to a specific instrument. |
| REN | Remote Enable | Transfers remote/local control of the Product. |
| RFD | Ready For Data | Set the handshake signal line NRFD low. |
| SDC | Selected Device Clear | Identical to DCL, but only operates when the Product is addressed as a listener. |
| SPD | Serial Poll Disable | Cancels a Serial Poll Enable. |
| SPE | Serial Poll Enable | Causes the Product to return a Status Byte to the next command that addresses it as a listener, no matter what the command is. |
| UNL | Unlisten | “Unaddresses” a specific device on the bus as a listener. The controller sends UNL automatically after the device has successfully received a device-dependent or common command. |
| UNT | Untalk | “Unaddresses” a specific device on the bus as a talker. The controller sends UNT automatically after it receives the response from a device-dependent or common query. |

**Table 6-5. Interface Messages Sent by the Product**

| Mnemonic | Name | Function |
|---|---|---|
| END | End | A message that appears when the Product asserts the EOI control line, which happens when the Product transmits the ASCII character LF for its termination sequence or terminator. |
| DAC | Data Accepted | Sets the handshake signal line NDAC low. |
| DAV | Data Valid | Asserts the handshake signal line DAV. |
| RFD | Ready For Data | Sets the handshake signal line NRFD low. |
| SRQ | Service Request | A control line that can be asserted by any device on the bus to indicate that it requires attention. For details, see “Check the Product Status.” |
| STB | Status Byte | The response sent to a serial poll (SPE) by the Product. |

## Use of *OPC?, *OPC, and *WAI

The *OPC?, *OPC, and *WAI commands are used to maintain control of the order of execution of commands that could otherwise be passed up by subsequent commands.

If a CAL_NEXT command has been sent, check to see if the calibration step has completed by sending the query *OPC?. As soon as the calibration step has completed, a 1 is shown in the output buffer. Always follow a *OPC? command with a read command. The read command causes program execution to pause until the addressed instrument responds.

The *OPC command is similar in operation to the *OPC? query, except that it sets bit 0 (OPC for “Operation Complete”) in the Event Status Register to 1 rather than sending a “1” to the output buffer. One simple use for *OPC is to include it in a program in order for it to generate an SRQ (Service Request). Then an SRQ handler written into the program can detect the operation complete condition and respond appropriately. *OPC can be used similarly to *OPC?, except the program must read the ESR to detect the completion of all operations.

The *WAI command causes the Product to wait until any prior commands have been completed before continuing on to the next command, and takes no other action. *WAI is a convenient way to halt operation until the command or commands preceding it have completed.

Commands are listed in Table 6-6.

**Table 6-6. Command Summary**

| IEEE-488.2 Common Commands | |
|---|---|
| *CLS | Clears status. Clears the ESR, the ISCR, and the error queue. Terminates a ending operation complete command (*OPC). |
| *ESE | Sets event status enable register, described in Status Information section below. |
| *ESE? | Returns the decimal equivalent of the event status enable register, described in Status Information section below. |
| *ESR? | Returns the decimal equivalent of the contents of the event status register (ESR) and clears it. |
| *IDN? | Identification query. Gives an <IAD> that identifies the Model number, instrument serial number, and firmware revision levels. |
| *LRN? | Returns <IAD>, which when sent to the Product restores it to the state in effect when the *LRN? command was executed. |
| *OPC | Generates the operation complete message in the Event Status Register when all pending device operations have been finished. |
| *OPC? | Replies with a 1 when all pending operations are complete. |
| *OPT? | Queries which hardware and software options are installed. |
| *PUD | Protected user data command. This command allows the user to store a string of bytes in a nonvolatile location in the Product. The CALIBRATION secure state must be set to off (otherwise an execution error occurs). An execution error also occurs if the argument is over 64 bytes long. |
| *PUD? | Protected user data query. |
| *RCL | Restores the Product setup from a previous setup saved by *SAV. |
| *RST | Resets the state of the instrument to the power-up state, except that continuous triggering is stopped. |
| *SAV | Saves the current Product setup into a setup save area for later use by *RCL. |
| *SRE | Sets Service Request Enable register, described in the Status Information section below. |
| *SRE? | Query Service Request Enable register, described in the Status Information section below. |
| *STB? | Reads status byte. The status byte is described in detail in the instrument status section below |
| *TRG | Executes the TRIG command |
| *TST? | Checks the nonvolatile storage area (calibration constants and instrument settings). Also see DIAG. |
| *WAI | Wait-to-Continue Command. This command prevents further remote commands from being executed until all previous remote commands have been completely executed. |

**Table 6-6. Command Summary (cont.)**

| Instrument Configuration Commands | |
|---|---|
| ADDR | Sets the GPIB address. |
| ADDR? | Returns the GPIB address. |
| BRIGHTNESS | Sets the brightness of the GUI display. |
| BRIGHTNESS? | Returns the brightness setting. |
| AMPS? | Returns the corrected current shunt equivalent given the selected shunt. |
| AMPS_DELTA? | Return the shunt-corrected difference/ratio between the measurement and the reference. |
| AMPS_PKPK? | Returns the corrected current shunt peak-to-peak equivalent given the selected shunt value. |
| AMPS_REF? | Returns the reference value against which shunt-corrected DELTAs are computed. |
| CAL_MODE? | Returns the setting of the CALIBRATION MODE state. |
| CAL_SW? | Returns the setting of the CALIBRATION security state. |
| CLOCK | Sets the real time clock/calendar |
| CLOCK? | Queries the value of the real time clock/calendar |
| COMM | Selects the remote interface |
| DATEFMT | Selects the clock/calendar date format |
| DATEFMT? | Returns the clock/calendar date format. |
| DHCP | Turns on/off DHCP. |
| DHCP? | Returns the state of the DHCP setting. |
| EMULATE | Partially emulates a 5790A over the remote interface. |
| EMULATE? | Returns the state of emulation as set by the EMULATE command. |
| ENETPORT | Sets Ethernet port. |
| ENETPORT? | Returns the Ethernet port setting. |
| EOL | Sets EOL for given port. |
| EOL? | Returns EOL for given port. |
| EOFSTR | Stores the end of file character sequence for use in cal reports. |
| EOFSTR? | Returns the end of file character sequence set for cal reports. |
| EXTGUARD | Sets external guard. |
| EXTGUARD? | Returns the setting of external guard. |
| EXTRIG | Selects single trigger mode. |
| EXTRIG? | Returns the setting of EXTRIG. |
| FIRSTIN | Stores the power-up configuration for the initial input. |
| FIRSTIN? | Returns the power-up configuration for the initial input. |

**Table 6-6. Command Summary (cont.)**

| Instrument Configuration Commands | |
|---|---|
| FORMAT | Restores calibration constants and setups to factory defaults. Use with extreme care. |
| GWADDR | Sets gateway address |
| GWADDR? | Returns the gateway address. |
| IPADDR | Sets IP address |
| IPADDR? | Returns the IP address |
| MACADDR? | Returns the MAC address. |
| REM_MODE | Sets computer/terminal mode for given port. |
| REM_MODE? | Returns the computer/terminal mode for given port. |
| RPTSTR | Sets the report string. |
| RPTSTR? | Returns the report string. |
| SH | Load or create a shunt |
| SH? | Shows the data for a current shunt. |
| SH_AC? | Returns the AC/DC difference correction points for selected shunt. |
| SH_ACADD | Adds an AC/DC difference data point. |
| SH_ACCLR | Clears all of the shunt AC/DC difference corrections. |
| SH_ACDEL | Deletes a shunt AC/DC difference correction. |
| SH_ACMOD | Sets a shunt AC/DC difference correction to a new frequency & error. |
| SH_ACSETALL | Sets all shunt AC/DC difference corrections at once. |
| SH_CLR | Disables/exits current shunt measurement window. |
| SH_DCERR | Sets DC ppm error for the selected shunt. |
| SH_DCERR? | Returns the DC ppm error for the selected shunt |
| SH_DELE | Clears shunt data for a particular serial number. |
| SH_LDGEN | Loads generic shunt data for a value of shunt. |
| SH_LIST? | Lists serial numbers available for a value of shunt. |
| SH_LISTALL? | Lists all shunt serial numbers available. |
| SH_LE? | Returns the loading error correction points for selected shunt. |
| SH_LEADD | Adds a loading error correction. |
| SH_LECLR | Clears all of the loading error corrections. |
| SH_LEDEL | Deletes a loading error correction. |
| SH_LEMOD | Sets a loading error correction to a new frequency & error. |
| SH_LESETALL | Sets all loading error corrections at once. |
| SH_LOAD | Loads the shunt data from a particular serial number. |
| SH_SAVE | Saves the shunt data. |

**Table 6-6. Command Summary (cont.)**

| Instrument Configuration Commands | |
|---|---|
| SH_SERNUM | Sets the serial number of loaded shunt. |
| SH_SERNUM? | Returns the serial number of the selected shunt. |
| SH_TYPE? | Returns the type of the selected shunt. |
| SP_SET | Programs serial port nonvolatile settings. |
| SP_SET? | Returns the serial port nonvolatile settings. |
| SUBNETMASK | Sets subnet mask |
| SUBNETMASK? | Returns the subnet mask |
| WBAF | Sets whether to correct for the AF option wideband cable. |
| WBAF? | Returns the whether instrument is correcting for the AF option wideband cable. |
| WBAFOPT | Sets the correction for the AF option wideband cable. |
| WBAFOPT? | Returns the correction for the AF option wideband cable. |
| **Measurement and Transfer Commands** | |
| DBM? | Returns 50 Ω dBm power equivalent of reading. This is valid only for wideband. |
| DELTA? | Returns the delta (transfer) value from the Product. |
| DFILT | Sets the digital filter parameters for mode and restart. |
| DFILT? | Returns the digital filter parameters for mode and restart. |
| DUNIT | Sets the delta unit value. |
| DUNIT? | Returns the delta unit value. |
| HIRES | Enables and disables higher resolution amplitude display. |
| HIRES? | Returns the setting of the HIRES command. |
| INPUT | Selects the active input terminal. |
| INPUT? | Returns the active input terminal. |
| MEAS? | Triggers (or in continuous trigger, re-triggers) a new measurement, waits for it to complete, then retrieves the value of the present input measurement (the most recently completed input measurement). This is equivalent to the following sequence of commands: TRIG; *WAI; VAL? |
| MW? | Returns the 50 Ω milliwatt power equivalent of reading. This is valid only for wideband. |
| PKPK? | Returns the peak-to-peak power equivalent for requested waveform. |
| RANGE | Selects the range that best measures the specified value. The range selected is the one within whose limits (as returned by the RANGE? command) the value falls. This command turns off autoranging if it was on. |
| RANGE? | Returns the present measurement range characteristics. |
| REF? | Returns the reference value and its associated parameters. |
| REFAVG | Sets the reference to the average of the present reference value and the present input measurement; this is valid only if the reference has already been set and averaging hasn't been done since it was set. |

**Table 6-6. Command Summary (cont.)**

| Measurement and Transfer Commands | |
|---|---|
| REFCLR | Clears the reference. |
| REFSET | Sets the reference to the value of the present input measurement. |
| STATS | Turns measurement statistics ON or OFF. |
| STATS_PAUSE | Pauses statistics collection underway. |
| STATS_RESUME | Resumes statistics collection from a pause. |
| STATS_STOP | Stops collecting statistics. |
| STATS_COUNT | Sets number of samples included in the statistics. |
| STATS? | Reports statistics. |
| STATUNIT | Sets unit for sigma in statistics. |
| STATUNIT? | Retrieves unit for sigma and span in statistics. |
| TRIG | Triggers a measurement. When the Product is in manual trigger mode, it begins a measurement when it receives the *TRG, TRIG, or MEAS? command. |
| UNCERT? | Returns the present input measurement uncertainty in ppm. |
| VAL? | Returns the value of the present input measurement (the most recently completed input measurement). |
| **Serial/USB/Ethernet Remote Mode only Commands** | |
| LOCAL | Sends to local state (IEEE-488 GTL function). |
| LOCKOUT | Sends to lockout state (IEEE-488 LLO function). |
| REMOTE | Sends to remote state. (IEEE-488 REN and GTL functions). |
| SPLSTR | Sets the Serial Mode Serial Poll response string. |
| SPLSTR? | Returns the string used for Serial/USB/Ethernet Mode Serial Poll responses. |
| SRQSTR | Sets the Serial/USB/Ethernet Mode SRQ response string. |
| SRQSTR? | Returns the string used for Serial/USB/Ethernet Mode SRQ responses. |
| **Status Commands** | |
| ISCE0 | Sets the Instrument Status One To Zero Change Enable register |
| ISCE0? | Returns the contents of the Instrument Status One To Zero Change Enable register. |
| ISCE1 | Sets the Instrument Status Zero To One Change Enable register. |
| ISCE1? | Returns the contents of the Instrument Status Zero To One Change Enable register. |
| ISCR0? | Returns the contents of the Instrument Status One To Zero Change Register. |
| ISCR1? | Returns the contents of the Instrument Status Zero To One Change Register. |
| ISR? | Returns the contents of the Instrument Status Register. |

**Table 6-6. Command Summary (cont.)**

| Status Commands | |
|---|---|
| IDN? | Returns the detailed instrument ID and software version information. |
| MODE? | Returns the operating mode (MEASUREMENT, CALIBRATION, DIAGNOSTIC, CALWAITING). |
| MODESTR? | Returns a string that describes what a calibration or diagnostic procedure is doing. |
| ONTIME? | Returns the time in minutes since the power was turned on. |
| **5790B Calibration, Testing, and Diagnostics Commands** | |
| ABORT | Aborts a measurement, calibration, or diagnostic procedure. |
| CAL_AC | Begins an interactive ac calibration procedure for an ac range. |
| CAL_AC? | Lists the steps of an interactive calibration procedure or a portion of a procedure as it would run when requested with a CAL_AC command with the same parameters. |
| CAL_BACKUP | Makes it so that the next CAL_NEXT command redoes the previously finished calibration step. |
| CAL_CLST? | Lists the symbolic names for all the calibration constants for a specified range. |
| CAL_CONST? | Returns the value of a particular calibration constant. |
| CAL_COUNT? | Returns the number of times the Calibration state has been unsecured. |
| CAL_DATE | Sets the verification date to the date returned by the internal clock/calendar. |
| CAL_DATE? | Returns the verification date or the most recent calibration. See the command description for more information. |
| CAL_DAYS? | Returns the number of days elapsed since the last verification or calibration. See the command description for more information. |
| CAL_DC | Begins a calibration procedure for a dc range. As in CAL_AC, this merely specifies which step the next CAL_NEXT command does. |
| CAL_DC? | Lists the steps of an interactive calibration procedure or a portion of a procedure as it would run when requested with a CAL_DC command that uses the same parameters. |
| CAL_FPT | Corrects the reference given for an ac calibration step after the fact, and as a result changes the resulting calibration constant or constants. |
| CAL_FPT? | Supplies the first two parameters to be used with a CAL_FPT to correct the next calibration step to be performed. |
| CAL_FREQ | Executes the frequency calibration procedure. An error is generated if the frequency or amplitude measurement is out of range. If an error occurs, the frequency calibration procedure is not executed. |
| CAL_I2 | Begins the INPUT 2 vs. INPUT 1 calibration procedure. |
| CAL_I2? | Lists the steps in the INPUT 2 vs. INPUT 1 calibration procedure. |
| CAL_INPUT? | Returns the input to which the reference will be applied for the next calibration step. |
| CAL_INTV | Sets the calibration interval. This is stored in nonvolatile memory and used to calculate the output uncertainty. |

**Table 6-6. Command Summary (cont.)**

| 5790B Calibration, Testing, and Diagnostics Commands | |
|---|---|
| CAL_INTV? | Returns the calibration interval. |
| CAL_NEXT | Initiates the next calibration point. |
| CAL_NEXT? | Returns the value of the next point to be calibrated when in the middle of calibrating a range. |
| CAL_OFF | Cancels any interactive calibration underway (that is, one started with the CAL_AC, CAL_I2, or CAL_DC commands). |
| CAL_PASSWD | Changes the calibration passcode. |
| CAL_RCSV? | Returns a comma-separated-value format report similar to what is saved on a USB flash drive. |
| CAL_RPT? | Returns a listing of a calibration report through the remote control port. |
| CAL_SECURE | Locks/unlocks calibration security. |
| CAL_SECURE? | Returns the lock state of calibration security. |
| CAL_SHIFT? | Returns the calibration shift for a single calibration point. |
| CAL_USB | Saves the calibration report to a USB flash drive. |
| CAL_SKIP | Advances to the next step of an interactive procedure without executing the step (like a CAL_NEXT except the step is not executed). |
| CAL_SLST? | Returns the calibration shifts for a group of service calibration points. |
| CAL_SPEC? | Returns the uncertainty specification for a specified input value, range, and frequency. |
| CAL_STLST? | Lists the calibration constant groups that have been updated but not saved (and therefore, how many would be written to nonvolatile memory by a CAL_STORE command with the same argument). |
| CAL_STORE | Stores calibration constants in the specified group list into nonvolatile memory. |
| CAL_STORE? | Lists how many calibration constant groups have been modified but not saved (this is like CAL_STLST? except only the initial number is given). |
| CAL_TEMP | Sets the ambient temperature value stored when a calibration procedure is done. Once set, the temperature is used for all calibration activities until changed. |
| CAL_TEMP? | Returns the recorded ambient temperature of calibration. |
| CAL_WBCABLE | Run the wideband cable calibration procedure. |
| CAL_WBLIN | Start the interactive wideband linearity calibration procedure. |
| CAL_WBLIH? | Lists the steps of the interactive wideband linearity calibration procedure. |
| CAL_ZERO | Executes internal dc zeros calibration. |
| CMDSTR? | Returns the command string that caused the last error. |

**Table 6-6. Command Summary (cont.)**

| 5790B Calibration, Testing, and Diagnostics Commands | |
|---|---|
| DIAG | Runs a self-diagnostic routine. |
| DIAGFLT | Sets the Product response to errors that occur during execution of diagnostics under remote control. (Nonvolatile.) |
| DIAGFLT? | Returns the setting of the response to errors that occur during diagnostics executed under remote control. |
| ERR? | Returns the first error code and description from the Product error queue. This error is then taken off the queue. |
| EXPLAIN? | Explains an error code. (5700A/5720A/5730A compatibility.) |
| FAULT? | Returns an error code and takes the error off the error queue. (5700A/5720A/5730A compatibility.) |
| SH_CALDATE | Sets the calibration date for the selected shunt. |
| SH_CALDATE? | Returns the calibration date for the selected shunt. |

## Alphabetical List of IEEE-488.2 Common Commands

### *CLS

(Clear status.) Clears the ESR, ISCR0 and ISCR1, the error queue, and the RQS bit in the status byte. This command terminates a pending operation complete (*OPC).

#### Parameter

None

### *ESE

Loads a byte into the Event Status Enable Register, described under "Checking Product Status."

#### Parameter

The decimal equivalent of the 8-bit binary number to load into the register. Each binary digit in the register has a meaning as described in this section under "Checking Product Status". You can also send a binary, octal, or hexadecimal number if you precede the number with #b, #o, or #h, respectively. (A number without a preceding designator is taken as decimal.)

#### Example

```
*ESE 145
```

Sets the register to 10010001 (128+16+1), enabling only bits 7 (PON), 4 (EXE), and 0 (OPC).

### *ESE?

Reads the contents of Event Status Enable register, described under "Checking Product Status."

#### Parameter

None

#### Example

```
*ESE?
```

Returns "140" if bits 2 (QYE), 3 (DDE), and 7 (PON) are enabled (1) and the rest of the bits are disabled (0). (See "Checking Product Status" for details.)

### *ESR?

Returns the byte from the Event Status Register and clears the register. The ESR is described under "Checking Product Status."

#### Parameter

None

#### Response

(Integer) Decimal equivalent of the register byte.

#### Example

```
*ESR?
```

Returns "140" if bits 2 (QYE), 3 (DDE), and 7 (PON) are set (1) and the rest of the bits are reset (0). (See "Checking Product Status" for details.)

### *IDN?

Identification query. Returns the instrument model number, serial number, and firmware revision levels for the main and inguard CPUs. (Sequential command.)

#### Parameter

None

#### Response

(IAD) A message containing five fields separated by commas, as

follows:

1. Manufacturer (FLUKE)
2. Model number (5790B)
3. Serial number
4. Firmware revision level for the Main CPU and Guard Crossing CPU

#### Example

```
FLUKE,5790B,7649820, v1.08+v1.01 FPGAv4
```

### *LRN?

Learns the current setting of the Product . The response to this command is a string that when sent back to the Product at a later time recreates the operational state. This response uses the *LRN command which is reserved for this purpose and is not documented beyond here.

#### Parameter

None

#### Response

An IAD that when later sent to the Product recreates the settings present at the time of the *LRN? command. The following operating parameters are saved by this command:

- Input Source
- Auto/Lock Range
- Range (if Locked)
- EX TRIG
- EX GRD
- HIRES setting
- Digital Filter Mode
- Digital Filter Restart
- Reference Delta Units

### *OPC

Enables setting of bit 0 (OPC for "Operation Complete") in the Event Status Register to 1 when all pending device operations are complete.

*Note*

*If you use this command for a non-measurement execution to complete, turn off continuous triggering first. If you do not turn off measurements, *OPC (or *OPC? or *WAI) will wait for a measurement to complete. Example: "EXTRIG ON; CAL_STORE ALL; *OPC".*

#### Parameter

None

### *OPC?

Returns a 1 after all pending operations are complete. This commands causes program execution to pause until all operations are complete. (See also *WAI.)

#### Parameter

None

#### Response

(Integer) 1 after all operations are complete.

## *OPT?

Query which hardware options are installed.

### Parameter

None

### Response

| | |
|---|---|
| 0 | No wideband installed |
| WBND | 30 MHz option installed |
| WBEX | 50 MHz option installed |
| WBAF | 50 MHz/AF option installed |

## *PUD

(Protected user data command.) This command allows you to store a string of bytes in nonvolatile memory. The Calibratration secure state must be set to off. Also see the RPT_STR command, which has a similar function, except the RPT_STR string is printed on calibration shift reports.

### Parameter

Binary Block Data

### Example

To store the string "CAL LAB NUMBER 1" in the protected user data area.

```
*PUD #0CAL LAB NUMBER 1\<Line Feed with EOI\>
or
*PUD #216CAL LAB NUMBER 1
```

*Note*

*The 2 indicates that there are two digits to follow (in this case, "16"), and the 16 indicates that there are 16 characters including space characters in the remainder of the *PUD message (in this case, CAL LAB NUMBER 1).*

This type of data is called Binary Block Data in the IEEE-488.2 Standard. In the Product, however, you don't need to use this protocol. The parameter:

```
"CAL LAB NUMBER 1"
```

works exactly the same.

## *PUD?

Returns the contents of the *PUD (Protected User Data) memory. (Sequential command.)

### Parameter

None

### Response

Binary Block Data. The maximum response is 64 characters.

### Example

```
*PUD?
```

Returns:

```
"#216CAL LAB NUMBER 1"
```

Assuming that this is stored as in the example for PUD* above.

### *RCL

Restores the Product operating state to a previous setup saved using the *SAV command. This command together with *SAV gives you up to 16 operating state memories. The following operating parameters are saved by this command:

- Input Source
- Auto/Lock Range
- Range (if Locked)
- EX TRIG
- EX GRD
- HIRES setting
- Digital Filter Mode
- Digital Filter Restart
- Reference Delta Units

Parameter

(Integer) 0 through 15, for the operating state memory number

### *RST

Resets the state of the instrument to the power-up state as described in Chapter 4, except continuous triggering is stopped. The TRIG command is required to start continuous triggering after *RST. This command holds off execution of subsequent commands until it is complete. (See Example.)

Parameter

None

Example

If you send the compound command "*RST;*OPC?", the *OPC? is not waiting for *RST to complete, it is waiting for the next measurement to complete.

### *SAV

Saves the current Product operating state in memory for later use with the *RCL command. This command together with *RCL gives you up to 16 operating state memories. Once an operating state is saved, it is nonvolatile.

Parameter

An integer 0 through 15, for one of the 16 operating state memory locations

### *SRE

Loads a byte into the Service Request Enable register (SRE), described under "Checking Product Status."

Parameter

The decimal equivalent of the binary number to load into the register. You can also send a binary, octal, or hexadecimal number if you precede the number with #b, #o, or #h, respectively. (A number without a preceding designator is taken as decimal.)

Example

```
*SRE 56
```

Enables bits 3 (EAV), 4 (MAV), and 5 (ESB) in the Service Request Enable register.

### *SRE?

Returns the byte from the Service Request Enable register, described under "Checking Product Status."

#### Parameter

None

#### Response

(Integer) The contents of the Instrument Status Register in decimal.

### *STB?

Returns the status byte. The status byte is described under "Status Information."

#### Parameter

None

#### Response

(Integer) Decimal equivalent of the status byte.

#### Example

```
*STB?
```

Returns "72" if bits 3 (EAV) and 6 (MSS) are set (1) and the rest of the bits are reset (0).

### *TRG

Triggers a measurement (equivalent to TRIG).

#### Parameter

None

### *TST?

Initiates a series of self-tests, then returns a "0" for pass or a "1" for fail. If any faults are detected, they are logged into the fault queue where they can be read by the ERR? query.

#### Parameter

None

#### *Response*

(Integer) 0 = Pass, 1 = Fail

### **WAI*

Wait-to-continue command. This command prevents further remote commands from being executed until all previous remote commands have been executed. (See also *OPC.)

Parameter

None

Example

If you had sent a TRIG command, you can cause the Product to wait until the measurement has settled before continuing on to the next command by following TRIG with a *WAI command. This is useful because TRIG is an overlapped command, which means the Product would normally go on to process other commands before completing the TRIG command.

## *Alphabetical List of 5790B Device-Dependent Commands*

### *ABORT*

Aborts a measurement, calibration or diagnostic procedure, or calibration step in progress. This command holds off execution of subsequent commands until it is complete. (See Example.)

Parameter

None

Example

If you send the compound command "ABORT;*OPC?", the *OPC? is not waiting for ABORT to complete, it is waiting for the next measurement to complete.

### *ADDR*

Sequential command. Sets the GPIB interface bus address.

Parameter

Bus address

Example

```
ADDR 6
Sets the GPIB interface bus address to 6
```

### *ADDR ?*

Sequential command. Gets the GPIB interface bus address.

Parameter

None

*Response*

Integer

Example

```
ADDR?
```

Returns 6 if the gpib interface bus address is set to 6

### *AMPS?*

Return corrected current shunt equivalent given the selected shunt.

Parameter

None

Response

1. (real) Amplitude
2. (String) Units

Example

```
AMPS?
1.1648312E+01,A
```

### *AMPS_DELTA?*

Returns the shunt-corrected difference/ratio between the measurement and the reference

Parameter

None

Response

1. (real) Amplitude
2. (String) PPM or PCT

Example

```
AMPS_DELTA?
+4.0E+00,PPM
```

### *AMPS_PKPK?*

Returns the corrected current shunt peak-to-peak equivalent given the selected shunt value and waveform type.

Parameter

SINE,SQUARE,TRI,TRUNC

Response

1. (real) Amplitude
2. (String) Units

Example

```
AMPS_PKPK? SINE
3.2830614E+00,A
```

### AMPS_REF?

Returns the reference value against which shunt-corrected DELTAs are computed.

Parameter

None

Responses:

1. (real) The reference value.
2. (real) The frequency of the reference. (If references at two different frequencies were averaged, the second frequency is returned.)
3. (Integer) The number of readings used to generate the reference value.

   0 = reference off, 1 = reference set, 2 = reference averaged.
4. (CRD) The input connector at which the last reference was measured, for example, INPUT1, or NONE if no reference is set.

### BRIGHTNESS

Sets the brightness of the GUI display.

Parameter Integer, 0 to 100, where 0 is dimmest and 100 is brightest.

Example

```
BRIGHTNESS 50
```

Sets the display to half brightness (the default value).

### BRIGHTNESS?

Returns the brightness setting.

### CAL_AC

Begins an interactive ac calibration procedure for one range or all ranges. This does not do a calibration step, but sets up the Product so the next CAL_NEXT command initiates the first step and the next CAL_NEXT? command returns the first step.

Parameters

1. INPUT1 or INPUT2 (The input to be used, signifies normal ac calibration), or WBND for Option 5790B/3 or Option 5790B/5 Wideband flatness calibration.
2. (Optional) A number that defines the range amplitude (same as for the RANGE command). If this parameter is included, do only the specified range; if not included, do all ranges.
3. (Optional only if parameter 2 is present; prohibited otherwise) A number that specifies which step to jump to of the procedure for the specified range.

### Example

The sequence of commands for calibrating an entire range is:

```
CAL_TEMP 23.5 (optional)
CAL_AC <input>, <amplitude> input is location, amplitude tells range
CAL_NEXT <amplitude>   this is the first step (frequency is implicit)
CAL_NEXT <amplitude>   this is the last step
```

An error occurs if either the entered amplitude is out of range or the measured input is out of range. The CAL_NEXT? command gives the nominal amplitude and frequency for the next CAL_NEXT command and returns 0,-1 after the last CAL_NEXT command has been done for a range.

## *CAL_AC?*

Lists the steps of an interactive calibration procedure or a portion of a procedure as it would run when requested with a CAL_AC command with the same parameters.

### Parameters

1. INPUT1 or INPUT2 (The input to be used, signifies ac calibration), or WBND for Option 5790B/3 or Option 5790B/5 Wideband calibration
2. (Optional) A number that defines the range amplitude (same as for the RANGE command). If this parameter is included, list only the steps for the specified range; if not included, list steps for all ranges.
3. (Optional only if parameter 2 is present; prohibited otherwise) A number that specifies which step to jump to to begin listing steps for the specified range.

### Response

(IAD) A list in the following form:

```
<# of ranges><EOL>
<range 1 max>,<# of steps in range><EOL>
<1st step amplitude in volts>,<1st step frequency in Hz><EOL>
...
<last step amplitude>,<last step frequency><EOL>
<range 2 max> etc.
```

### Example

```
CAL_AC? INPUT1,2.0
Gives the response:
1
2.200000e+00,4
2.000000e+00,1.000000e+01
2.000000e+00,1.000000e+02
2.000000e+00,1.000000e+05
2.000000e+00,1.000000e+06
```

## *CAL_BACKUP*

If a calibration step has been done since the last CAL_AC or CAL_DC command, this command backs the CAL_NEXT pointer one step. (After this command, a CAL_NEXT command redoes the most recent step.) CAL_BACKUP generates an error if no cal procedure is underway, or if a CAL_SKIP has occurred since the last step was done.

### Parameter

None

### *CAL_CLST?*

Lists the symbolic names and values for a group of calibration constants.

#### Parameters

1. Which constants to list. This parameter may be a single constant (for example, DI_7V) or a group of constants (for example, AC_7V), or a group of groups (for example, AC, or ALL). Refer to Appendix B for a listing of calibration constants and group names, or use the command " CAL_RPT? CONSTS" to print a list of all calibration constants.
2. ACTIVE, STORED, OLD, or DEFAULT.

#### Response

(String) A list of the selected calibration constant names and values. The form is:

```
"<EOL>
<total><EOL>
<name>,<value><EOL>
<name>,<value><EOL>
etc.
```

### *CAL_CONST?*

Returns the value of a particular calibration constant from the active set.

#### Parameter

The symbolic name of the calibration constant (for example, DI_7V). Refer to Appendix B for a listing of calibration constant symbolic names, or use the command " CAL_RPT? CONSTS" to print a list of all calibration constants.

#### Response

(Float) A number signifying the value of the constant.

### *CAL_COUNT?*

Sequential command. Returns the number of times calibration constants have been saved at the end of a calibration procedure (except for DC Zeros)

#### Response

integer

#### Parameter

None

#### Example

```
CAL_COUNT?
```

Returns 34 if calibration constants have been saved 34 times.

## *CAL_DATE*

This sets the verification date to the date returned by the internal clock/calendar; the calibration mode must be unsecured.

### Parameter

None

## *CAL_DATE?*

Returns the date of the most recent verification or calibration.

### Parameters

No argument (Returns the date of the most recent verification, as set by CAL_DATE)

| | |
|---|---|
| ZERO | (Returns the date of the most recent zero calibration) |
| MAIN | (Returns the date of the most recent main input adjustment) |
| WBND | (Returns the date of the most recent Wideband input adjustment) |
| SERVICE | (Returns the date of the most recent Service adjustment) |

CAL_DATE? also emulates 5790A syntax with two parameters:

1. ACTIVE, STORED, or OLD (which set the date comes from)
2. One of the following keywords:

| | |
|---|---|
| DC | (Returns the specified date of DC adjustment) |
| AC | (Returns the specified date of AC adjustment) |
| ZC | (Returns the specified date of zero calibration) |
| WDC | (Returns the specified date of Wideband gain adjustment) |
| WAC | (Returns the specified date of Wideband flatness adjustment) |
| ALL | (Returns the specified date of calibration) |

### Response

(Integer) Date in the format defined by the DATEFMT command (or in the utility menus).

### *CAL_DAYS?*

Returns the number of days elapsed since the most recent verification or calibration.

#### Parameters

- No argument (Returns the number of days since the most recent verification, as set by CAL_DATE)
- MAIN (Entire main input calibration)
- WBND (Wideband calibration)
- SERVICE (Service calibration)
- DC (DC calibration)
- AC (AC calibration)
- ZC (DC zeros calibration
- WDC (Wideband 1 kHz calibration)
- WAC (Wideband Flatness)
- ALL (All of the above)
- A group name from Appendix C, for example, AC_2_2VResponseResponse
- (Integer) The number of elapsed days.

#### Response

(Integer) The number of elapsed days.

### *CAL_DC*

Begins a dc calibration procedure for one range or all ranges. As in CAL_AC, this specifies which step the next CAL_NEXT command initiates.

#### Parameters

1. INPUT1 or INPUT2 (The input to be used; signifies dc calibration), or WBND for Option 5790B/3 or Option 5790B/5 Wideband gains calibration
2. (Optional) A number that defines the range amplitude (same as for the RANGE command). If this parameter is included, do only the specified range; if not included, do all ranges.

#### Example

An example sequence of commands for calibrating a range (in this case, the 220 mV range) is as follows:

```
CAL_TEMP 23.5
CAL_DC INPUT2, 200 mV
CAL_NEXT 200 mV
CAL_NEXT -200 mV
```

An error occurs if either the entered value is out of range or the measured input is out of range.

## CAL_DC?

Lists the steps of an interactive calibration procedure or a portion of a procedure as it would run when requested by a CAL_DC command with the same parameters.

### Parameters

1. INPUT1 or INPUT2 (The input to be used, signifies dc calibration), or WBND for Option 5790B/3 or Option 5790B/5 Wideband gains calibration.
2. (Optional) A number that defines the range amplitude (same as for the RANGE command). If this parameter is included, list only the steps for the specified range; if not included, list steps for all ranges.

### Response

(IAD) A list in the following form:

```
<# of ranges><EOL>
<range 1 max>,<# of steps in range><EOL>
<1st step amplitude in volts>,<1st step frequency in Hz><EOL>
<last step amplitude>,<last step frequency><EOL>
<range 2 max> etc.
```

## CAL_FPT

Corrects the reference given for an ac calibration step after the fact, and as a result changes the calibration constant or constants determined in that step.

### Parameters

1. A number signifying the range amplitude (as in the RANGE command)
2. The number of the step to correct (obtained using the CAL_FPT? command).
3. The updated reference value divided by what was given as the reference when the calibration step was run. (1.0 means no change, more than 1.0 means the reference is bigger than you said when you did the CAL_NEXT.)

### Example

```
CAL_FPT?
(returns) 2.20000,0
CAL_NEXT?
(returns) 2.0E+0,1.00E+6
CAL_NEXT 2.0
CAL_FPT 2.2,0,1.00019
```

## CAL_FPT?

Supplies the first two parameters to be used with a CAL_FPT to correct the next calibration step to be performed.

### Parameter

None

### Response

1. (Float) A number signifying the range amplitude (as in the RANGE command)
2. (Integer) The number of the step to correct (using the CAL_FPT command).

### CAL_FREQ

Executes the frequency calibration procedure. An error is generated if the frequency or amplitude measurement is out of range. If an error occurs, the frequency calibration procedure is not executed. This step is part of service calibration. This command requires that you set the CALIBRATION MODE state to SERVICE and unlock calibration security using the CAL_SECURE command.

Parameters

1. INPUT1 or INPUT2
2. A number signifying the input frequency, including units. If no units are given, HZ are assumed (value must be between 900 Hz and 1.1 kHz inclusive).

### CAL_I2

Begins the INPUT 2 vs. INPUT 1 calibration procedure. This proceeds with CAL_NEXT, CAL_NEXT?, and so on like CAL_AC and CAL_DC, except you must use CAL_INPUT? to determine the correct input to apply the calibration voltage. This step is part of service calibration. This command requires that you set the CALIBRATION MODE CAL_SECURE state to SERVICE and unlock calibration security using the CAL_SECURE command.

Parameter

None

### CAL_I2?

Lists the values for the INPUT 2 vs. INPUT 1 calibration procedure. It does not list the input to which voltages are applied. Use CAL_INPUT? for that purpose.

Parameter

None

Response

(IAD) A list in the same form as CAL_AC? and CAL_DC?.

### CAL_INPUT?

Returns the input to which you will apply a reference for the next step.

Parameter

None

Response

(CRD) INPUT1, INPUT2, WBND, or NONE

### CAL_INTV

Sets the calibration interval. This is stored in nonvolatile memory and used to calculate the output uncertainty.

Parameter

The number of days in the calibration interval. Must be 90, 365, or 730.

### *CAL_INTV?*

Returns the calibration interval.

Parameter

None

Response

(Integer) The number of days in the calibration interval (90, 365, 730).

### *CAL_MODE?*

Returns the setting of the CALIBRATION MODE state. (CAL_SW? returns the calibration security state (secure or unsecure).

Parameter

None

Response

0 = not in service calibration mode, 1 = cal secure mode for SERVICE CALIBRATION is off

### *CAL_NEXT*

Initiates the next calibration point. An error occurs if the response from CAL_NEXT? would have been 0,-1 (a series of calibration steps must be begun using a CAL_AC or CAL_DC or CAL_I2 command). Note that in ac calibration the frequency is implicit (the proper value can be obtained with the CAL_NEXT? command).

*Note*

*This initiates the calibration for this step. Make sure the specified reference is connected and stable before executing CAL_NEXT.*

All the same errors that occur with calibration from the front panel can also occur here (for example if the reference amplitude or frequency is out of tolerance).

Parameter

(Optional. If omitted, the nominal amplitude is used.) A number signifying reference amplitude (must be within a certain percentage of the expected amplitude, obtainable using the CAL_NEXT? command.

### CAL_NEXT?

Returns the value of the next point to be calibrated when in the process of calibrating a range. Otherwise, this returns 0.0,-1.0.

#### Parameter

None

#### Response

1. (Float) The nominal amplitude of the expected value for the next calibration point. The units are assumed to be volts. For example, if the Product has calibrated the positive polarity for a dc range, the CAL_NEXT? query will return the negative of the reference value used for the positive polarity calibration.
2. (Float) The frequency of the next point to be calibrated. The units are assumed to be Hertz.

#### Example

```
CAL_DC INPUT2, 150 MV
CAL_NEXT?
2.0E-01,0.0E+00
```

If the Product has calibrated the first point of an ac range, the CAL_NEXT? query returns the amplitude and frequency of the next point to be calibrated (the amplitude returned is what would be the default when doing this calibration from the front panel).

```
CAL_AC INPUT2, 150 MV
CAL_NEXT?
2.0E-01,1.0E+06
```

If the Product is not in the middle of calibrating a range, the CAL_NEXT? query returns the values 0,0.

### CAL_OFF

Cancels any interactive calibration underway (that is, one started with the CAL_AC, CAL_DC, or CAL_I2 commands).

#### Parameter

None

### CAL_PASSWD

Sequential command. Sets security password. The Calibration secure state must be set to off or an execution fault results.

#### Parameter

1. Current security passcode (quoted string consisting of up to 8 decimal digits).
2. New security passcode (quoted string consisting of up to 8 decimal digits).

#### Example

```
CAL_PASSWD "5790", "12345"
```

Sets the security passcode to 12345.

### *CAL_RPT?*

Returns a listing of a calibration report.

Parameters

- ACTIVE (The shifts resulting from the last calibration)
- STORED (The shifts resulting from the last stored calibration)
- CONSTS (A list of all calibration constants)

*Response*

(IAD) The report followed by the EOFSTR.

### *CAL_RCSV?*

Sequential command. Returns a report in CSV format for a specified calibration activity (see Chapter 7 for format details).

Parameter

ACTIVE (The shifts resulting from the last calibration)

STORED (The shifts resulting from the last stored calibration)

CONSTS (A list of all calibration constants)

Response

(String)

<formatted report>

### *CAL_SECURE*

Sequential command. Lock/unlocks the calibration security state by use of a passcode. The passcode is entered as a quoted string of decimal digits (for example, "5790"). To secure the Calibration state, no passcode is necessary. If an incorrect password is entered, the Calibration state will automatically be resecured if it was unsecured.

Parameter

1. ON/OFF
2. <passcode>

Example

```
CAL_SECURE OFF, "5790"
```

Unsecures Calibration.

Example

```
CAL_SECURE ON
```

Secures Calibration.

### *CAL_SECURE?*

Sequential command. Returns the current security state of Calibration.

Parameter

None

Response

String

Example

```
CAL_SECURE?
```

Returns ON if the Calibration state is secured.

### *CAL_SHIFT?*

Calculates and returns the difference (shift) in the results of updated calibration constants at a specific input, range, and frequency.

Parameters

1. The shift to display from the list:
   - ACTIVE (the shift from STORED to ACTIVE)
   - STORED (the shift from ACTIVE to STORED)
2. Input binding post (WBND, INPUT1, INPUT2, or AUX)
3. The value at which to show the shift. This parameter selects the range the same way as in the RANGE command.
4. Frequency at which to show the shift. Use 0.0 for dc.

Response

(Float) The shift in PPM

### *CAL_SKIP*

Advances to the next step of an interactive procedure without executing the step (like a CAL_NEXT except the step isn't executed). This is the same as when you push the **Skip Step** softkey during front panel controlled calibration.

Parameter

None

### *CAL_SLST?*

Calculates and returns the shift (as in CAL_SHIFT?) for the given range and input at +DC, -DC, and each service-calibrated frequency point.

Parameters

1. The shift to display from the list:
   - ACTIVE (the shift from STORED to ACTIVE)
   - STORED (the shift from ACTIVE to STORED)
2. Input binding post (WBND, INPUT1, INPUT2, or AUX)
3. The value at which to show the shift. This parameter selects the range the same way as in the RANGE command.

Response

(Float) The shift in PPM

## CAL_SPEC?

Calculates and returns the absolute uncertainty specification for a specific input, value (and range), and frequency. This is similar to UNCERT?, except CAL_SPEC uses the parameters you send rather than the most recent input.

### Parameter

1. Input binding post (WBND, INPUT1, INPUT2, or AUX)
2. The value at which to show the specification. This parameter selects the range the same way as in the RANGE command.
3. Frequency at which to show the specification. Use 0.0 for dc.

### Response

(Float) The specification in PPM. If there is no specification for the input, 0 is returned.

## CAL_STLST?

Lists the calibration constant groups that have been updated but not saved.

### Parameters

- DC (DC calibration)
- AC (AC calibration)
- ZC (DC zeros calibration)
- WDC (Wideband 1 kHz calibration)
- WAC (Wideband Flatness)
- ALL (All of the above; use this to list CAL_I2 constants)
- A group name from Appendix C, for example, AC_2_2V

### Response

(String) The list expressed as a string. The form is:

\<number of groups\>,\<1st group\>, etc.

### Example

```
CAL_STLST? DC
1,DC_DAC
```

## CAL_STORE

Stores all calibration constants in the specified group list into nonvolatile memory. The CALIBRATION secure state must be set to off or an execution fault results. See CAL_SECURE. (Overlapped command.)

### Parameters

- DC (DC calibration)
- AC (AC calibration)
- ZC (DC zeros calibration)
- WDC (Wideband 1 kHz calibration)
- WAC (Wideband Flatness)
- ALL (All of the above; use this to store CAL_I2 constants)
- A group name from Appendix C, for example, AC_2_2V

### *CAL_STORE?*

Tells how many calibration constant groups have been updated but not saved. (This is like CAL_STLST? except only the initial number is given.)

Parameters

- DC (DC calibration)
- AC (AC calibration)
- ZC (DC zeros calibration)
- WDC (Wideband 1 kHz calibration)
- WAC (Wideband Flatness)
- ALL (All of the above; use this to check CAL_I2 constants)

Response

(Integer) 0 if no calibration constant groups have been updated; otherwise, the number of groups.

### *CAL_SW?*

Returns the calibration security state (secure or unsecure). (CAL_MODE? returns the CALIBRATION MODE state setting).

Parameter

None

Response

(Integer) 0 = NORMAL (secure), 1 = unsecure

### *CAL_TEMP*

Sets the temperature for calibration. Do this before you run any calibration procedures. Once set, the temperature is used for all calibration activities until changed. If not set before a calibration activity is complete, the Product uses a default of 23.0 °C.

Parameter

A number signifying the temperature in °C.

### *CAL_TEMP?*

Returns the temperature used for all calibration activities (ie: the value set by CAL_TEMP).

Parameter

None

Response

(Real) The temperature in °C.

## CAL_USB

Overlapped command. Saves a calibration report to a USB thumb drive connected to the front panel USB host port. This command may take 1-2 minutes to execute.

### Parameter

ACTIVE (The shifts resulting from the last calibration)

STORED (The shifts resulting from the last stored calibration)

CONSTS (A list of all calibration constants)

### Example

```
CAL_USB STORED
```

## CAL_WBCABLE

Run the wideband cable calibration procedure. Refer to the service manual for the correct reference value.

### Parameter

Parameter is the reference amplitude in V, MW or DBM (the parameter must include the unit)

### Example

```
CAL_WBCABLE 0dbm
```

## CAL_WBLIN

Start the interactive wideband linearity calibration procedure. Refer to the service manual for more information. This command requires that you set the CALIBRATION MODE CAL_SECURE state to SERVICE and unlock calibration security using the CAL_SECURE command.

### Parameter

None

## CAL_WBLIH?

Lists the steps of the interactive wideband linearity calibration procedure.

### Parameter

None

### Example

```
CAL_WBLIN?
```

### Returns

```
1
0.000000e+00,4
2.000000e00,1.000000e+07
2.000000e00,3.000000e+07
6.000000e-01,1.000000e+07
6.000000e-01,3.000000e+07
```

### CAL_ZERO

Executes dc zeros calibration. An error is generated if the Product cannot make a measurement (ie, if the short is not applied to the input as specified in the normal operation section of this SRS). (Overlapped command.)

#### Parameter

None

### CLOCK

Sets the clock/calendar. If the second parameter is present, the CALIBRATION security state must be set to off or an execution fault results.

#### Parameters

1. Time in 24-hour format as HHMMSS
2. (Optional) Date in the format controlled by the DATEFMT command

#### Examples:

```
CLOCK 133700, 071712
```

Sets the clock/calendar to 1:37 p.m., July 17, 2012. (Assuming DATEFMT = MDY.)

```
CLOCK 080000, 100312
```

Sets the clock/calendar to 8:00 a.m., March 10, 2012. (Assuming DATEFMT = DMY.)

### CLOCK?

Returns the setting of the clock.

#### Parameter

None

#### Response

1. (Integer) Time as HHMMSS.
2. (Integer) Date in the format controlled by the DATEFMT command.

#### Example

```
CLOCK?
```

Returns

```
150000,090112
```

if the clock/calendar is set to 3 p.m., September 1, 2012.

### CMDSTR?

Returns the command string (if possible) associated with the last error.

Parameter

None

Response

(String) The erroneous command string

### COMM

Select the remote interface (SERIAL, GPIB, ENET, USB).

If you select another interface remotely, the change takes place immediately.

Parameter

SERIAL,GPIB,ENET,USB

### DATEFMT

Sets the format in which dates are entered and returned (and shown on the front panel). This setting is kept in nonvolatile memory.

Parameters

- MDY (for MMDDYY in remote and MM/DD/YY on the display)
- DMY (for DDMMYY in remote and DD.MM.YY on the display)
- YMD (for YYMMDD in remote and YYMMDD on the display)

### DATEFMT?

Returns the present date format setting.

Parameter

None

Responses

(CRD)

- MDY (for MMDDYY in remote and MM/DD/YY on the display)
- DMY (for DDMMYY in remote and DD.MM.YY on the display)
- YMD (for YYMMDD in remote and YYMMDD on the display)

### DBM?

Returns (50ohm) dBm power equivalent of the reading. This is valid only for wideband.

Parameter

None

Response

1. (Real) Amplitude
2. (String) Units

Example

```
DBM?
2.0109E+01,DBM
```

### DELTA?

Returns the delta (transfer) value from the Product. This is the difference between the reference value in memory and the present input. (Also see the DUNIT command.)

Parameters

None

Responses:

1. (Float) the transfer value. The value is 0 if no reference has been set.
2. (String) PPM, PCT, V, RATIO as set by the DUNIT command.

### DFILT

Sets the digital filter parameters. The default is OFF.

Parameter

1. OFF, SLOW, MEDIUM, or FAST (the setting for mode)
2. (Optional) FINE, COARSE, or MEDIUM (the setting for restart threshold)

### DFILT?

Returns the digital filter parameter settings.

Parameter

None

Response

1. (CRD) OFF, SLOW, MEDIUM, or FAST (the setting for mode)
2. (CRD) FINE, COARSE, or MEDIUM (the setting for restart threshold)

### DHCP

Sequential command. Enables/disables DHCP (Dynamic Host Configuration Protocol) for LAN operation.

Parameter

ON (enables DHCP operation)

OFF (disables DHCP operation)

### DHCP?

Sequential command. Returns the current state of the DHCP enable setting.

Parameter

None

Response

(CRD)

Example

```
DHCP?
```

Returns ON if DHCP is enabled.

### *DIAG*

Runs a self-diagnostics routine. If any errors are detected, they are logged into the error queue where they can be read by the ERR? query. The response to errors that occur during remote-controlled diagnostics depends on the setting of the DIAGFLT command. Use the ABORT command to abort a diagnostic procedure that is still running (not DIAG ABORT). (Overlapped long-term command.)

Parameter

Selects diagnostic routine to run or action to take if an error was encountered during remote-controlled diagnostics. The choices are:

- CONT (Continues execution of diagnostics after an error)
- ABORT (Terminates execution of diagnostics after an error)

### *DIAGFLT*

Determines the response to errors that occur during remote-controlled diagnostics. In all cases the error encountered is logged into the error queue before the Product takes any action as set by this command. The settings of this command are saved in nonvolatile memory. The default is "CONT".

Parameter

- HALT (Halts and waits for DIAG CONT or DIAG ABORT) if an error occurs
- ABORT (Terminates diagnostics if an error occurs)
- CONT (Diagnostics continues to completion, logging any more errors into the error queue as they are encountered. This is the default setting.)

### *DIAGFLT?*

Returns the setting of DIAGFLT.

Parameter

None

Response

(CRD) HALT, ABORT, or CONT (see the DIAGFLT command for meanings)

### *DUNIT*

Sets the delta unit value. (Also see the DELTA? command.) The default is PPM. (Nonvolatile.)

Parameter

PPM, PCT, V, or RATIO

### *DUNIT?*

Returns the currently programmed delta units.

Parameters

None

Response

(CRD) PPM, PCT, V, or RATIO

### EMULATE

Partially emulates a 5790A over the remote interface. This changes the model number in the *IDN? response. “Partially” means the command execution speed cannot be guaranteed when comparing a 5790A to a 5790B. If there are hard coded delays in your remote commands, the delays may need to be altered if issues are experienced. The 5790B does not support the 5790A commands: CAL_PR and ETIME?

#### Parameter

F5790A selects 5790A emulation; anything else selects normal 5790B behavior.

#### Example

```
EMULATE F5790A
```

Sets 5790A emulation.

### EMULATE?

Returns the state of emulation as set by the EMULATE command.

#### Parameter

None

#### Response

(CRD) 5790A for 5790A emulation, 5790B for 5790B emulation.

### ENETPORT

Sequential command. Sets the Ethernet port number.

#### Parameter

Port number

#### Example

```
ENETPORT 3490
```

Sets the Ethernet port number to 3490.

### ENETPORT?

Sequential command. Returns the Ethernet port number.

#### Parameter

None

#### Response

(Integer) Ethernet port number

#### Example

```
ENETPORT?
```

Returns 3490 if the Ethernet port number is set to 3490

### *EOL*

Sequential command. Sets the end of line terminator for outgoing data for a specified remote port.

Parameter

1. SERIAL, USB, ENET
2. CRLF, CR, LF

Example

```
EOL ENET, CR
```

Sets the end of line terminator for Ethernet communication to CR.

### *EOL?*

Sequential command. Returns the end of line terminator for outgoing data for a specified remote port.

Parameter

1. SERIAL, USB, ENET

Response

(CRD}

Example

```
EOL? SERIAL
```

Returns CRLF if the serial end of line terminator is set to CRLF.

### *EOFSTR*

Sets the End-Of-File character string. The maximum length is two characters. The EOF setting is saved when the power is turned off. (Nonvolatile overlapped command.)

Parameters

The EOF string (two characters maximum)

### *EOFSTR?*

Returns the End-Of-File character string

Parameter

None

Response

(String) The End-Of-File character string

### ERR?

Returns the first error code contained in the Product error queue, then removes that error code from the queue. Following the error code is an explanation of the error code, similar to but not always the same as the string you receive from the EXPLAIN? command. The explanation sent in response to this query can contain variables specific to a particular error event. (To get just the error number use FAULT?)

A zero value is returned when the error queue is empty, so to read the entire contents of the error queue, repeat ERR? until the response is:

```
"0,"No Error"
```

#### Parameter

None

#### Response

1. (Integer) The error code
2. (String) The error message string, formatted for display

### EXPLAIN?

Explains an error code. This command returns a string that explains the error code furnished as the parameter. The error code (same as the parameter) is originally obtained by sending the FAULT? query. (See the ERR? command, which returns both the error code and the explanation string.)

#### Parameter

The error code (an integer)

#### Response

The explanation of the error code, with the parameter (if there is one) shown as a percent sign followed by d, f, or s.

### EXTGUARD

Sets the GUARD connection to external or internal.

#### Parameter

non-zero (external guard), or OFF or 0 (internal guard)

### EXTGUARD?

Returns the setting of external or internal GUARD connection.

#### Parameter

None

#### Response

(Integer) 1 for external guard, 0 for internal guard

### EXTRIG

Enables or disables external (single) trigger mode. In external trigger mode, you need to send the TRIG, *TRG, or MEAS? command to start a measurement. The EXTRIG command corresponds with the EXTRIG front panel key.

#### Parameter

ON or non-zero (external trigger), or OFF or 0 (continuous trigger)

### *EXTRIG?*

Returns the internal or external trigger setting.

Parameter

None

Response

(Integer) 1 for external trigger, or 0 for internal trigger

### *FAULT?*

Returns the first error code contained in the Product error queue, and then removes that error code from the queue. You can use the EXPLAIN? query to get an explanation string for a specified error code. (See the ERR? command, which returns both the error code and the explanation string.)

A zero value is returned when the error queue is empty, so to read the entire contents of the error queue, repeat FAULT? until the response is "0".

Parameter

None

Response

(Integer) The error code

### *FIRSTIN*

Sets the input (INPUT 1 OR INPUT 2) chosen at power-up or reset. The setting is saved in nonvolatile memory.

Parameter

INPUT1 or INPUT2

### *FIRSTIN?*

Returns the setting of FIRSTIN; the input (INPUT 1 OR INPUT 2) chosen at power-up or reset.

Parameter

None

Response

(CRD) INPUT1 or INPUT2

### *FORMAT*

Use with extreme care. Restores the contents of the non-volatile memory to factory defaults. The non-volatile memory holds calibration constants and setup parameters. All calibration data is permanently lost. The Calibration security state must be set to OFF and the CALIBRATION MODE state must be set to SERVICE to replace ALL or CAL data, or an execution error occurs.

Parameter

- ALL (Replaces the whole contents with defaults)
- CAL (Replaces all cal constants with defaults)
- SETUP (Replaces setup parameters with defaults)

### GWADDR

Sequential command. Sets the Ethernet gateway address for LAN communication when NOT in DHCP mode.

#### Parameter

Gateway address (quoted string consisting of 4 decimal values bound between 0-255 separated by periods).

#### Example

```
GWADDR "129.196.136.1"
```

Sets the Etherent gateway address to 129.196.136.1

### GWADDR?

Sequential command. Returns the Ethernet gateway address for LAN communication when NOT in DHCP mode. When in DHCP mode, the response will be default.

#### Parameter

None

#### Response

String

#### Example

```
GWADDR?
```

Returns 129.196.136.1 if the gateway address is set to 129.196.136.1 and DHCP is not enabled. Returns default if DHCP is enabled.

### HIRES

Enables or disables higher resolution amplitude displays and remote responses as defined in Table 4-5.

#### Parameter

ON or non-zero for on, or OFF or 0 for off

### HIRES?

Returns the setting of the HIRES command for higher resolution amplitude displays and remote responses as defined in Table 4-5.

#### Response

(Integer) 1 for on, or 0 for off

### *IDN?*

Return detailed instrument ID and software version information.

#### Parameter

None

#### Example

```
Make: FLUKE
Model: 5790B
Serial #: 8675309
MAC address: 00:80:40:ff:00:19
Main Version: v1.08
Timestamp: 2015-05-12 11:41:03
git Branch: master
git ID: dd8f90596d6d8b6c70efc2a1111d72ddb0059552
Workspace: /evtfs/wg03/lancer/grponly/sw/Release/ogsrc
GUI Library: Qt 4.8.5
OS Build: Linux 20150420
A20 FPGA: v4 (2015-04-14)
Inguard: v=0.01 d=20140925 git=0abf8a13 fpga=5790b004
KKP: v1.00
Touch panel: EXC7200-0052v1001 v0210
```

### *INPUT*

Selects the active input connector.

#### Parameter

INPUT1, INPUT2, AUX, or WBND

### *INPUT?*

Returns the name of the active input connector.

#### Parameters

None

#### Response

(CRD) INPUT1, INPUT2, AUX, or WBND

### *IPADDR*

Sequential command. Sets the IP address for LAN communication when NOT in DHCP mode and with static IP addressing.

#### Parameter

IP address (quoted string consisting of 4 decimal values bound between 0-255 separated by periods).

#### Example

```
IPADDR "129.196.136.119"
```

Sets the Ethernet IP static address to 129.196.136.119

### IPADDR ?

Sequential command. Returns the IP address for LAN communication. When DHCP is enabled, this address will be the address allocated by the DNS server. When DHCP is disabled, this address will be the entered value of the static IP address.

#### Parameter

None

#### Response

String

#### Example

```
IPADDR?
```

Will return 129.196.137.45 if DHCP is enabled and the DNS server has allocated this address to the Product, or will return 129.196.136.119 if DHCP is disabled and the static address has been previously set to that address.

### ISCE0

Loads two bytes into the Instrument Status 1 to 0 Change Enable register described under "Checking Product Status."

#### Parameter

The decimal equivalent of the binary number to load into the register. You can also send a binary, octal, or hexadecimal number if you precede the number with #b, #o, or #h, respectively. (A number without a preceding designator is taken as decimal.)

#### Example

```
ISCE0 52
```

Loads 00000000 00110100 (binary) into the register, enabling bits 5 (MCCHG), 4

(MDCHG), and 2 (RNGCHG).

### ISCE0?

Reads the contents of the Instrument Status 1 to 0 Change Enable register described under "Checking Product Status."

#### Parameter

None

#### Response

(Integer) The contents of the Instrument Status 1 to 0 Change Enable register in decimal.

#### Example

```
ISCE0?
```

Returns 52 if bits 5 (MCCHG), 4 (MDCHG), and 2 (RNGCHG) are enabled (set to 1) in the Instrument Status 1 to 0 Change Enable register.

### ISCE1

Loads two bytes into the Instrument Status 0 to 1 Change Enable register described under "Checking Product Status."

#### Parameter

The decimal equivalent of the binary number to load into the register. You can also send a binary, octal, or hexadecimal number if you precede the

number with #b, #o, or #h, respectively. (A number without a preceding designator is taken as decimal.)

Example

```
ISCE1 52
```

Loads 00000000 00110100 (binary) into the register, enabling bits 5 (MCCHG), 4 (MDCHG), and 2 (RNGCHG).

## *ISCE1?*

Reads the contents of the Instrument Status 0 to 1 Change Enable register described under "Checking Product Status."

Parameter

None

Response

(Integer) The contents of the Instrument Status 0 to 1 Change Enable register in decimal.

Example

```
ISCE1?
```

Returns 52 if bits 5 (MCCHG), 4 (MDCHG), and 2 (RNGCHG) are enabled (set to 1) in the Instrument Status 0 to 1 Change Enable register.

## *ISCR0?*

Reads and clears the contents of the Instrument Status 1 to 0 Change Register described under "Checking Product Status."

Parameter

None

Response

(Integer) The contents of the Instrument Status 1 to 0 Change Register in decimal.

Example

```
ISCR0?
```

Returns 52 if bits 5 (MCCHG), 4 (MDCHG), and 2 (RNGCHG) have been set to 1 in the Instrument Status 1 to 0 Change register, and clears the register.

## *ISCR1?*

Reads and clears the contents of the Instrument Status 0 to 1 Change Register described under "Checking Product Status."

Parameter

None

Response

(Integer) The contents of the Instrument Status 0 to 1 Change Register in decimal.

Example

```
ISCR1?
```

Returns 52 if bits 5 (MCCHG), 4 (MDCHG), and 2 (RNGCHG) have been set to 1 in the Instrument Status 0 to 1 Change register, and clears the register.

### *ISR?*

Reads the contents of the Instrument Status Register described under "Checking Product Status."

Parameter

None

Response

(Integer) The contents of the Instrument Status Register in decimal.

Example

```
ISR?
```

Returns 32 if bit 5 (MCCHG is set to 1) in the Instrument Status register.

### *LOCAL (For serial/USB/Ethernet port remote control only)*

Puts the Product into the local state. This command duplicates the IEEE-488 GTL (Go To Local) message.

Parameter

None

### *LOCKOUT (For serial/USB/Ethernet port remote control only)*

Puts the Product into the local with lockout state. This command duplicates the IEEE-488 LLO (Local Lockout) message.

Parameter

None

### *MACADDR?*

Sequential command. Returns the MAC/HW address for LAN communication. The MAC address is a unique assigned value and cannot be changed.

Parameter

None

Response

String

Example

```
MACADDR?
```

Returns six groups of hexadecimal numbers separated by colons (for example, 01:23:45:67:89:ab)

### *MEAS?*

Triggers (or in continuous trigger, retriggers) a new measurement, waits for it to complete, then returns the value of the present input measurement (the most recently completed input measurement). If a timeout argument is given and no settled measurement occurs within the specified timeout period, the command generates an error and presents the closest approximation of the measurement obtained in the period. The MEAS? command is equivalent to the following sequence of commands: TRIG; *WAI; VAL?

#### Parameter

\<timeout in seconds\> (optional)

#### Response

1. (Float) The magnitude of the measurement in volts.
2. (Float) The frequency of the measurement in Hertz.
3. (Integer) A code describing the measurement as follows. If more than one condition is true, only the highest number is returned.

- 0 = Measurement conditions valid, no other condition below is true
- 1 = Frequency underrange
- 2 = Frequency overrange
- 3 = Measurement settled, but digital filter not full
- 4 = Measurement is unsettled ("U" annunciator is lit)
- 5 = Value is underrange ("Under Range" on display)
- 6 = Value is overrange ("Over Range" on display)
- 7 = Value is invalid ("--------" on display)

### *MODE?*

Returns the current operating mode. See the response below for modes.

#### Parameters

None

#### Response

(CRD) MEASUREMENT, CALIBRATION, DIAGNOSTIC, or CALWAITING

### *MODESTR?*

Returns a string that describes what a calibration or diagnostic procedure is doing.

#### Parameter

None

#### Response

(String) The same string that is shown on the display front panel operation, or an empty string if no calibration or diagnostic step is underway.

### MW?

Returns (50 Ω) milliwatt power equivalent of the reading. This is valid only for wideband.

#### Parameter

None

#### Response

1. (real) Amplitude
2. (String) Units

#### Example

```
MW?
1.2736105E+00,MW
```

### ONTIME?

Returns the time in minutes that the Product power has been turned on for the current operating session.

#### Parameters

None

#### Response

(Integer) The number of minutes.

### PKPK?

Returns the peak-to-peak power equivalent for the requested waveform (SINE, SQUARE, TRI, TRUNCS).

#### Parameter

SINE, SQUARE,TRI, or TRUNC

#### Response

1. (real) Amplitude
2. (String) Units

#### Example

```
PKPK? SQUARE
2.0000560E+00,V
```

### RANGE

Selects the range that best measures the specified value furnished as a parameter, or otherwise controls the range setting as defined by the parameter. The range selected will be the one within whose limits (as returned by the RANGE? command) the value falls. This command turns off autoranging if it was on, unless the parameter is AUTO.

#### Parameter

The value to be measured (the V or mV unit is optional).

or:

- LOCK (To lock the range)
- AUTO (To select autoranging)
- UP (To go to the next highest range)
- DOWN (To go to the next lowest range)

### *RANGE?*

Returns the present measurement range parameters.

Response

1. (Float) The nominal maximum value for the range (uprange point in auto range).
2. (Float) Minimum value measurable by range (not including low end hysteresis for autoranging).
3. (Float) Resolution of range
4. (Integer) 1 if autoranging, 0 if range locked.

### *REF?*

Returns the reference value and its associated parameters.

Parameter

None

Responses:

1. (Float) The reference value.
2. (Float) The frequency of the reference. (If references at two different frequencies were averaged, the second frequency is returned.)
3. (Integer) The number of readings used to generate the reference value. 0 = reference off, 1 = reference set, 2 = reference averaged.
4. (CRD) The input connector at which the last reference was measured, for example, INPUT1, or NONE if no reference is set.

### *REFAVG*

Sets the reference to the average of the present stored reference value and the present input measurement. This command generates an error if there is no reference set or if the reference has already been averaged.

Parameter

None

### *REFCLR*

Clears the reference.

Parameter

None

### *REFSET*

Sets the reference to the value of the present input measurement. This generates an error if a reference is already set. (Use REFCLR first in that case.)

Parameter

None

### REM_MODE

Sequential command. Sets the response type for a specified remote port.

Parameter

1. SERIAL, USB, ENET
2. COMP,TERM

Example

```
REM_MODE SERIAL, COMP
```

Sets the response type for serial communication to COMPUTER

```
REM_MODE ENET, TERM
```

Sets the response type for Ethernet communication to TERMINAL.

### REM_MODE?

Sequential command. Returns the response type for a specified remote port.

Parameter

1. SERIAL, USB, ENET

Response

(CRD)

Example

```
REM_MODE? SERIAL
```

Returns TERM if the serial response type has been set to TERMINAL mode

### REMOTE (For serial/USB/Ethernet port remote control only)

Puts the Product into the remote state. This command duplicates the IEEE-488 REN (Remote Enable) message.

Parameter

None

### RPTSTR

Sets the user report string. The user report string can be read on the display in local operation, and appears on calibration reports. Do not use control characters (for example, CRLF, ^D, etc.) in the string.

Parameter

String of up to 132 characters

### RPTSTR?

Returns the user report string. The user report string can be read on the display in local operation, and appears on calibration reports.

Parameter

None

Response

(String) Up to 132 characters

## SPLSTR

Sets the serial/USB/Ethernet remote mode Serial Poll response string.

### Parameters

The string (up to 40 characters) to print on receipt of a ^P (Control/P) character.

## SH

Load or create a shunt. If a shunt of that serial number is already stored, it is loaded and the value is not checked.

If no shunt of that number is stored, a generic shunt of the type is created with the given serial number.

If the instrument is not in the current shunt measurement window, the window will be enabled on the successful execution of this command.

### Parameter

1. Shunt Serial Number
2. Shunt Value

The following is a list of valid shunt values:

CUSTOM, SH1MA, SH10MA, SH20MA, SH50MA, SH100MA, SH200MA,

SH500MA, SH1A, SH2A, SH5A, SH10A, SH20A, SH50A, or SH100A

## SH?

Returns the data for a current shunt.

SH? Returns the data for the selected shunt.

SH? <sernum> Returns the data for a stored shunt with the given serial number.

### Parameter

Serial number of a stored shunt. (Optional - If omitted, shows the data for the currently selected shunt). A serial number of a stored shunt.

### Example

```
    SH?
val=100A; sernum=000000000 (MODIFIED); caldate=0; R(nom)=8.000e-03 ohms;
DCerr=0 ppm
8 AC/DC err pts:
+0 ppm @ 1.000000e+01 Hz
+0 ppm @ 5.500000e+01 Hz
+0 ppm @ 4.000000e+02 Hz
+0 ppm @ 1.000000e+03 Hz
+0 ppm @ 1.000000e+04 Hz
+0 ppm @ 3.000000e+04 Hz
+0 ppm @ 7.000000e+04 Hz
+0 ppm @ 1.000000e+05 Hz
5 loading err pts:
+0 ppm @ 0.000000e+00 Hz
+0 ppm @ 1.000000e+03 Hz
+0 ppm @ 1.000000e+04 Hz
+0 ppm @ 3.000000e+04 Hz
+0 ppm @ 1.000000e+05 Hz
```

### SH_AC?

Returns the AC/DC difference correction points for the currently selected shunt.

#### Parameter

None

#### Response (comma separated list)

1. (Integer) Number of data points
2. (Real) Frequency calibration point
3. (Integer) Error in ppm

,

.

.

.

#### Example

```
SH_AC?
8,1.00e+01,0,5.50e+01,0,4.00e+02,0,1.00e+03,0,1.00e+04,0,3.00e+04,0,7.00e+04,
0,1.00e+05,0
```

This indicates that there are 8 AC/DC difference correction points for the currently selected shunt and lists the frequencies and respective error in PPM for each point.

### SH_ACADD

Adds an AC/DC difference data point for the currently selected shunt. Parameters are frequency and error in ppm.

#### Parameter

1. (Real) Frequency
2. (Integer) Error in ppm

#### Example

```
SH_ACADD 10000.0, 5
```

### SH_ACCLR

Clears all of the AC/DC difference corrections for the currently selected shunt

#### Parameter

None

## SH_ACDEL

Deletes an AC/DC difference correction of the currently selected shunt.

### Parameter

1. (Integer) Numeric index of the AC/DC difference correction (where zero represents the first element in the table)

### Example

```
SH_ACDEL 3
```

Deletes the 4th value from the AC/DC difference correction table

## SH_ACMOD

Sets an AC/DC difference correction of the currently selected shunt to a new frequency and error.

### Parameter

1. (Integer) Numeric index of AC/DC difference correction (where zero represents the first element in the table)
2. (Real) Frequency
3. (Integer) Error in ppm

### Example

```
SH_ACMOD 1,7.0,2
```

Sets the 2nd value of the AC/DC difference correction table to 7.0 Hz and 2 ppm

## SH_ACSETALL

Sets all AC/DC difference corrections for the currently selected shunt at once.

The syntax is: SH_ACSETALL numpts, freq in Hz,error in ppm,...

### Parameter

1. (Integer) Number of data points
2. (Real) Frequency in Hz
3. (Integer) Error 1 in ppm
4. (Real) Frequency 2 in Hz
5. (Integer) Error 2 in ppm

…

### Example

```
SH_ACSETALL 3, 1.0e+3, -12, 5.5e+4, 8, 2.0e+5, -3
```

### *SH_CALDATE <i>*

Sets the calibration date for the currently selected shunt

Parameter

1. (Integer) Cal date for selected shunt as YYYYMMDD.

Example

```
SH_CALDATE 20150223
```

### *SH_CALDATE?*

Returns the calibration date for the currently selected shunt

Parameter

None

Example

```
SH_CALDATE?
20150223
```

### *SH_CLR*

Disables/exits current shunt measurement window.

Parameter

None

### *SH_DCERR*

Sets the DC ppm error for the currently selected shunt (if custom, set true resistance).

Parameter

1. (Real) DC ppm error

Example

```
SH_DCERR 1.1
```

### *SH_DCERR?*

Returns the DC ppm error for the selected shunt

Parameter

None

Example

```
SH_DCERR?
1.080000e+01
```

## SH_DELE

Clears the shunt data for a particular serial number.

The generic shunt for each class cannot be cleared (nor can serial number 0).

### Parameter

1. (Integer) Serial Number of shunt to delete

### Example

```
SH_DELE 000134445
```

Deletes the data for shunt serial number 000134445. Use the SH_LISTALL? command for a complete list of shunt values and their serial numbers.

## SH_LDGEN

Loads the generic shunt data for a value of shunt.

### Parameter

CUSTOM, SH1MA, SH10MA, SH20MA, SH50MA, SH100MA, SH200MA, SH500MA, SH1A, SH2A, SH5A, SH10A, SH20A, SH50A, or SH100A

### Example

```
SH_LDGEN SH20MA
```

Loads the generic shunt data for the 20MA current shunt

## SH_LIST?

Lists the serial numbers available for a value of shunt.

### Parameter

CUSTOM, SH1MA, SH10MA, SH20MA, SH50MA, SH100MA, SH200MA, SH500MA, SH1A, SH2A, SH5A, SH10A, SH20A, SH50A, or SH100A

### Response (comma separated list)

1. (Integer) Number of shunts for the selected value of shunt
2. (Integer) Serial number

.

.

.

### Example

```
SH_LIST? SH20MA
2,4562,1345  (lists 2 20 MA shunts with serial numbers 4562 and 1345)
```

### SH_LISTALL?

Lists all shunt serial numbers available.

#### Parameter

None

#### Example

```
SH_LISTALL?
456123,2A
4562,20MA
1345,20MA
```

Shows three shunts, a 2 A shunt and two 20 MA shunts and their respective serial numbers.

### SH_LE?

Returns the loading error correction points for the currently selected shunt.

#### Parameter

None

#### Response (comma separated list)

1. (Integer) Number of data points
2. (Real) Frequency calibration point
3. (Integer) Error in ppm

.

.

.

#### Example

```
SH_LE?
5,0.00e+00,0,1.00e+03,0,1.00e+04,0,3.00e+04,0,1.00e+05,0
```

### SH_LEADD

Adds a loading error correction for the currently selected shunt.

#### Parameter

1. (Real) Frequency calibration point
2. (Integer) Error in ppm

#### Example

```
SH_LEADD 2e3,4
```

Adds a 2.0 kHz data point for the currently selected shunt and sets the loading error to 4 ppm.

### *SH_LECLR*

Clears all of the loading error corrections for the currently selected shunt.

Parameter

None

### *SH_LEDEL*

Deletes a loading error correction for the currently selected shunt.

Parameter

1. (Integer) Numeric index of the loading error correction (where zero represents the first element in the table)

SH_LEDEL

SH_ACDEL 2

Deletes the 3rd value from the loading error correction table

### *SH_LEMOD*

Sets a loading error correction for the currently-selected shunt to a new frequency and error.

Parameter

1. (Integer) Numeric index of the loading error correction (where zero represents the first element in the table)
2. (Real) Frequency
3. (Integer) Error in ppm

Example

```
SH_LEMOD 2,2e4,5
```

Sets the 3rd value of the loading error correction table to 20.0 kHz and 5 ppm

### *SH_LESETALL (variable)*

Sets all the loading error corrections at once.

The syntax is: SH_LESETALL numpts, freq in Hz,error in ppm,...

Parameter

1. (Integer) Number of data points
2. (Real) Frequency 1 in Hz
3. (Integer) Error 1 in ppm

.

.

.

Example

```
SH_LESETALL 3, 1.0e+3, -12, 5.5e+4, 8, 2.0e+5, -3
```

## SH_LOAD

Loads the data from a particular serial number shunt. Zero is not allowed. If the instrument is not in the current shunt measurement window, the window will be enabled on the successful execution of this command.

### Parameter

1. (Integer) Serial number of shunt to load data from.

   Use the SH_LISTALL? command for a full list of shunt values and their serial numbers.

### Example

```
SH_LOAD 4562
```

Loads the shunt data for the shunt with serial number 4562 and makes it the currently selected shunt.

## SH_SAVE

Saves the shunt data.

### Parameters

None

You must use this command when you make any changes (serial number, loading error correction data, AC/DC difference correction data, etc), for the currently selected shunt.

### Example

```
SH_SAVE
```

## SH_SERNUM

Sets the serial number of the loaded shunt.

### Parameter

1. (Integer) Serial number of the current shunt that you wish to set.

### Example

```
SH_SERNUM 7777777
```

Sets the serial number of the currently selected shunt to 7777777. Use the SH_SAVE command to save the changes. This command does not change the serial number of loaded shunt but rather "clones" the currently loaded shunt data and saves it with a new serial number. Use the SH_DELE command to delete a shunt.

## *SH_SERNUM?*

Returns the serial number of the currently selected shunt.

### Parameters

None

### Example

```
SH_SERNUM?
456123
```

Returns the serial number of the currently selected shunt. Use the SH_LISTALL? command to see all of the available shunt values and their serial numbers.

## *SH_TYPE?*

Returns the type of the currently selected shunt.

### Parameters

None

### Example

```
SH_TYPE?
2A
```

The currently selected shunt is a 2A shunt.

## *SPLSTR?*

Returns the string programmed for serial/USB/Ethernet remote mode Serial Poll responses.

### Response

(String) The serial/USB/Ethernet remote mode Serial Poll string.

## *SP_SET*

Sets the serial port settings and saves them in nonvolatile memory.

### Parameters

One or more of the following, in any order:

1. 9600, 19200, 38400, 57600, or 115200 (Baud rate)
2. TERM or COMP (See note below)
3. XON, RTS, or NOSTALL (Stall method)
4. DBIT7 or DBIT8 (Number of data bits)
5. SBIT1 or SBIT2 (Number of stop bits)
6. PNONE, EVEN, ODD, or IGNORE (Parity)
7. CR, LF, or CRLF (End-Of-Line)

*Note*

*The "TERM" or "COMP" parameter sets the responses in serial remote control to be appropriate for interactive terminal use or operation under program control. Specifying "TERM" generates remote responses in plain English for a human operator using a terminal. Specifying "COMP" generates remote responses for computer program use. (This command has the same effect as setting Remote I/F to "TERMINAL" or "COMPUTER" in the RS-232-C Port Setup Menu.)*

### Defaults:

9600, TERM, XON, DBIT8, SBIT1, PNONE, CRLF

### Example

```
SP_SET 9600,COMP,XON,DBIT8,SBIT1,EVEN,CRLF
```

### *SP_SET?*

Returns the serial port settings contained in nonvolatile memory.

#### Response

1. (Integer) One of these baud rate values: 9600, 19200, 38400, 57600 or 115200
2. (CRD) TERM or COMP (Response type)
3. (CRD) XON, RTS, or NOSTALL (Stall method)
4. (CRD) DBIT7 or DBIT8 (Data bits)
5. (CRD) SBIT1 or SBIT2 (Stop bits)
6. (CRD) PNONE, EVEN, ODD, or IGNORE (Parity)
7. (CRD) CR, LF, or CRLF (End-Of-Line)

#### Example

```
SP_SET? 9600,TERM,XON,DBIT8,SBIT1,PNONE,CRLF
```

### *SRQSTR*

Sets the serial/USB/Ethernet remote mode SRQ (Service Request) response string (up to 40 characters).

#### Parameter

The serial/USB/Ethernet remote mode SRQ string.

#### Example

```
SRQSTR "\nSRQ\n"
```

*Note*

*"\n" denotes the NEWLINE character (hex 0A).*

### *SRQSTR?*

Returns the string programmed for serial/USB/Ethernet Mode SRQ responses.

#### Response

(String) The serial/USB/Ethernet remote mode SRQ string.

### *STATS*

Turns measurement statistics ON or OFF.

If STATS are already on, STATS ON restarts them.

#### Parameter

1. (Boolean) ON or 1 for on, OFF or 0 for off

#### Example

```
STATS OFF
```

Turns measurement statistics off

```
STATS ON
```

Turns measurement statistics on. If measurement statistics were already enabled, this command will restart the sampling. If measurement statistics were previously off, this will start sampling if the sample count (see STATS_COUNT) had previously been set.

### STATS_PAUSE

Pauses statistics collection under way. If not collecting statistics, this command is ignored.

#### Parameters

None

#### Example

```
STATS_PAUSE
```

### STATS_RESUME

Resumes statistics collection from a pause. If not paused, this command is ignored.

#### Parameters

None

#### Example

```
STATS_RESUME
```

### STATS_STOP

Stops collecting statistics, but does not clear them.

#### Parameters

None

#### Example

```
STATS_STOP
```

### STATS_COUNT

Sets the number of samples to be included in the statistics. Setting the sample count to zero results in "free run" or continuous statistics measurement.

#### Parameter

1. (Integer) Number of samples (number of samples is restricted to greater than or equal to zero but less than 1000)

#### Example

```
STATS_COUNT 555
```

Sets the sample size to 555

## STATS?

Returns the statistics.

### Parameters

None

### Response (comma separated list)

1. (String) Current state of stats measurement (OFF, RUN, DONE, or PAUSE)
2. (Integer) Number of samples taken
3. (Real) Minimum value measured
4. (Real) Average/mean value measured
5. (Real) Maximum value measured
6. (Real) Standard deviation of samples
7. (String) Unit for standard deviation calculation (V, PPM, or COUNT). See STATUNIT for more information.
8. (Integer) Sample window size. See STATS_COUNT for more information.

### Example

```
STATS?
DONE,20,0.0931817,0.0931919,0.0932436,0.00001772,V,20
```

If the one of the measurement is over range (for example, exceeding the range lock boundary), the response will be:

```
INVALID,0,0.0,0.0,0.0,0.0,V,20
```

When STATUNIT is set to COUNT, the standard deviation is the number of counts of the least significant digit in the measurement.

## STATUNIT

Sets the unit for sigma in statistics

### Parameter

V, PPM, or COUNTS

### Example

```
STATUNIT PPM
```

Sets the standard deviation unit to ppm.

## STATUNIT?

Returns the unit for sigma and span in statistics

### Parameter

None

### Example

```
STATUNIT?
V
```

The unit for standard deviation calculation is Volts (V)

### SUBNETMASK

Sequential command. Sets the Ethernet subnet mask for LAN communication when NOT in DHCP mode.

#### Parameter

Subnet mask (quoted string consisting of 4 decimal values bound between 0-255 separated by periods).

#### Example

```
SUBNETMASK "255.255.254.0"
```

Sets the Ethernet subnet mask to 255.255.254.0

### SUBNETMASK?

Sequential command. Returns the Ethernet subnet mask for LAN communication.

#### Parameter

None

#### Response

String

#### Example

```
SUBNETMASK?
```

Returns 255.255.254.0 if the subnet mask was previously set to this value.

### TRIG

Triggers a measurement. When the Product is in manual trigger mode, a measurement begins when you send the TRIG, *TRG, or MEAS? command. Use the EXTRIG? query to determine the trigger mode setting.

#### Parameter

None

### UNCERT?

Returns the uncertainty in ppm of the instrument for the present measurement value and the present calibration interval setting. This returns 0 if there is no specification for the present measurement.

#### Parameter

None

#### Response

1. (Float) The uncertainty in ppm
2. (CRD) PPM
3. (Integer) 90, 365, or 720, depending on the CAL_INTV setting

#### Example

```
UNCERT? 33.1,PPM,365
```

### VAL?

Returns the value of the most recently completed input measurement.

Parameters

None

Response

The same response as the MEAS? query.

## Local-to-Remote State Transitions

The Product can be operated either locally from the front panel, or remotely with remote control commands. In addition to front panel and remote control operation, the controller can be placed in a local lockout condition at any time by remote command. When combined, the local, remote, and lockout conditions yield four possible operating states:

- Local (Front-Panel Operation)

  The Product responds to local and remote commands. This is normal front panel operation. All remote commands are allowed to execute.

- Local with Lockout

  Local with lockout is identical to local, except the Product will go into the remote with lockout state instead of the remote state when it receives a remote command. The local with lockout state is entered by executing the LOCKOUT statement from an IEEE-488 controller, or by sending the LOCKOUT command from a serial controller.

- Remote

  When the Remote Enable (REN) line is asserted and the controller addresses the Product as a listener, it enters the remote state. These conditions are met, for example, when a GPIB controller executes any statement to the Product.

  Front panel operation is restricted to use of the power switch and the Local Control selection. Touch Local Control or send the GTL (Go To Local) interface message to return the Product to the local state. (One way to send the GTL interface message in some controllers is by executing the LOCAL statement.)

- Remote with Lockout

  The Product can enter the remote with lockout state from remote or local with lockout, but not directly from local. Remote with lockout is similar to the remote state, but restricted: the Local Control is not shown on the display. To return the Product to the local with lockout state, the GPIB controller sends GTL. (With some IEEE-488 controllers, you can be do this manually by executing a WBYTE statement.) To return the Product to the local state, the GPIB controller unasserts the REN control line.

  Table 6-7 summarizes the possible Remote/Local state transitions.

**Table 6-7. Operating State Transitions**

| From | To | Use | Typical GPIB Command |
|---|---|---|---|
| Local | Remote | MAL + REN | REMOTE |
| | Local/Lockout | LLO + REN | LOCKOUT |
| Remote | Local | GTL or LOCAL CONTROL selection | LOCAL |
| | Remote/Lockout | LLO + REN | LOCKOUT |
| Local/Lockout | Remote/Lockout | MLA + REN | REMOTE or any Calibrator command |
| Remote/Lockout | Local | REN not | LOCAL |
| | Remote/Lockout | GTL | Manually using WBYTE |

## Checking Product Status

The Product provides access to status registers, enable registers, and queues in the Product that indicate various conditions in the instrument as shown in Figure 6-1. Some registers and queues are defined by the IEEE-488.2 standard. The rest are specific to the Product. In addition to the status registers, the Service Request control line, SRQ, and a 16-element buffer called the Error Queue provide status information. Table 6-8 lists the status registers and gives the read/write commands and mask registers associated with each.

Each status register and queue has a summary bit in the Status Byte Register. Enable registers are used to mask various bits in the status registers and generate summary bits in the Status Byte Register. The Service Request Enable Register can be used to assert the IEEE-488 Service Request (SRQ) control line on detection of any status condition or conditions the programmer chooses.

**Table 6-8. Status Register Summary**

| Register | Read Command | Write Command | Enable Register |
|---|---|---|---|
| Status Byte Register | (STB) *STB? (or SPL) for some controllers | None | SRE |
| Service Request Enable Register (SRE) | *SRE? | *SRE | None |
| Event Status Register (ESR) | *ESR? | None | ESE |
| Event Status Enable Register (ESE) | *ESE? | *ESE | None |
| Instrument Status Register (ISR) | ISR? | None | None |
| Instrument Status 0-1 Change Register (ISCR1) | ISCR1? | None | ISCE1 |
| Instrument Status 0-1 Change Enable Register (ISCE1) | ISCE1? | ISCE1 | None |
| Instrument Status 1-0 Change Register (ISCR0) | ISCR0? | None | ISCE0 |
| Instrument Status 1-0 Change Enable Register (ISCE0) | ISCE0? | ISCE0 | None |

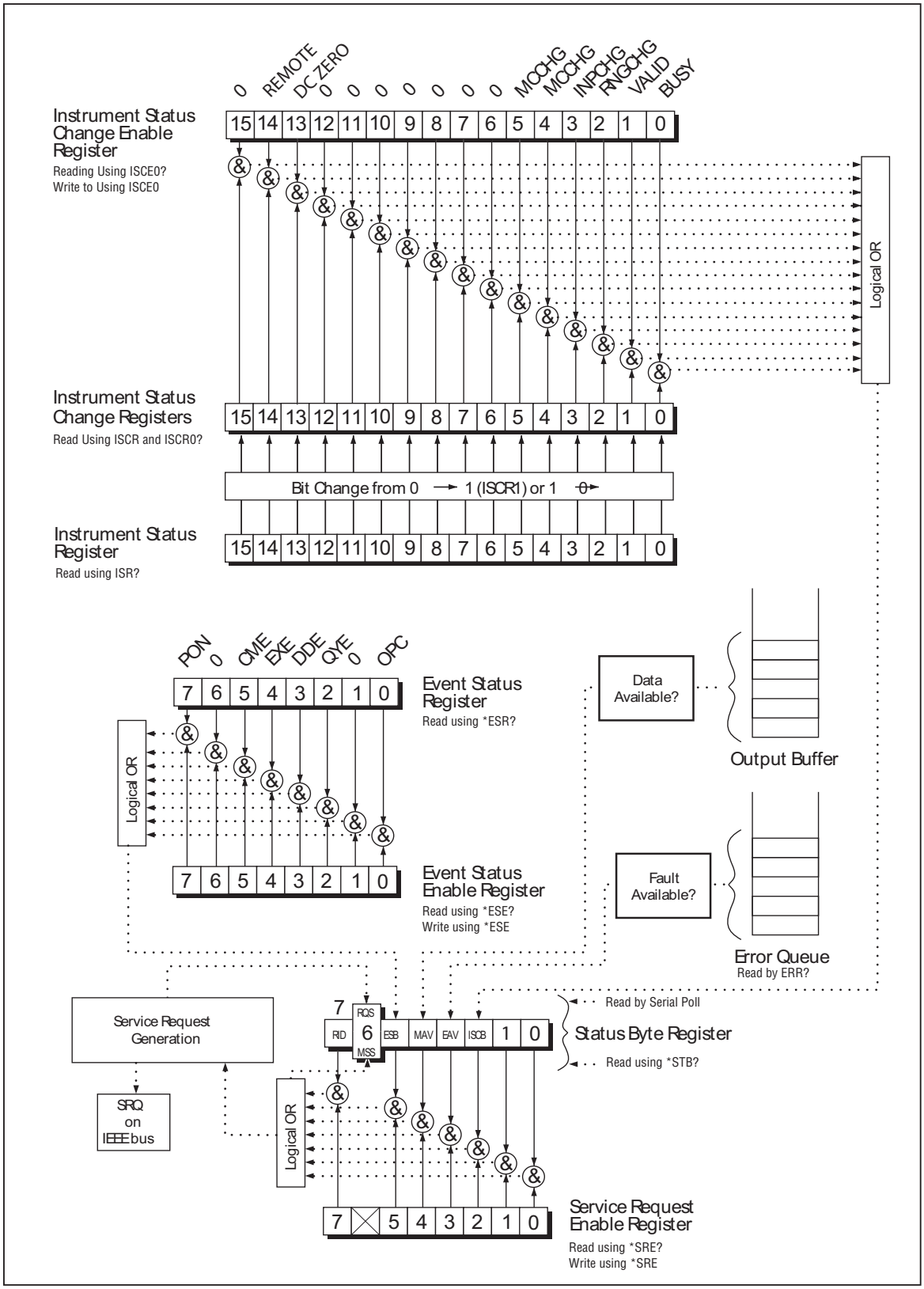


**Figure 6-1. Status Register Overview**

## *Status Byte Register (STB)*

The most important and frequently used register is the Status Byte Register (STB), which the Product sends when it responds to a serial poll. This byte is cleared (set to 0) when the power is turned on. Its bits are defined as follows (bits 1 and 0 are always 0). See Table 6-9.

**Table 6-9. Status Byte and SRE Bit Definitions**

| 7 | 6 | 5 | 4 | 3 | 2 | 1 | 0 |
|---|---|---|---|---|---|---|---|
| RID | RQS<br>MSS | ESB | MAV | EAV | ISCB | 0 | 0 |

| | |
|---|---|
| RID | Remote Idle. Set to 1 when the remote interface waits for input. |
| RQS | Requesting Service. The RQS bit is set to 1 when bits ESB, MAV, EAV, or ISCB change from 0 to 1 and are enabled (1) in the SRE. When RQS is 1, the Product asserts the SRQ control line on the IEEE-488 interface. You can do a serial poll to read this bit to see if the Product is the source of an SRQ. |
| MSS | Master summary status. Set to 1 whenever bits ESB, MAV, EAV, or ISCB are 1 and enabled (1) in the SRE. This bit can be read using the *STB? command in serial/USB/Ethernet remote control in place of doing a serial port. |
| ESB | Set to 1 when one or more enabled ESR bits are 1. |
| MAV | Message available. The MAV bit is set to 1 when data is available in the Product IEEE-488 interface output buffer. |
| EAV | Error available. An error has occurred and an error is available to be read from the error queue by using the ERR? query. |
| ISCB | One or more enabled ISCR bits are 1. |

If you are using the RS-232C, USB or Ethernet port as the remote control interface, transmitting the ^P character returns the SPLSTR and the status byte. Also refer to the *STB? command for more information.

### *Service Request Line (SRQ)*

Service Request (SRQ) is an IEEE-488.1 bus control line the Product asserts to notify the controller that it requires some type of service. Many instruments can be on the bus, but they all share a single SRQ line. To determine which instrument set SRQ, the Controller normally does a serial poll of each instrument. The Product asserts SRQ whenever the RQS bit in its Status Byte Register is 1. This bit informs the controller that the Product was the source of the SRQ.

The Product clears SRQ and RQS whenever the controller performs a serial poll of the Product IEEE-488 interface or sends *CLS, or whenever the MSS bit is cleared. The MSS bit is cleared only when RID, ESB, MAV, EAV, and ISCB are 0, or they are disabled by their associated enable bits in the SRE register being set to 0.

### *Service Request Enable Register (SRE)*

The Service Request Enable Register (SRE) enables or masks the bits of the Status Byte Register. The SRE is cleared at power up. Refer to "Status Byte Register" for the bit functions.

### *Programming the SRE*

By setting (to 0) the bits in the SRE, you can mask (disable) associated bits in the Status Byte Register. Bits set to 1 enable the associated bit in the Status Byte Register.

## ***Event Status Register (ESR)***

The Event Status Register is a two-byte register in which the higher eight bits are always 0, and the lower eight bits except bits 6 and 1 represent various conditions of the Product. The ESR is cleared (set to 0) every time it is read. The ESR register is set to 128 at power on.

### *Event Status Enable Register (ESE)*

A mask register called the Event Status Enable register (ESE) allows the controller to enable or mask (disable) each bit in the ESR. When a bit in the ESE is 1, the corresponding bit in the ESR is enabled. When any enabled bit in the ESR is 1, the ESB bit in the Status Byte Register also goes to 1. The ESB bit stays 1 until the controller reads the ESR or sends the *CLS command to the Product. The ESE is cleared (set to 0) when the power is turned on.

### *Bit Assignments for the ESR and ESE*

See Table 6-10 for bit assignments for the ESR and ESE.

**Table 6-10. Bit Assignments for ESR and ESE**

| 15 | 14 | 13 | 12 | 11 | 10 | 9 | 8 |
|---|---|---|---|---|---|---|---|
| 0 | 0 | 0 | 0 | 0 | 0 | 0 | 0 |
| | | | | | | | |
| 7 | 6 | 5 | 4 | 3 | 2 | 1 | 0 |
| PON | 0 | CME | EXE | DDE | QYE | 0 | OPC |

| | |
|---|---|
| PON | Power on. This bit is set to 1 if line power has been turned off and on since the last time the ESR was read. |
| CME | Command error. The Product remote interface encountered and incorrectly formed command. (The command ERR? fetches the earliest error code in the error queue, which contains error codes for the first 15 errors that have occurred). |
| EXE | Execution error. An error occurred while the Product tried to execute the last command. This could be caused, for example, by a parameter being out of range. (The command ERR? fetches the earliest error code in the error queue, which contains error codes for the first 15 errors that have occurred). |
| DDE | Device-dependent error. An error related to a device-dependent command has occurred. |
| QYE | Query error. The Product was addressed to talk when no response data was available or appropriate, or when the controller failed to retrieve data on the output queue. |
| OPC | Operation complete. All commands previous to reception of a *OPC command have been executed, and the interface is ready to accept another message. |

### *Read the ESR and ESE*

To read the contents of the ESR, send the remote command, "*ESR?." The ESR is cleared (set to 0) every time it is read. To read the contents of the ESE, send the remote command, "*ESE?." The ESE is not cleared when it is read. When either register is read, the Product responds by sending a decimal number that represents bits 0 through 15.

### *Load the ESE*

Resetting the bits in the ESE can mask (disable) the associated bits in the ESR. For example, to prevent the occurrence of a command error from causing bit 5 (ESB) in the Status Byte Register going to 1, bit 5 in the ESE register can be reset to 0.

## ***Instrument Status Register (ISR)***

The Instrument Status Register (ISR) gives the controller access to the state of the Product, including some of the information presented to the operator on the display and the display annunciators during local operation.

### *Instrument Status Change Registers*

There are two registers dedicated to monitoring changes in the ISR. These are the ISCR0 (Instrument Status 1-0 Change Register) and the ISCR1 (Instrument Status 0-1 Change Register). Each status change register has an associated mask register. Each ISCR is cleared (set to 0) when the Product is turned on, every time it is read, and at each *CLS (Clear Status) command.

### *Instrument Status Change Enable Registers*

The Instrument Status Change Enable registers (ISCE0 and ISCE1) are mask registers for the ISCR0 and ISCR1 registers. If a bit in the ISCE is enabled (set to 1) and the corresponding bit in the ISCR makes the appropriate transition, the ISCB bit in the Status Byte is set to 1. If all bits in the ISCE are disabled (set to 0), the ISCB bit in the Status Byte never goes to 1. The contents of the ISCE registers are set to 0 at power-up.

### *Bit Assignments for the ISR, ISCR, and ISCE*

See Table 6-11 for the ISR, ISCR, and ISCE bit assignments.

**Table 6-11. Bit Assignments for the ISR, ISCEs and ISCRs**

| 15 | 14 | 13 | 12 | 11 | 10 | 9 | 8 |
|---|---|---|---|---|---|---|---|
| 0 | REMOTE | ZERO CAL | 0 | 0 | 0 | 0 | 0 |
| | | | | | | | |
| 7 | 6 | 5 | 4 | 3 | 2 | 1 | 0 |
| 0 | 0 | MCCHG | MDCHG | INPCHG | RNGCHG | VALID | BUSY |

| | |
|---|---|
| REMOTE | Set to 1 when the product is under remote control. |
| ZERO CAL | When 1, DC Zero Cal is necessary. |
| MCCHG | Set to 1 when measurement controls have changed. (Measurement controls are EXTGUARD, EXTRIG, DFILT, AUTORANGE, HIRES.) |
| MDCHG | Set to 1 when an operating mode has changed. (Modes are MEASUREMENT, CALIBRATION, DIAGNOSTIC, and CALWAITING.) This bit is always 0 in the ISR. It changes to 1 only in the ISCR0 and ISCR1 registers. |
| INPCHG | Set to 1 when the input source has changed. This bit is always 0 in the ISR. It changes to 1 only in the ISCR0 and ISCR1 registers. |
| RNGCHG | Set to 1 when the range has changed. This bit is always 0 in the ISR. It changes to 1 only in the ISCR0 and ISCR1 registers. |
| VALID | Set to 1 when the present measurement is valid. |
| BUSY | Set to 1 when the Product is making a measurement, running a calibration or diagnostics procedure, or saving anything to nonvolatile memory. |

### *Read the ISR, ISCR, or ISCE*

To read the contents of the ISR, send the remote command, "ISR?." To read the contents of the ISCR0 or 1, send the remote command, "ISCR0?", or "ISCR1?". To read the contents of the ISCE0 or 1, send the remote command, "ISCE0?", or "ISCE1?". The Product responds by sending a decimal number that represents bits 0 through 15. Each time you read the ISCR0 or 1, its contents are zeroed.

By setting the bits in an ISCE register, the associated bits in the ISCR can be masked (disabled). For example, to cause an SRQ interrupt when the input frequency goes over range, bit 10 (MDCHG) in the ISCE1 register must be 1. (The ISCB bit must also be enabled in the SRE.)

## *Output Queue*

The output queue is loaded whenever a query is processed, and holds up to 128 characters. If the queue is empty, the Product does not respond to the query statement from the controller. The Message Available (MAV) bit in the Status Byte Register is 1 if there is something in the output queue and 0 if the output queue is empty.

## *Error Queue*

When a command error, execution error, or device-dependent error occurs, its error code is placed in the error queue where it can be read by the ERR? command. All error codes are defined in Appendix A of this manual. Another way to decode a error code is to send the command, EXPLAIN?, which returns a description of a error code. Reading the first error with the ERR? Command removes that error from the queue. A response of "0" means the error queue is empty. The Error Available (EAV) bit in the Status Byte Register indicates whether the queue is empty. The error queue is cleared when you turn off the power, and when you use the *CLS (Clear Status) common command.

The error queue contains up to 16 entries. If many errors occur, only the first 15 errors are kept in the queue. A 16th entry in the queue is always an "error queue overflow" error, and all later errors are discarded until the queue is at least partially read. The first errors are kept, because if many errors occur before the user can acknowledge and read them, the earliest errors are the most likely to point to the problem. The later errors are usually repetitions or consequences of the original problem.

# Chapter 7
# Operator Maintenance

## Introduction

This chapter explains how to perform the routine maintenance and calibration tasks required to keep a normally operating 5790B AC Measurement Standard in optimal operating condition. These tasks include:

- Replacing the fuse
- Cleaning the air filter
- Cleaning the external surfaces
- Calibration

Refer to the *5790B Service Manual* complete verification procedures for checking that traceability to national standards is being maintained by the normal calibration procedure. For intensive maintenance tasks such as troubleshooting or repair, contact a Fluke Calibration Service Center. See *How to Contact Fluke Calibration*.

## Fuse Replacement

**⚠⚠ Warning**

**To prevent possible electrical shock, fire, or personal injury:**

- **Turn the Product off and remove the mains power cord. Stop for two minutes to let the power assemblies discharge before you open the fuse door.**
- **Replace a blown fuse with exact replacement only for continued protection against arc flash.**
- **Use only specified replacement fuses, see Table 7-1.**

Access the fuse from the rear panel. The fuse rating label below the fuse holder shows the correct replacement fuse. Note that the same fuse is used for all line voltages. To access the fuse, refer to Figure 7-1:

1. Disconnect the mains power cord.
2. With a standard screwdriver, release the fuse holder door.
3. Pull out the fuse holder.
4. If necessary, replace the fuse.
5. Reinsert the fuse holder.
6. Close the fuse holder door.

**Table 7-1. Replacement Fuses**

| Line Voltage Range | Fuse Description | Fluke Part Number |
|---|---|---|
| ⚠100 V – 120 V | T 1.5 A 250 V(SB) | 109231 |
| ⚠220 V – 240 V (SB) | T 1.5 A 250 V(SB) | 109231 |

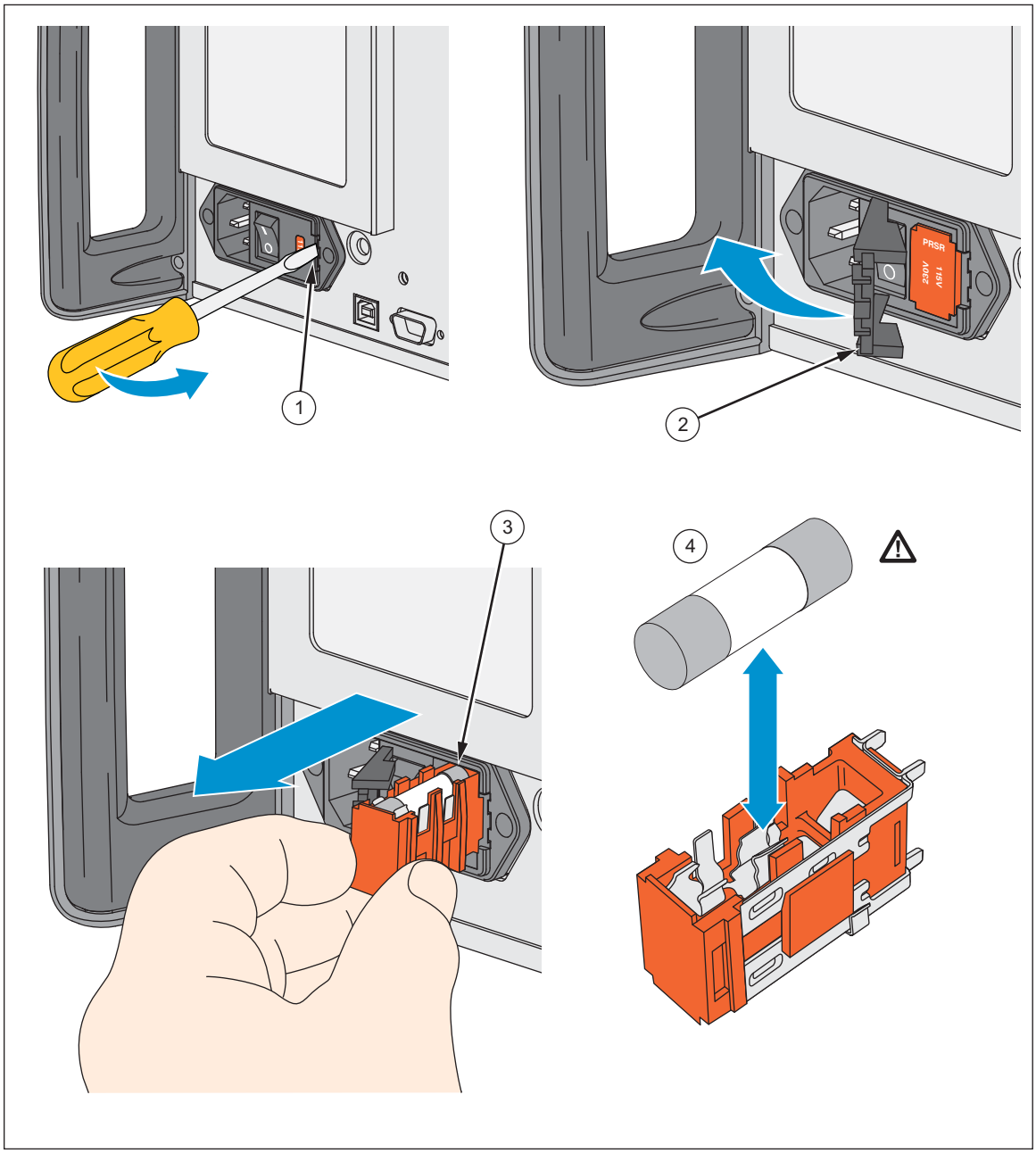


add58f.eps

**Figure 7-1. Accessing the Fuse**

## Clean the Air Filter

**⚠ Caution**

**Damage caused by overheating can occur if the area around the fan is restricted, the intake air is too warm, or the air filter becomes clogged. To prevent Product damage, make sure that the filter is completely dry before reinstallation.**

The air filter must be removed and cleaned every 30 days, or more frequently if the Product is operated in a dusty environment. The air filter is accessible from the rear panel.

To clean the air filter, refer to Figure 7-2 and proceed as follows:

1. Disconnect mains power.
2. Remove the filter element.
   a. Use a tool to loosen the screw at the top of the air filter (counterclockwise).
   b. Pull the air filter retainer downward; it hinges at the bottom.
   c. Remove the filter element.
3. Clean the filter element.
   a. Wash the filter element in soapy water.
   b. Rinse the filter element in fresh running water.
   c. Shake out the excess water and allow the filter element to dry thoroughly before it is reinstalled.

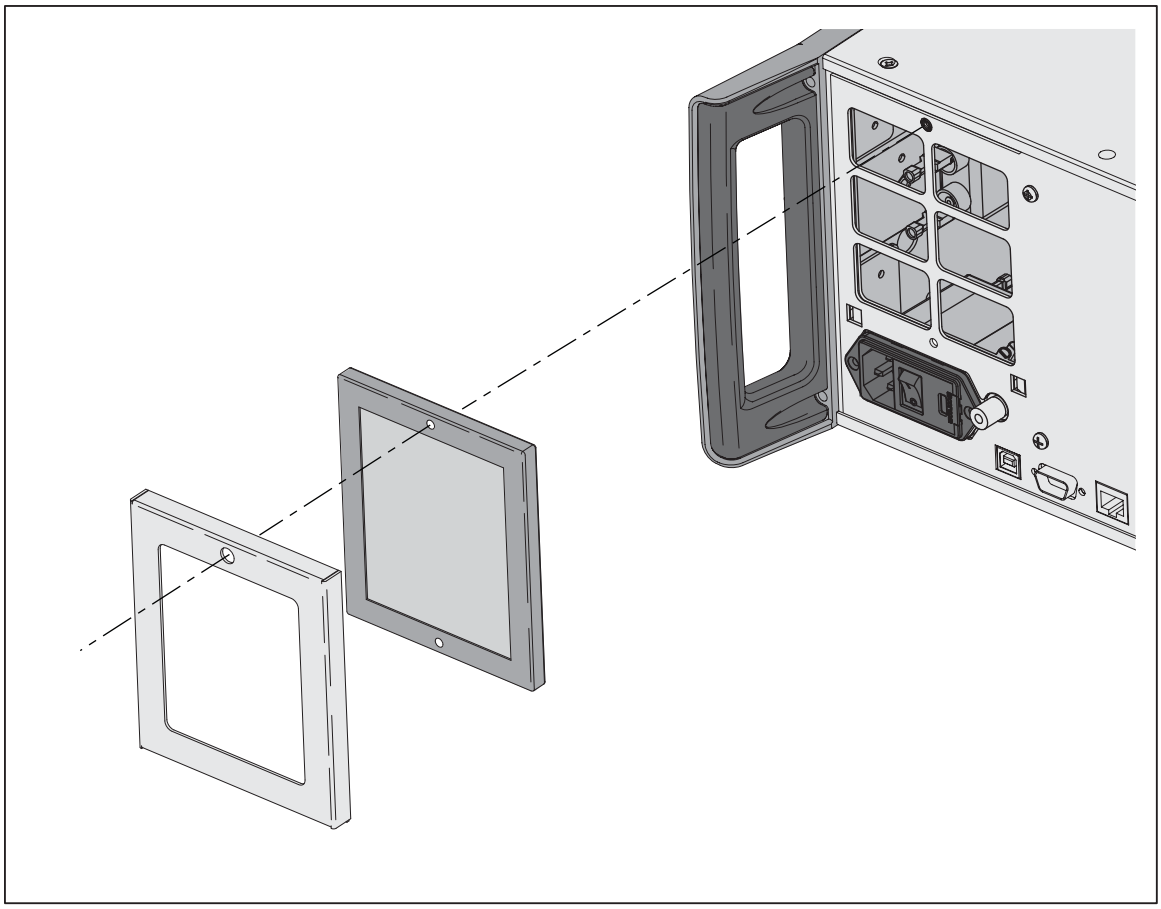

hvi026.eps

**Figure 7-2. Accessing the Air Filter**

## General Cleaning

To keep the Product looking like new, clean the case, front panel keys, and display using a soft cloth slightly dampened with water or a non-abrasive mild cleaning solution that does not harm plastics.

**⚠Caution**

**Do not use aromatic hydrocarbons or chlorinated solvents for cleaning. They can damage the plastic materials used in the Product.**

## User-Replaceable Parts

User-replaceable parts are listed in Table 7-2. For more information about these items contact a Fluke Calibration representative. See the *Contact Fluke Calibration* section of this manual.

**Table 7-2. User-Replaceable Parts**

| Description | Fluke Calibration Part Number |
|---|---|
| 5790B Model Decal | 4411011 |
| 5790B Input Decal | 4411009 |
| Usb Decal | 4219557 |
| Side Extrusion | 4222803 |
| Insert Extrusion | 4233853 |
| Screw Handle | 295105 |
| Top Cover | 4104376 |
| Bottom Cover | 4104383 |
| Screw Top & Bottom Cover | 320093 |
| Bottom Foot | 868786 |
| Filter Frame | 4604458 |
| ⚠ Fuse 1.5 A 250 V(SB) | 109231 |
| Handles | 3468705 |
| Manuals CD | 4557933 |
| Filter | 813493 |
| LC1 North American | 284174 |
| LC3 Europe | 769422 |
| LC4 UK | 769455 |
| LC5 Swiss | 769448 |
| LC6 Australia | 658641 |
| LC7 South Africa | 782771 |
| LC42 Brazil | 3841347 |
| LC63 Denmark 10 A Detachable | 2477031 |
| LC78 THAILAND,10 A,250V,TIS 166 TO C13 | 4362094 |

# Calibration

When shipped, the Product is calibrated at the factory, traceable to the SI. To maintain traceability, calibrate the Product to traceable external standards using proper procedures, as often as required by your choice of calibration cycle: 90 day, 1 year, or 2 years.

## Calibration Reports

Calibration Reports show the shifts at various input levels and frequencies that are the result of the most recent, or the previous calibration. The report can be saved to a USB drive or retrieved from a host computer through the RS-232, USB device port, Ethernet port, or IEEE-488 interface.

*Note*

*The calibration reports are test reports, not calculations of correction factors to be applied. Do not use the shifts printed on the reports as correction factors.*

## Save Calibration Reports

Calibration reports can be created and exported to a USB flash drive using remote commands. The subsequent sections describe the reports.

To save a calibration report:

1. Put a flash drive into the front USB port.
2. Execute the "CAL_USB" command. Refer to the *Remote Commands* section for more information including associated arguments and usage.

Once the command is executed, the report starts downloads to the USB drive. It can take up to 2 minutes to complete. Use the *OPC or *OPC? remote command to determine when the download has completed. The report is in comma separated value (CSV) format and can be imported into a spreadsheet program such as Microsoft Excel.

3. Open or print the file from the PC.

# *Appendix A*
# *Error Codes*

| 0-Level Faults: Error handling | |
|---|---|
| 0 | No Error |
| 1 | Error Queue Overflow |
| 2 | Bad ERR Channel |

| 100-Level Faults: Self-calibration | |
|---|---|
| 100 | Invalid Procedure Number |
| 101 | No Such Step In Procedure |
| 102 | No Cal/Diag Procedure Underway |
| 103 | Cal/Diag not Halted |
| 104 | No Cal Step To Which To Back Up |
| 105 | No Such Position For Range Under Cal |
| 106 | No Such Range For Cal Procedure |
| 107 | DAC %s Calibration Failed |
| 108 | Entered Reference Outside Of Limits |
| 109 | Measured And Entered Input Don't Match |
| 110 | Frequency Doesn't Match Expected |
| 111 | Input Is Of Wrong Polarity |
| 112 | Input Is Changing During Cal |
| 113 | Input Tripped Protection Circuit |
| 114 | Constant %s Out Of Limits |
| 115 | Flatness Constant Out Of Limits |
| 116 | Range Gain Constant Out Of Limits |
| 117 | Rough Gain Constant Out Of Limits |

| | |
|---|---|
| 118 | Offset Constant Out Of Limits |
| 119 | Low F AC Constant Out Of Limits |
| 120 | %s Range Zero Out Of Limits |
| 121 | %s Range Shunt Offset Out Of Limits |
| 122 | Divide By 0 %s IA Update |
| 123 | Old %s IA Is Way Off! Do A DC Cal |
| 124 | Temperature Gain Is Zero! |
| 125 | New Temperature Zero Out Of Limits |
| 126 | Cal State Must Be Unsecured and in Service Mode |
| 127 | INPUT2 Correction Factor Out Of Limits |
| 128 | Calibration Step In Progress |
| 129 | Must Do Wideband Reference Correction First |
| 130 | Cable Calibration Failed |
| 150 | Calibration Procedure Complete |
| 199 | Cal Error Occurred; Already Reported |

| **200-Level Faults: Hardware configuration** | |
|---|---|
| 200 | Need A %s To Do That |
| 201 | Need Wideband AC Option To Do That |
| 202 | IG Software Out Of Date: Use %s Or Newer |

| **300-Level Faults: Inguard processor** | |
|---|---|
| 300 | A17 Guardcrossing: ROM Checksum |
| 301 | A17 Guardcrossing: RAM |
| 302 | A17 Guardcrossing: DUART |
| 303 | A17 Guardcrossing: Watchdog |
| 304 | Hardware Initialization |

| **400-Level Faults: Self-diagnostics** | |
|---|---|
| 400 | %s |
| 401 | A16 DAC: Channel Ratio |
| 402 | %s |
| 403 | A15 A/D: Selftest |
| 404 | A15 A/D: %s Zero |
| 405 | A15 A/D: Null DAC %s |

| | |
|---|---|
| 406 | A15 A/D: DAC %s |
| 407 | A15 A/D: Chopper %s |
| 408 | A10 Transfer: %s Range |
| 409 | A10 Transfer: %s Protection Check |
| 410 | A10 Transfer: Overload Check |
| 411 | A10 Transfer: Sensor Input/Output Match |
| 412 | A10 Transfer: %s Range Zero |
| 413 | A10 Transfer: %s Input Path |
| 414 | A10 Transfer: %s Frequency Measurement |
| 415 | A6 Wideband: %s Range |
| 416 | A6 Wideband: Overload Check |
| 417 | A6 Wideband: %s Frequency Measurement |
| 418 | A3 Motherboard: KV Divider %s |
| 419 | A10 Transfer: Sensor Loop Settling |
| 420 | A6 Wideband: Sensor Loop Settling |
| 421 | A16 DAC: DAC Settling |
| 422 | A6 Wideband: Dormant Protection Check |
| 423 | A15 A/D: %s Linearity |
| 450 | Diagnostics Procedure Complete |

| **500-Level Faults: Instrument state** | |
|---|---|
| 500 | Bad Delta Unit |
| 501 | Invalid Range |
| 503 | Can't Set Ref |
| 504 | Can't Set Avg Ref |
| 505 | Can't Decode Learned String |
| 506 | Learned String Checksum Bad |
| 507 | Recalling Unsaved Instrument State |
| 508 | Already Printing A Report |
| 509 | External Guard Not Available |
| 510 | Display Brightness Setting Exceeds Limits |

| **600-Level Faults: Firmware updater** | |
|---|---|
| 601 | Backup directory not specified in AuxInfo |
| 602 | Backup filename not specified in AuxInfo |

| | |
|---|---|
| 603 | Destination directory not specified in AuxInfo |
| 604 | Destination filename not specified in AuxInfo |
| 605 | Error extracting required file transfer data from AuxInfo |
| 606 | Error retrieving parameter value from AuxInfo |
| 607 | Error retrieving section name from AuxInfo |
| 608 | Interim directory not specified in AuxInfo |
| 609 | Interim filename not specified in AuxInfo |
| 610 | Error reading AuxInfo file |
| 611 | Source directory on USB device not specified in AuxInfo |
| 612 | Source filename on USB device not specified in AuxInfo |
| 613 | Can not build a list of sequences to be executed |
| 614 | Backup directory not specified in AuxInfo (config/cal) |
| 615 | Backup file not specified in AuxInfo (config/cal) |
| 616 | Destination directory not specified in AuxInfo (config/cal) |
| 617 | Destination file not specified in AuxInfo (config/cal) |
| 618 | Source directory not specified in AuxInfo (config/cal) |
| 619 | Source file not specified in AuxInfo(config/cal) |
| 620 | Error setting mode of new file |
| 621 | Timestamp too long in AuxInfo |
| 622 | Can not close updated file (config/cal) |
| 623 | Destination file does not exist (config/cal) |
| 624 | Can not get required AuxInfo parameters (config/cal) |
| 625 | Can not open new file (config/cal) |
| 626 | Failed to read the existing (destination) file (config/cal) |
| 627 | Failed to read the new (source) file (config/cal) |
| 628 | Can not remove existing backup file (config/cal) |
| 629 | Can not rename existing file to backup file (config/cal) |
| 630 | Source file does not exist (config/cal) |
| 631 | Invalid timestamp.  Can not convert to epoch time |
| 632 | Kernel Datapath1 not specified in AuxInfo |
| 633 | Kernel Datapath2 not specified in AuxInfo |
| 634 | Kernel Device not specified in AuxInfo |
| 635 | Kernel Erase Command not specified in AuxInfo |
| 636 | Can not extract Kernel update data from AuxInfo |
| 637 | Kernel Offset not specified in AuxInfo |

| | |
|---|---|
| 638 | Kernel Read Command not specified in AuxInfo |
| 639 | Kernel Write Command not specified in AuxInfo |
| 640 | Kernel Device failed to close |
| 641 | Kernel Device failed to return info about device status |
| 642 | Kernel Device failed to open |
| 643 | Kernel Device failed to return status (error not used) |
| 644 | Unable to determine the size of the Kernel image file |
| 645 | Invalid offset in Kernel image section |
| 646 | Unable to extract command1 from AuxInfo for FrontPanel_Part3 |
| 647 | Unable to extract command2 from AuxInfo for FrontPanel_Part3 |
| 648 | Error creating interim directory |
| 649 | MD5 hash of downloaded file does not agree with AuxInfo |
| 650 | Error mounting USB device |
| 651 | File to be downloaded does not exist on USB device |
| 652 | USB device not plugged in |
| 653 | Error deleting previous backup file |
| 654 | Error renaming installed file to backup |
| 655 | Error moving download file to destination directory |
| 656 | Remove file operation not specified in AuxInfo |
| 657 | Remove file operation failed |
| 658 | Error copying file from USB device to interim directory |
| 659 | File on USB device is older than installed file |
| 660 | File on USB device same as installed file (per timestamp) |
| 661 | Error unmounting USB device |
| 662 | Can not extract ver # from line 1 of src file (config/cal) |
| 663 | Can not extract ver # from line 1 of dest file (config/cal) |
| 664 | Kernel Datapath1 MD5 hash failed |
| 665 | Kernel Datapath2 (readback) MD5 hash failed |
| 666 | Unable to extract command JTAG from AuxInfo for MSP |
| 667 | Unable to unlock JTAG on MSP |

| **700-Level Faults: Guard crossing communication** | |
|---|---|
| 700 | Could not ACK packet from inguard |
| 701 | Illegal inguard receive task state |
| 702 | Bad receive packet num from inguard |

| | |
|---|---|
| 703 | Bad control byte from inguard |
| 704 | Multiple timeouts sending to inguard |
| 705 | Inguard request reset loop |
| 706 | Unexpected NSA from inguard |
| 707 | Bad packet num in ACK from inguard |
| 708 | Illegal inguard transmit task state |
| 709 | Inguard indefinite ACKWAIT holdoff |
| 710 | Packet too large for inguard |

| **800-Level Faults: Calibration constant** | |
|---|---|
| 800 | Bad Cal Constant ID |
| 801 | Bad Cal Group ID |
| 802 | Save Operation Failed |
| 803 | Save Operation Complete |

| **900-Level Faults: Normal measurement** | |
|---|---|
| 900 | A/D Measurement Failed |
| 901 | Protection Activated |
| 902 | Inguard is overloaded |
| 903 | Ground Protection Activated -- Press Reset |
| 904 | DC Zero Cal Needed -- Go to Calibration in Setup Menu |

| **1000-Level Faults: Non-volatile storage** | |
|---|---|
| 1001 | Repaired missing or corrupted NV files |
| 1002 | Unknown NV constant |

| **1100-Level Faults: Analog operations manager** | |
|---|---|
| 1100 | Guard Crossing Protocol Failed To Start |
| 1101 | Analog Hardware Initialization Failed |
| 1102 | Giving Up On Initializing Hardware |
| 1103 | NV Integrity Check Failed |
| 1104 | Analog Hardware Control Inoperative |

| **1200-Level Faults: GPIB interface** | |
|---|---|
| 1200 | Error opening GPIB Controller |

| | |
|---|---|
| 1201 | Error setting GPIB Primary Address |
| 1202 | Error occurred reading characters from GPIB controller |
| 1203 | Error occurred sending characters to the GPIB controller |
| 1204 | GPIB DOS Error |
| 1205 | GPIB specified Interface Board is not Active Controller |
| 1206 | GPIB no present listening devices |
| 1207 | GPIB interface Board has not been addressed properly |
| 1208 | GPIB invalid argument |
| 1209 | GPIB specified Interface Board is not System Controller |
| 1210 | GPIB I/O operation aborted (time-out) |
| 1211 | GPIB non-existent GPIB board |
| 1212 | GPIB routine not allowed during asynchronous I/O operation |
| 1213 | GPIB no capability for operation |
| 1214 | GPIB File system error |
| 1215 | GPIB command byte transfer error |
| 1216 | GPIB serial poll status byte lost |
| 1217 | GPIB SRQ stuck in ON position |
| 1218 | GPIB table problem |

| **1300-Level Faults: Remote interfaces** | |
|---|---|
| 1300 | Bad Syntax |
| 1301 | Unknown command |
| 1302 | Bad Parameter Count |
| 1303 | Bad Keyword |
| 1304 | Bad Parameter Type |
| 1305 | Bad Parameter Unit |
| 1306 | Bad Parameter Value |
| 1307 | 488.2 I/O DEADLOCK |
| 1308 | 488.2 INTERRUPTED Query |
| 1309 | 488.2 UNTERMINATED Command |
| 1310 | 488.2 Query After Indefinite Response |
| 1311 | Invalid From GPIB Interface |
| 1312 | Invalid From Serial Interface |
| 1313 | Unknown command |
| 1314 | Parameter Too Long |

| | |
|---|---|
| 1315 | Invalid Device Trigger |
| 1316 | *DDT Recursion |
| 1317 | Macro Calls Too Deep |
| 1318 | Remote Serial Port Dead |
| 1320 | Command Applies To Wideband Only |
| 1321 | Command Does Not Apply Wideband |
| 1337 | Already Executing a Procedure |
| 1338 | Already Writing to NV Memory |
| 1339 | MEAS? Timed-Out |
| 1360 | Bad Binary Number |
| 1361 | Bad Binary Block |
| 1362 | Bad Character |
| 1363 | Bad Decimal Number |
| 1364 | Exponent magnitude too large |
| 1365 | Bad Hexadecimal Block |
| 1366 | Bad Hexadecimal Number |
| 1368 | Bad Octal Number |
| 1369 | Too Many Characters |
| 1370 | Bad String |
| 1371 | Report String Too Long |
| 1372 | Service Request (SRQ) String Too Long |
| 1373 | End-of-File String Too Long |
| 1374 | Serial Poll (SPL) String Too Long |
| 1375 | Trigger (GET) String Too Long |
| 1380 | File Operation Failed |

| **1400-Level Faults: Report generation** | |
|---|---|
| 1400 | Unknown Report Requested |
| 1401 | Unknown Report Device Requested |
| 1402 | Serial Port Timeout |
| 1403 | Could not find USB drive |
| 1404 | Could not open report file on USB drive |

| **1500-Level Faults: Real time clock** | |
|---|---|
| 1500 | Could not read time and date |

| | |
|---|---|
| 1501 | Could not set time and date |
| 1502 | Invalid date |
| 1503 | Invalid time |

| **1600-Level Faults: Analog hardware control** | |
|---|---|
| 1601 | Floating point math error |
| 1602 | Bad Reply Size From Inguard |
| 1603 | False MSG Semaphore from Inguard |
| 1604 | Inguard CPU A/D Error |
| 1605 | Inguard CPU Timed Out On Main CPU |
| 1606 | Inguard CPU Command Error |
| 1607 | Timed Out Waiting For Inguard Reply |
| 1608 | Sequence Name Too Long |
| 1609 | Element Array Full |
| 1610 | Name Array Full |
| 1611 | Already Defining A Sequence |
| 1612 | Not Defining A Sequence |
| 1613 | Command Failed |

| **1700-Level Faults: RS-232 serial interface** | |
|---|---|
| 1700 | Bad virtual channel |
| 1701 | Framing/Parity/Overrun on chan %d |
| 1702 | Input queue overflow on chan %d |
| 1705 | Uart failed self Test |
| 1707 | Remote interface UART |
| 1708 | Remote interface USB |
| 1709 | Guard crossing UART |
| 1710 | Boost Crossing UART |

| **1800-Level Faults: Ethernet** | |
|---|---|
| 1800 | Port value out of range |
| 1801 | Could not open the ENET port |
| 1802 | Error reading from ENET port |
| 1803 | Ethernet address not valid |
| 1804 | Ethernet hostname not valid |
| 1805 | Ethernet hostname too long |

| | |
|---|---|
| 1806 | Can not get DHCP IP address |
| 1807 | Ethernet port 1 |
| 1808 | Ethernet remote port |
| 1809 | Port value already in use |
| 1810 | Cannot change ethernet settings now |

| **1900-Level Faults: System** | |
|---|---|
| 1901 | Can not modify file property |
| 1902 | Update execution error |

| **2000-Level Faults: USB host** | |
|---|---|
| 2000 | Failed to mount USB drive |
| 2001 | Failed to copy files |

| **2100-Level Faults: Self-test** |
|---|

| **2200-Level Faults: Utilities** | |
|---|---|
| 2203 | Cannot Set String. Cal Is Secured |
| 2204 | Passcode Must Be 1 to 8 Digits |
| 2205 | Cannot Store. Cal Is Secured |
| 2206 | Invalid Security Passcode |
| 2207 | Cannot Set Clock. Cal Is Secured |
| 2208 | Invalid command |

| **2300-Level Faults: Software Timer** | |
|---|---|
| 2300 | Cannot install MTtick() |
| 2301 | Bad timer selector |

| **2400-Level Faults: USB flash drive** |
|---|

| **2500-Level Faults: Front panel** | |
|---|---|
| 2500 | That variable was not recognized |
| 2501 | The GUI cannot set that variable |
| 2502 | That variable cannot be set to that value |
| 2503 | The set failed for other reasons |

# Appendix B
# Calibration Constant Information

The constants in these tables are arranged by group. Each group is stored as a block in nonvolatile memory. The value given for each constant in this list is the default assigned before the instrument is first calibrated. Defaults are reinstated if you perform a format of the EEPROM ALL or CAL areas.

**Group ZC_BASIC**

| Name | Default | Function |
|---|---|---|
| DAC_Z1 | 398.0 | DAC offset, coarse counts. |
| DAC_Z2 | 17500.0 | DAC offset, fine counts. |
| DAC_RATIO | 16500.0 | DAC coarse/fine count ratio |
| AD_DIV_Z | 0.0 | A/D divided (1/6) range offset, in counts |
| AD_DIV_G | 1.397E-8 | A/D divided (1/6) range gain, V/count |
| AD_X1_Z | 0.0 | A/D x1 range offset, in counts |
| AD_X1_G | 2.328E-9 | A/D x1 range gain, V/count |
| AD_X10_Z | 0.0 | A/D x10 range offset, in counts |
| AD_X10_G | -2.328E-10 | A/D x10 range gain, V/count |
| AD_SDL_Z | 0.0 | A/D SDL range offset, in counts |
| AD_SDL_G | 2.328E-9 | A/D SDL range gain, V/count |
| NULLDAC_Z | 0.0 | Null DAC offset, in volts |
| NULLDAC_G | 6560.0 | Null DAC gain, counts/V |
| SENSOR_C1 | 1.0 | Sensor linearization |
| SENSOR_C2 | 0.0 | Sensor linearization |
| OF_VSQ | 0.0 | V squared turnover coefficient |
| REF_CHECK | 25.0E-6 | A/D - DAC reference difference |

**Group FREQ**

| Name | Default | Function |
|---|---|---|
| FREQ_G | 1.0 | Frequency counter "gain" (crystal error) |

**Group DC_DAC**

| Name | Default | Function |
|---|---|---|
| DAC_G | 3017.0 | DAC gain |

**Group WDC_SENSOR**

| Name | Default | Function |
|---|---|---|
| SENSOR_C1_WB | 3.162277660e-03 | (Autogenerated) |
| SENSOR_C2_WB | 0.0 | (Autogenerated) |

**Group AC_LINEARITY**

| Name | Default | Function |
|---|---|---|
| LN_C | .02 | Coefficient of V^VEX*F^FEX |
| LN_LIM | 100.0 | Linearitization is done only below this frequency |
| LN_VHI | 2.0 | Higher measured amplitude points |
| LN_VLO | 0.6 | Lower point |
| LN_CCALC | 484.0 | Use to figure LN_C (Vfs * F) ^ 2 |

**Group RIPPLE**

| Name | Default | Function |
|---|---|---|
| RIP_LF | 0.24 | Multiplier with slow bit set |
| RIP_HF | 25.6 | Multiplier with slow bit not set |

**Group FACTORY**

| Name | Default | Function |
|---|---|---|
| WB_OHMS | 50.0 | True value of wideband input impedance |
| SHUNT_G | 1.0 | Correction for shunt measurements |
| SHUNT_A1 | 3.153719E-9 | Freq (flatness) correction for SHUNT (vs INPUT1), 1st order |
| SHUNT_A2 | 3.072481E-14 | Freq correction for SHUNT, 2nd |
| INPUT2_LO | 150.0E-6 | 2nd order freq corr for INPUT2 (vs INPUT1), up to 2.2V range (@ 1 MHz) |
| INPUT2_MID | 350.0E-6 | 7V - 220V ranges (@ 1 MHz) |
| INPUT2_HI | -17.0E-6 | 700V and 1000V ranges (@ 100 kHz) |
| DC_LIN | -9.0E-6 | DC linearity fudge |
| L1_2_2MV | 1222e-6 | AC Linearity correction for 2.2 mv range |
| L1_7MV | 100e-6 | AC Linearity correction for 7 mv range |
| L1_22MV | -26e-6 | AC Linearity correction for 22 mv range |
| L1_70MV | -32e-6 | AC Linearity correction for 70 mv range |
| L1_220MV | 0 | AC Linearity correction for 220 mv range |
| L1_700MV | 18.4e-6 | AC Linearity correction for 700 mv range |
| L1_2_2V | 11.5e-6 | AC Linearity correction for 2.2 V range |
| L2_2_2V | 104e-6 | AC Linearity correction for 2.2 V range @ 300 kHz |
| L3_2_2V | 209e-6 | AC Linearity correction for 2.2 V range @ 500 kHz |
| L4_2_2V | 225e-6 | AC Linearity correction for 2.2 V range @ 1 MHz |
| L1_7V | 6.1e-6 | AC Linearity correction for 7 V range |
| L1_22V | 8.1e-6 | AC Linearity correction for 22 V range |
| L2_22V | 20.7e-6 | AC Linearity correction for 22 V range @ 50 kHz |
| L3_22V | 55e-6 | AC Linearity correction for 22 V range @ 100 kHz |
| L1_70V | 6.6e-6 | AC Linearity correction for 70 V range |
| L1_220V | 8.3e-6 | AC Linearity correction for 220 V range |
| L1_700V | 0 | AC Linearity correction for 700 V range |
| L1_1000V | 0 | AC Linearity correction for 1000 V range |

**Group PERMANENT**

| Name | Default | Function |
|---|---|---|
| SLO_LIM | 38.5 | Slow/fast bit threshold |
| AC_LFCAL | 1.0 | Multiplies suggested ref value for lowest frequency |
| WBDC_FREQ | 1000.0 | Frequency at which DI and IA are calibrated for wideband |
| HF_LIMLO | 102.0E+3 | Point below which we switch back to low freq configuration |
| HF_LIMHI | 105.0E+3 | Point above which we switch to high freq configuration |
| MIN_FREQ | 9.0 | Below this point we consider the input to be DC |
| MAX_FREQ | 1.21E+6 | Highest frequency measure normally |
| MAX_WB_FREQ | 52.01E+6 | Highest frequency wide band measures |
| FAST_LIM | 200.0 | Above this we used fixed input and chopper diffential delay |

**Group WB_LINEARITY**

| Name | Default | Function |
|---|---|---|
| WBL_Y2 | 0.0 | scaled error difference between 2.0V and 0.6V at 10 MHz |
| WBL_Y3 | 0.0 | scaled error difference between 2.0V and 0.6V at 50 MHz |

**Group WBCABLE**

| Name | Default | Function |
|---|---|---|
| WBCABLE_CORR | 1.0 | The one and only correction for the cable, at 50 MHz |

**Group DC_2_2MV**

| Name | Default | Function |
|---|---|---|
| DI_2_2MV | 5000.0 | 2_2MV range DAC volts per input volt |
| OF_2_2MV | 0.0 | 2_2MV range DC offset |

**Group ZC_2_2MV**

| Name | Default | Function |
|---|---|---|
| Z_2_2MV | 0.0 | 2_2MV range zero |
| SHO_2_2MV | 0.0 | 2_2MV AUX input offset |
| IA_2_2MV | 0.001 | 2_2MV range A/D volts per input volt |

**Group AC_2_2MV**

| Name | Default | Function |
|---|---|---|
| F1_2_2MV | 1.0 | 2_2MV range flatness correction 1 (10 Hz) |
| F2_2_2MV | 1.0 | 2_2MV range flatness correction 2 (100 Hz) |
| F3_2_2MV | 1.0 | 2_2MV range flatness correction 3 (1 kHz) |
| F4_2_2MV | 1.0 | 2_2MV range flatness correction 4 (10 kHz) |
| F5_2_2MV | 1.0 | 2_2MV range flatness correction 5 (20 kHz) |
| F6_2_2MV | 1.0 | 2_2MV range flatness correction 6 (50 kHz) |
| F7_2_2MV | 1.0 | 2_2MV range flatness correction 7 (100 kHz) |
| F8_2_2MV | 1.0 | 2_2MV range flatness correction 8 (300 kHz) |
| F9_2_2MV | 1.0 | 2_2MV range flatness correction 9 (500 kkHz) |
| F10_2_2MV | 1.0 | 2_2MV range flatness correction 10 (800 Hz) |
| F11_2_2MV | 1.0 | 2_2MV range flatness correction 11 (1 MHz) |

**Group DC_7MV**

| Name | Default | Function |
|---|---|---|
| DI_7MV | 1000.0 | 7MV range DAC volts per input volt |
| OF_7MV | 0.0 | 7MV range DC offset |

**Group ZC_7MV**

| Name | Default | Function |
|---|---|---|
| Z_7MV | 0.0 | 7MV range zero |
| SHO_7MV | 0.0 | 7MV AUX input offset |
| IA_7MV | 0.00316228 | 7MV range A/D volts per input volt |

**Group AC_7MV**

| Name | Default | Function |
|---|---|---|
| F1_7MV | 1.0 | 7MV range flatness correction 1 (10 Hz) |
| F2_7MV | 1.0 | 7MV range flatness correction 2 (100 Hz) |
| F3_7MV | 1.0 | 7MV range flatness correction 3 (1 kHz) |
| F4_7MV | 1.0 | 7MV range flatness correction 4 (10 kHz) |
| F5_7MV | 1.0 | 7MV range flatness correction 5 (20 kHz) |
| F6_7MV | 1.0 | 7MV range flatness correction 6 (50 kHz) |
| F7_7MV | 1.0 | 7MV range flatness correction 7 (100 kHz) |
| F8_7MV | 1.0 | 7MV range flatness correction 8 (300 kHz) |
| F9_7MV | 1.0 | 7MV range flatness correction 9 (500 kHz) |
| F10_7MV | 1.0 | 7MV range flatness correction 10 (800 kHz) |
| F11_7MV | 1.0 | 7MV range flatness correction 11 (1 MHz) |

**Group DC_22MV**

| Name | Default | Function |
|---|---|---|
| DI_22MV | 500.0 | 22MV range DAC volts per input volt |
| OF_22MV | 0.0 | 22MV range DC offset |

**Group ZC_22MV**

| Name | Default | Function |
|---|---|---|
| Z_22MV | 0.0 | 22MV range zero |
| SHO_22MV | 0.0 | 22MV AUX input offset |
| IA_22MV | 0.01 | 22MV range A/D volts per input volt |

**Group AC_22MV**

| Name | Default | Function |
|---|---|---|
| F1_22MV | 1.0 | 22MV range flatness correction 1 (10 Hz) |
| F2_22MV | 1.0 | 22MV range flatness correction 2 (100 Hz) |
| F3_22MV | 1.0 | 22MV range flatness correction 3 (1 kHz) |
| F4_22MV | 1.0 | 22MV range flatness correction 4 (10 kHz) |
| F5_22MV | 1.0 | 22MV range flatness correction 5 (20 kHz) |
| F6_22MV | 1.0 | 22MV range flatness correction 6 (50 kHz) |
| F7_22MV | 1.0 | 22MV range flatness correction 7 (100 kHz) |
| F8_22MV | 1.0 | 22MV range flatness correction 8 (300 kHz) |
| F9_22MV | 1.0 | 22MV range flatness correction 9 (500 kHz) |
| F10_22MV | 1.0 | 22MV range flatness correction 10 (1 MHz) |

**Group DC_70MV**

| Name | Default | Function |
|---|---|---|
| DI_70MV | 100.0 | 70MV range DAC volts per input volt |
| OF_70MV | 0.0 | 70MV range DC offset |

**Group ZC_70MV**

| Name | Default | Function |
|---|---|---|
| Z_70MV | 0.0 | 70MV range zero |
| SHO_70MV | 0.0 | 70MV AUX input offset |
| IA_70MV | 0.0316228 | 70MV range A/D volts per input volt |

**Group AC_70MV**

| Name | Default | Function |
|---|---|---|
| F1_70MV | 1.0 | 70MV range flatness correction 1 (10 Hz) |
| F2_70MV | 1.0 | 70MV range flatness correction 2 (100 Hz) |
| F3_70MV | 1.0 | 70MV range flatness correction 3 (1 kHz) |
| F4_70MV | 1.0 | 70MV range flatness correction 4 (10 kHz) |
| F5_70MV | 1.0 | 70MV range flatness correction 5 (20 kHz) |
| F6_70MV | 1.0 | 70MV range flatness correction 6 (50 kHz) |
| F7_70MV | 1.0 | 70MV range flatness correction 7 (100 kHz) |
| F8_70MV | 1.0 | 70MV range flatness correction 8 (300 kHz) |
| F9_70MV | 1.0 | 70MV range flatness correction 9 (500 kHz) |
| F10_70MV | 1.0 | 70MV range flatness correction 10 (1 MHz) |

**Group DC_220MV**

| Name | Default | Function |
|---|---|---|
| DI_220MV | 50.0 | 220MV range DAC volts per input volt |
| OF_220MV | 0.0 | 220MV range DC offset |

**Group ZC_220MV**

| Name | Default | Function |
|---|---|---|
| Z_220MV | 0.0 | 220MV range zero |
| SHO_220MV | 0.0 | 220MV AUX input offset |
| IA_220MV | 0.1 | 220MV range A/D volts per input volt |

**Group AC_220MV**

| Name | Default | Function |
|---|---|---|
| F1_220MV | 1.0 | 220MV range flatness correction 1 (10 Hz) |
| F2_220MV | 1.0 | 220MV range flatness correction 2 (100 Hz) |
| F3_220MV | 1.0 | 220MV range flatness correction 3 (1 kHz) |
| F4_220MV | 1.0 | 220MV range flatness correction 4 (10 kHz) |
| F5_220MV | 1.0 | 220MV range flatness correction 5 (20 kHz) |
| F6_220MV | 1.0 | 220MV range flatness correction 6 (50 kHz) |
| F7_220MV | 1.0 | 220MV range flatness correction 7 (100 kHz) |
| F8_220MV | 1.0 | 220MV range flatness correction 8 (300 kHz) |
| F9_220MV | 1.0 | 220MV range flatness correction 9 (500 kHz) |
| F10_220MV | 1.0 | 220MV range flatness correction 10 (1 MHz) |

**Group DC_700MV**

| Name | Default | Function |
|---|---|---|
| DI_700MV | 10.0 | 700MV range DAC volts per input volt |
| OF_700MV | 0.0 | 700MV range DC offset |

**Group ZC_700MV**

| Name | Default | Function |
|---|---|---|
| Z_700MV | 0.0 | 700MV range zero |
| SHO_700MV | 0.0 | 700MV AUX input offset |
| IA_700MV | 0.316228 | 700MV range A/D volts per input volt |

**Group AC_700MV**

| Name | Default | Function |
|---|---|---|
| F1_700MV | 1.0 | 700MV range flatness correction 1 (10 Hz) |
| F2_700MV | 1.0 | 700MV range flatness correction 2 (100 Hz) |
| F3_700MV | 1.0 | 700MV range flatness correction 3 (1 kHz) |
| F4_700MV | 1.0 | 700MV range flatness correction 4 (10 kHz) |
| F5_700MV | 1.0 | 700MV range flatness correction 5 (20 kHz) |
| F6_700MV | 1.0 | 700MV range flatness correction 6 (50 kHz) |
| F7_700MV | 1.0 | 700MV range flatness correction 7 (100 kHz) |
| F8_700MV | 1.0 | 700MV range flatness correction 8 (300 kHz) |
| F9_700MV | 1.0 | 700MV range flatness correction 9 (500 kHz) |
| F10_700MV | 1.0 | 700MV range flatness correction 10 (1 MHz) |

**Group DC_2_2V**

| Name | Default | Function |
|---|---|---|
| DI_2_2V | 5.0 | 2_2V range DAC volts per input volt |
| OF_2_2V | 0.0 | 2_2V range DC offset |

**Group ZC_2_2V**

| Name | Default | Function |
|---|---|---|
| Z_2_2V | 0.0 | 2_2V range zero |
| SHO_2_2V | 0.0 | 2_2V AUX input offset |
| IA_2_2V | 1.0 | 2_2V range A/D volts per input volt |

**Group AC_2_2V**

| Name | Default | Function |
|---|---|---|
| F1_2_2V | 1.0 | 2_2V range flatness correction 1 (10 Hz) |
| F2_2_2V | 1.0 | 2_2V range flatness correction 2 (100 Hz) |
| F3_2_2V | 1.0 | 2_2V range flatness correction 3 (1 kHz) |
| F4_2_2V | 1.0 | 2_2V range flatness correction 4 (10 kHz) |
| F5_2_2V | 1.0 | 2_2V range flatness correction 5 (20 kHz) |
| F6_2_2V | 1.0 | 2_2V range flatness correction 6 (50 kHz) |
| F7_2_2V | 1.0 | 2_2V range flatness correction 7 (100 kHz) |
| F8_2_2V | 1.0 | 2_2V range flatness correction 8 (300 kHz) |
| F9_2_2V | 1.0 | 2_2V range flatness correction 9 (500 kHz) |
| F10_2_2V | 1.0 | 2_2V range flatness correction 10 (1 MHz) |

**Group DC_7V**

| Name | Default | Function |
|---|---|---|
| DI_7V | 1.0 | 7V range DAC volts per input volt |
| OF_7V | 0.0 | 7V range DC offset |

**Group ZC_7V**

| Name | Default | Function |
|---|---|---|
| Z_7V | 0.0 | 7V range zero |
| SHO_7V | 0.0 | 7V AUX input offset |
| IA_7V | 3.16228 | 7V range A/D volts per input volt |

**Group AC_7V**

| Name | Default | Function |
|---|---|---|
| F1_7V | 1.0 | 7V range flatness correction 1 (10 Hz) |
| F2_7V | 1.0 | 7V range flatness correction 2 (100 Hz) |
| F3_7V | 1.0 | 7V range flatness correction 3 (1 kHz) |
| F4_7V | 1.0 | 7V range flatness correction 4 (10 kHz) |
| F5_7V | 1.0 | 7V range flatness correction 5 (20 kHz) |
| F6_7V | 1.0 | 7V range flatness correction 6 (50 kHz) |
| F7_7V | 1.0 | 7V range flatness correction 7 (100 kHz) |

**Group ZC_7VHF**

| Name | Default | Function |
|---|---|---|
| Z_7VHF | 0.0 | 7VHF range zero |
| SHO_7VHF | 0.0 | 7VHF AUX input offset |
| IA_7VHF | 3.16228 | 7VHF range A/D volts per input volt |

**Group AC_7VHF**

| Name | Default | Function |
|---|---|---|
| F1_7VHF | 1.0 | 7VHF range flatness correction 1 (100 kHz) |
| F2_7VHF | 1.0 | 7VHF range flatness correction 2 (300 kHz) |
| F3_7VHF | 1.0 | 7VHF range flatness correction 3 (500 kHz) |
| F4_7VHF | 1.0 | 7VHF range flatness correction 4 (800 kHz) |
| F5_7VHF | 1.0 | 7VHF range flatness correction 5 (1 MHz) |

**Group DC_22V**

| Name | Default | Function |
|---|---|---|
| DI_22V | 0.5 | 22V range DAC volts per input volt |
| OF_22V | 0.0 | 22V range DC offset |

**Group ZC_22V**

| Name | Default | Function |
|---|---|---|
| Z_22V | 0.0 | 22V range zero |
| SHO_22V | 0.0 | 22V AUX input offset |
| IA_22V | 10.0 | 22V range A/D volts per input volt |

**Group AC_22V**

| Name | Default | Function |
|---|---|---|
| F1_22V | 1.0 | 22V range flatness correction 1 (10 Hz) |
| F2_22V | 1.0 | 22V range flatness correction 2 (100 Hz) |
| F3_22V | 1.0 | 22V range flatness correction 3 (1 kHz) |
| F4_22V | 1.0 | 22V range flatness correction 4 (10 kHz) |
| F5_22V | 1.0 | 22V range flatness correction 5 (20 kHz) |
| F6_22V | 1.0 | 22V range flatness correction 6 (50 kHz) |
| F7_22V | 1.0 | 22V range flatness correction 7 (100 kHz) |

**Group ZC_22VHF**

| Name | Default | Function |
|---|---|---|
| Z_22VHF | 0.0 | 22VHF range zero |
| SHO_22VHF | 0.0 | 22VHF AUX input offset |
| IA_22VHF | 10.0 | 22VHF range A/D volts per input volt |

**Group AC_22VHF**

| Name | Default | Function |
|---|---|---|
| F1_22VHF | 1.0 | 22VHF range flatness correction 1 (100 kHz) |
| F2_22VHF | 1.0 | 22VHF range flatness correction 2 (300 kHz) |
| F3_22VHF | 1.0 | 22VHF range flatness correction 3 (500 kHz) |
| F4_22VHF | 1.0 | 22VHF range flatness correction 4 (800 kHz) |
| F5_22VHF | 1.0 | 22VHF range flatness correction 5 (1 MHz) |

**Group DC_70V**

| Name | Default | Function |
|---|---|---|
| DI_70V | 0.1 | 70V range DAC volts per input volt |
| OF_70V | 0.0 | 70V range DC offset |

**Group ZC_70V**

| Name | Default | Function |
|---|---|---|
| Z_70V | 0.0 | 70V range zero |
| SHO_70V | 0.0 | 70V AUX input offset |
| IA_70V | 31.6228 | 70V range A/D volts per input volt |

**Group AC_70V**

| Name | Default | Function |
|---|---|---|
| F1_70V | 1.0 | 70V range flatness correction 1 (10 Hz) |
| F2_70V | 1.0 | 70V range flatness correction 2 (100 Hz) |
| F3_70V | 1.0 | 70V range flatness correction 3 (1 kHz) |
| F4_70V | 1.0 | 70V range flatness correction 4 (10 kHz) |
| F5_70V | 1.0 | 70V range flatness correction 5 (20 kHz) |
| F6_70V | 1.0 | 70V range flatness correction 6 (50 kHz) |
| F7_70V | 1.0 | 70V range flatness correction 7 (100 kHz) |
| F8_70V | 1.0 | 70V range flatness correction 8 (300 kHz) |
| F9_70V | 1.0 | 70V range flatness correction 9 (500 kHz) |
| F10_70V | 1.0 | 70V range flatness correction 10 (1 MHz) |

**Group DC_220V**

| Name | Default | Function |
|---|---|---|
| DI_220V | 0.05 | 220V range DAC volts per input volt |
| OF_220V | 0.0 | 220V range DC offset |

**Group ZC_220V**

| Name | Default | Function |
|---|---|---|
| Z_220V | 0.0 | 220V range zero |
| SHO_220V | 0.0 | 220V AUX input offset |
| IA_220V | 100.0 | 220V range A/D volts per input volt |

**Group AC_220V**

| Name | Default | Function |
|---|---|---|
| F1_220V | 1.0 | 220V range flatness correction 1 (10 Hz) |
| F2_220V | 1.0 | 220V range flatness correction 2 (100 Hz) |
| F3_220V | 1.0 | 220V range flatness correction 3 (1 kHz) |
| F4_220V | 1.0 | 220V range flatness correction 4 (10 kHz) |
| F5_220V | 1.0 | 220V range flatness correction 5 (20 kHz) |
| F6_220V | 1.0 | 220V range flatness correction 6 (50 kHz) |
| F7_220V | 1.0 | 220V range flatness correction 7 (100 kHz) |
| F8_220V | 1.0 | 220V range flatness correction 8 (300 kHz) |

**Group DC_700V**

| Name | Default | Function |
|---|---|---|
| DI_700V | 0.01 | 700V range DAC volts per input volt |
| OF_700V | 0.0 | 700V range DC offset |

**Group ZC_700V**

| Name | Default | Function |
|---|---|---|
| Z_700V | 0.0 | 700V range zero |
| SHO_700V | 0.0 | 700V AUX input offset |
| IA_700V | 316.228 | 700V range A/D volts per input volt |

**Group AC_700V**

| Name | Default | Function |
|---|---|---|
| F1_700V | 1.0 | 700V range flatness correction 1 (10 Hz) |
| F2_700V | 1.0 | 700V range flatness correction 2 (100 Hz) |
| F3_700V | 1.0 | 700V range flatness correction 3 (1 kHz) |
| F4_700V | 1.0 | 700V range flatness correction 4 (10 kHz) |
| F5_700V | 1.0 | 700V range flatness correction 5 (20 kHz) |
| F6_700V | 1.0 | 700V range flatness correction 6 (50 kHz) |
| F7_700V | 1.0 | 700V range flatness correction 7 (100 kHz) |

**Group DC_1000V**

| Name | Default | Function |
|---|---|---|
| DI_1000V | 0.005 | 1000V range DAC volts per input volt |
| OF_1000V | 0.0 | 1000V range DC offset |

**Group ZC_1000V**

| Name | Default | Function |
|---|---|---|
| Z_1000V | 0.0 | 1000V range zero |
| SHO_1000V | 0.0 | 1000V AUX input offset |
| IA_1000V | 1000.0 | 1000V range A/D volts per input volt |

**Group AC_1000V**

| Name | Default | Function |
|---|---|---|
| F1_1000V | 1.0 | 1000V range flatness correction 1 (10 Hz) |
| F2_1000V | 1.0 | 1000V range flatness correction 2 (100 Hz) |
| F3_1000V | 1.0 | 1000V range flatness correction 3 (1 kHz) |
| F4_1000V | 1.0 | 1000V range flatness correction 4 (10 kHz) |
| F5_1000V | 1.0 | 1000V range flatness correction 5 (20 kHz) |
| F6_1000V | 1.0 | 1000V range flatness correction 6 (50 kHz) |
| F7_1000V | 1.0 | 1000V range flatness correction 7 (100 kHz) |

**Group WDC_2_2MV**

| Name | Default | Function |
|---|---|---|
| DI_2_2MV_WB | 5000.0 | 2_2MV range, wideband input, DAC volts per input volt |
| IA_2_2MV_WB | 0.0316228 | 2_2MV range A/D volts per input volt |

**Group WAC_2_2MV**

| Name | Default | Function |
|---|---|---|
| F1_2_2MV_WB | 1.0 | 2_2MV range, wideband input, flatness correction 1 (10 Hz) |
| F2_2_2MV_WB | 1.0 | 2_2MV range, wideband input, flatness correction 2 (50 Hz) |
| F3_2_2MV_WB | 1.0 | 2_2MV range, wideband input, flatness correction 3 (400 Hz) |
| F4_2_2MV_WB | 1.0 | 2_2MV range, wideband input, flatness correction 4 (1 kHz) |
| F5_2_2MV_WB | 1.0 | 2_2MV range, wideband input, flatness correction 5 (2 kHz) |
| F6_2_2MV_WB | 1.0 | 2_2MV range, wideband input, flatness correction 6 (6 kHz) |
| F7_2_2MV_WB | 1.0 | 2_2MV range, wideband input, flatness correction 7 (10 kHz) |
| F8_2_2MV_WB | 1.0 | 2_2MV range, wideband input, flatness correction 8 (20 kHz) |
| F9_2_2MV_WB | 1.0 | 2_2MV range, wideband input, flatness correction 9 (50 kHz) |
| F10_2_2MV_WB | 1.0 | 2_2MV range, wideband input, flatness correction 10 (70 kHz) |
| F11_2_2MV_WB | 1.0 | 2_2MV range, wideband input, flatness correction 11 (100 kHz) |
| F12_2_2MV_WB | 1.0 | 2_2MV range, wideband input, flatness correction 12 (500 kHz) |
| F13_2_2MV_WB | 1.0 | 2_2MV range, wideband input, flatness correction 13 (2 MHz) |
| F14_2_2MV_WB | 1.0 | 2_2MV range, wideband input, flatness correction 14 (4 MHz) |
| F15_2_2MV_WB | 1.0 | 2_2MV range, wideband input, flatness correction 15 (9 MHz) |
| F16_2_2MV_WB | 1.0 | 2_2MV range, wideband input, flatness correction 16 (12 MHz) |
| F17_2_2MV_WB | 1.0 | 2_2MV range, wideband input, flatness correction 17 (16 MHz) |
| F18_2_2MV_WB | 1.0 | 2_2MV range, wideband input, flatness correction 18 (20 MHz) |
| F19_2_2MV_WB | 1.0 | 2_2MV range, wideband input, flatness correction 19 (30 MHz) |
| F20_2_2MV_WB | 1.0 | 2_2MV range, wideband input, flatness correction 20 (35 MHz) |
| F21_2_2MV_WB | 1.0 | 2_2MV range, wideband input, flatness correction 21 (40 MHz) |
| F22_2_2MV_WB | 1.0 | 2_2MV range, wideband input, flatness correction 22 (45 MHz) |
| F23_2_2MV_WB | 1.0 | 2_2MV range, wideband input, flatness correction 23 (50 MHz) |

**Group WDC_7MV**

| Name | Default | Function |
|---|---|---|
| DI_7MV_WB | 1000.0 | 7MV range, wideband input, DAC volts per input volt |
| IA_7MV_WB | 0.1 | 7MV range A/D volts per input volt |

**Group WAC_7MV**

| Name | Default | Function |
|---|---|---|
| F1_7MV_WB | 1.0 | 7MV range, wideband input, flatness correction 1 (10 Hz) |
| F2_7MV_WB | 1.0 | 7MV range, wideband input, flatness correction 2 (50 Hz) |
| F3_7MV_WB | 1.0 | 7MV range, wideband input, flatness correction 3 (400 Hz) |
| F4_7MV_WB | 1.0 | 7MV range, wideband input, flatness correction 4 (1 kHz) |
| F5_7MV_WB | 1.0 | 7MV range, wideband input, flatness correction 5 (2 kHz) |
| F6_7MV_WB | 1.0 | 7MV range, wideband input, flatness correction 6 (6 kHz) |
| F7_7MV_WB | 1.0 | 7MV range, wideband input, flatness correction 7 (10 kHz) |
| F8_7MV_WB | 1.0 | 7MV range, wideband input, flatness correction 8 (20 kHz) |
| F9_7MV_WB | 1.0 | 7MV range, wideband input, flatness correction 9 (50 kHz) |
| F10_7MV_WB | 1.0 | 7MV range, wideband input, flatness correction 10 (70 kHz) |
| F11_7MV_WB | 1.0 | 7MV range, wideband input, flatness correction 11 (100 kHz) |
| F12_7MV_WB | 1.0 | 7MV range, wideband input, flatness correction 12 (500 kHz) |
| F13_7MV_WB | 1.0 | 7MV range, wideband input, flatness correction 13 (2 MHz) |
| F14_7MV_WB | 1.0 | 7MV range, wideband input, flatness correction 14 (4 MHz) |
| F15_7MV_WB | 1.0 | 7MV range, wideband input, flatness correction 15 (9 MHz) |
| F16_7MV_WB | 1.0 | 7MV range, wideband input, flatness correction 16 (12 MHz) |
| F17_7MV_WB | 1.0 | 7MV range, wideband input, flatness correction 17 (16 MHz) |
| F18_7MV_WB | 1.0 | 7MV range, wideband input, flatness correction 18 (20 MHz) |
| F19_7MV_WB | 1.0 | 7MV range, wideband input, flatness correction 19 (30 MHz) |
| F20_7MV_WB | 1.0 | 7MV range, wideband input, flatness correction 20 (35 MHz) |
| F21_7MV_WB | 1.0 | 7MV range, wideband input, flatness correction 21 (40 MHz) |
| F22_7MV_WB | 1.0 | 7MV range, wideband input, flatness correction 22 (45 MHz) |
| F23_7MV_WB | 1.0 | 7MV range, wideband input, flatness correction 23 (50 MHz) |

**Group WDC_22MV**

| Name | Default | Function |
|---|---|---|
| DI_22MV_WB | 500.0 | 22MV range, wideband input, DAC volts per input volt |
| IA_22MV_WB | 0.316228 | 22MV range A/D volts per input volt |

**Group WAC_22MV**

| Name | Default | Function |
|---|---|---|
| F1_22MV_WB | 1.0 | 22MV range, wideband input, flatness correction 1 (10 Hz) |
| F2_22MV_WB | 1.0 | 22MV range, wideband input, flatness correction 2 (50 Hz) |
| F3_22MV_WB | 1.0 | 22MV range, wideband input, flatness correction 3 (400 Hz) |
| F4_22MV_WB | 1.0 | 22MV range, wideband input, flatness correction 4 (1 kHz) |
| F5_22MV_WB | 1.0 | 22MV range, wideband input, flatness correction 5 (2 kHz) |
| F6_22MV_WB | 1.0 | 22MV range, wideband input, flatness correction 6 (6 kHz) |
| F7_22MV_WB | 1.0 | 22MV range, wideband input, flatness correction 7 (10 kHz) |
| F8_22MV_WB | 1.0 | 22MV range, wideband input, flatness correction 8 (20 kHz) |
| F9_22MV_WB | 1.0 | 22MV range, wideband input, flatness correction 9 (50 kHz) |
| F10_22MV_WB | 1.0 | 22MV range, wideband input, flatness correction 10 (70 kHz) |
| F11_22MV_WB | 1.0 | 22MV range, wideband input, flatness correction 11 (100 kHz) |
| F12_22MV_WB | 1.0 | 22MV range, wideband input, flatness correction 12 (500 kHz) |
| F13_22MV_WB | 1.0 | 22MV range, wideband input, flatness correction 13 (2 MHz) |
| F14_22MV_WB | 1.0 | 22MV range, wideband input, flatness correction 14 (4 MHz) |
| F15_22MV_WB | 1.0 | 22MV range, wideband input, flatness correction 15 (9 MHz) |
| F16_22MV_WB | 1.0 | 22MV range, wideband input, flatness correction 16 (12 MHz) |
| F17_22MV_WB | 1.0 | 22MV range, wideband input, flatness correction 17 (16 MHz) |
| F18_22MV_WB | 1.0 | 22MV range, wideband input, flatness correction 18 (20 MHz) |
| F19_22MV_WB | 1.0 | 22MV range, wideband input, flatness correction 19 (30 MHz) |
| F20_22MV_WB | 1.0 | 22MV range, wideband input, flatness correction 20 (35 MHz) |
| F21_22MV_WB | 1.0 | 22MV range, wideband input, flatness correction 21 (40 MHz) |
| F22_22MV_WB | 1.0 | 22MV range, wideband input, flatness correction 22 (45 MHz) |
| F23_22MV_WB | 1.0 | 22MV range, wideband input, flatness correction 23 (50 MHz) |

**Group WDC_70MV**

| Name | Default | Function |
|---|---|---|
| DI_70MV_WB | 100.0 | 70MV range, wideband input, DAC volts per input volt |
| IA_70MV_WB | 1.0 | 70MV range A/D volts per input volt |

**Group WAC_70MV**

| Name | Default | Function |
|---|---|---|
| F1_70MV_WB | 1.0 | 70MV range, wideband input, flatness correction 1 (10 Hz) |
| F2_70MV_WB | 1.0 | 70MV range, wideband input, flatness correction 2 (50 Hz) |
| F3_70MV_WB | 1.0 | 70MV range, wideband input, flatness correction 3 (400 Hz) |
| F4_70MV_WB | 1.0 | 70MV range, wideband input, flatness correction 4 (1 kHz) |
| F5_70MV_WB | 1.0 | 70MV range, wideband input, flatness correction 5 (2 kHz) |
| F6_70MV_WB | 1.0 | 70MV range, wideband input, flatness correction 6 (6 kHz) |
| F7_70MV_WB | 1.0 | 70MV range, wideband input, flatness correction 7 (10 kHz) |
| F8_70MV_WB | 1.0 | 70MV range, wideband input, flatness correction 8 (20 kHz) |
| F9_70MV_WB | 1.0 | 70MV range, wideband input, flatness correction 9 (50 kHz) |
| F10_70MV_WB | 1.0 | 70MV range, wideband input, flatness correction 10 (70 kHz) |
| F11_70MV_WB | 1.0 | 70MV range, wideband input, flatness correction 11 (100 kHz) |
| F12_70MV_WB | 1.0 | 70MV range, wideband input, flatness correction 12 (500 kHz) |
| F13_70MV_WB | 1.0 | 70MV range, wideband input, flatness correction 13 (2 MHz) |
| F14_70MV_WB | 1.0 | 70MV range, wideband input, flatness correction 14 (4 MHz) |
| F15_70MV_WB | 1.0 | 70MV range, wideband input, flatness correction 15 (9 MHz) |
| F16_70MV_WB | 1.0 | 70MV range, wideband input, flatness correction 16 (12 MHz) |
| F17_70MV_WB | 1.0 | 70MV range, wideband input, flatness correction 17 (16 MHz) |
| F18_70MV_WB | 1.0 | 70MV range, wideband input, flatness correction 18 (20 MHz) |
| F19_70MV_WB | 1.0 | 70MV range, wideband input, flatness correction 19 (30 MHz) |
| F20_70MV_WB | 1.0 | 70MV range, wideband input, flatness correction 20 (35 MHz) |
| F21_70MV_WB | 1.0 | 70MV range, wideband input, flatness correction 21 (40 MHz) |
| F22_70MV_WB | 1.0 | 70MV range, wideband input, flatness correction 22 (45 MHz) |
| F23_70MV_WB | 1.0 | 70MV range, wideband input, flatness correction 23 (50 MHz) |

**Group WDC_220MV**

| Name | Default | Function |
|---|---|---|
| DI_220MV_WB | 31.6228 | 220MV range, wideband input, DAC volts per input volt |
| IA_220MV_WB | 3.16228 | 220MV range A/D volts per input volt |

**Group WAC_220MV**

| Name | Default | Function |
|---|---|---|
| F1_220MV_WB | 1.0 | 220MV range, wideband input, flatness correction 1 (10 Hz) |
| F2_220MV_WB | 1.0 | 220MV range, wideband input, flatness correction 2 (50 Hz) |
| F3_220MV_WB | 1.0 | 220MV range, wideband input, flatness correction 3 (400 Hz) |
| F4_220MV_WB | 1.0 | 220MV range, wideband input, flatness correction 4 (1 kHz) |
| F5_220MV_WB | 1.0 | 220MV range, wideband input, flatness correction 5 (4 kHz) |
| F6_220MV_WB | 1.0 | 220MV range, wideband input, flatness correction 6 (30 kHz) |
| F7_220MV_WB | 1.0 | 220MV range, wideband input, flatness correction 7 (100 kHz) |
| F8_220MV_WB | 1.0 | 220MV range, wideband input, flatness correction 8 (300 kHz) |
| F9_220MV_WB | 1.0 | 220MV range, wideband input, flatness correction 9 (1 MHz) |
| F10_220MV_WB | 1.0 | 220MV range, wideband input, flatness correction 10 (4 MHz) |
| F11_220MV_WB | 1.0 | 220MV range, wideband input, flatness correction 11 (10 MHz) |
| F12_220MV_WB | 1.0 | 220MV range, wideband input, flatness correction 12 (20 MHz) |
| F13_220MV_WB | 1.0 | 220MV range, wideband input, flatness correction 13 (30 MHz) |
| F14_220MV_WB | 1.0 | 220MV range, wideband input, flatness correction 14 (40 MHz) |
| F15_220MV_WB | 1.0 | 220MV range, wideband input, flatness correction 15 (50 MHz) |

**Group WDC_700MV**

| Name | Default | Function |
|---|---|---|
| DI_700MV_WB | 10.0 | 700MV range, wideband input, DAC volts per input volt |
| IA_700MV_WB | 10.0 | 700MV range A/D volts per input volt |

**Group WAC_700MV**

| Name | Default | Function |
|---|---|---|
| F1_700MV_WB | 1.0 | 700MV range, wideband input, flatness correction 1 (10 Hz) |
| F2_700MV_WB | 1.0 | 700MV range, wideband input, flatness correction 2 (50 Hz) |
| F3_700MV_WB | 1.0 | 700MV range, wideband input, flatness correction 3 (400 Hz) |
| F4_700MV_WB | 1.0 | 700MV range, wideband input, flatness correction 4 (1 kHz) |
| F5_700MV_WB | 1.0 | 700MV range, wideband input, flatness correction 5 (4 kHz) |
| F6_700MV_WB | 1.0 | 700MV range, wideband input, flatness correction 6 (30 kHz) |
| F7_700MV_WB | 1.0 | 700MV range, wideband input, flatness correction 7 (100 kHz) |
| F8_700MV_WB | 1.0 | 700MV range, wideband input, flatness correction 8 (300 kHz) |
| F9_700MV_WB | 1.0 | 700MV range, wideband input, flatness correction 9 (1 MHz) |
| F10_700MV_WB | 1.0 | 700MV range, wideband input, flatness correction 10 (4 MHz) |
| F11_700MV_WB | 1.0 | 700MV range, wideband input, flatness correction 11 (10 MHz) |
| F12_700MV_WB | 1.0 | 700MV range, wideband input, flatness correction 12 (20 MHz) |
| F13_700MV_WB | 1.0 | 700MV range, wideband input, flatness correction 13 (30 MHz) |
| F14_700MV_WB | 1.0 | 700MV range, wideband input, flatness correction 14 (40 MHz) |
| F15_700MV_WB | 1.0 | 700MV range, wideband input, flatness correction 15 (50 MHz) |

**Group WDC_2_2V**

| Name | Default | Function |
|---|---|---|
| DI_2_2V_WB | 3.16228 | 2_2V range, wideband input, DAC volts per input volt |
| IA_2_2V_WB | 31.6228 | 2_2V range A/D volts per input volt |

**Group WAC_2_2V**

| Name | Default | Function |
|---|---|---|
| F1_2_2V_WB | 1.0 | 2_2V range, wideband input, flatness correction 1 (10 Hz) |
| F2_2_2V_WB | 1.0 | 2_2V range, wideband input, flatness correction 2 (50 Hz) |
| F3_2_2V_WB | 1.0 | 2_2V range, wideband input, flatness correction 3 (400 Hz) |
| F4_2_2V_WB | 1.0 | 2_2V range, wideband input, flatness correction 4 (1 kHz) |
| F5_2_2V_WB | 1.0 | 2_2V range, wideband input, flatness correction 5 (4 kHz) |
| F6_2_2V_WB | 1.0 | 2_2V range, wideband input, flatness correction 6 (30 kHz) |
| F7_2_2V_WB | 1.0 | 2_2V range, wideband input, flatness correction 7 (100 kHz) |
| F8_2_2V_WB | 1.0 | 2_2V range, wideband input, flatness correction 8 (300 kHz) |
| F9_2_2V_WB | 1.0 | 2_2V range, wideband input, flatness correction 9 (1 MHz) |
| F10_2_2V_WB | 1.0 | 2_2V range, wideband input, flatness correction 10 (4 MHz) |
| F11_2_2V_WB | 1.0 | 2_2V range, wideband input, flatness correction 11 (10 MHz) |
| F12_2_2V_WB | 1.0 | 2_2V range, wideband input, flatness correction 12 (20 MHz) |
| F13_2_2V_WB | 1.0 | 2_2V range, wideband input, flatness correction 13 (30 MHz) |
| F14_2_2V_WB | 1.0 | 2_2V range, wideband input, flatness correction 14 (40 MHz) |
| F15_2_2V_WB | 1.0 | 2_2V range, wideband input, flatness correction 15 (50 MHz) |

**Group WDC_7V**

| Name | Default | Function |
|---|---|---|
| DI_7V_WB | 1.0 | 7V range, wideband input, DAC volts per input volt |
| IA_7V_WB | 100.0 | 7V range A/D volts per input volt |

**Group WAC_7V**

| Name | Default | Function |
|---|---|---|
| F1_7V_WB | 1.0 | 7V range, wideband input, flatness correction 1 (10 Hz) |
| F2_7V_WB | 1.0 | 7V range, wideband input, flatness correction 2 (50 Hz) |
| F3_7V_WB | 1.0 | 7V range, wideband input, flatness correction 3 (400 Hz) |
| F4_7V_WB | 1.0 | 7V range, wideband input, flatness correction 4 (1 kHz) |
| F5_7V_WB | 1.0 | 7V range, wideband input, flatness correction 5 (4 kHz) |
| F6_7V_WB | 1.0 | 7V range, wideband input, flatness correction 6 (30 kHz) |
| F7_7V_WB | 1.0 | 7V range, wideband input, flatness correction 7 (100 kHz) |
| F8_7V_WB | 1.0 | 7V range, wideband input, flatness correction 8 (300 kHz) |
| F9_7V_WB | 1.0 | 7V range, wideband input, flatness correction 9 (1 MHz) |
| F10_7V_WB | 1.0 | 7V range, wideband input, flatness correction 10 (4 MHz) |
| F11_7V_WB | 1.0 | 7V range, wideband input, flatness correction 11 (10 MHz) |
| F12_7V_WB | 1.0 | 7V range, wideband input, flatness correction 12 (20 MHz) |
| F13_7V_WB | 1.0 | 7V range, wideband input, flatness correction 13 (30 MHz) |
| F14_7V_WB | 1.0 | 7V range, wideband input, flatness correction 14 (40 MHz) |
| F15_7V_WB | 1.0 | 7V range, wideband input, flatness correction 15 (50 MHz) |

Cal Power
Via Acquanera, 29 22100 COMO
tel. 031.526.566 (r.a.) fax 031.507.984
info@calpower.it www.calpower.it