Multi-Wavelength Pyrometers

Williamson
Where Wavelength Matters

Some materials can be difficult or near impossible to measure with precision using single-wavelength or ratio pyrometers because of their complex emissivity characteristics. These types of materials are called non-greybody materials and their emissivity varies with wavelength.

Typical Non-Greybody Materials

- Aluminum
- Magnesium
- Stainless Steel
- Brass
- Bronze
- Copper
- Zinc

How Multi-Wavelength Pyrometers Work

- Multi-wavelength pyrometers use application specific algorithms to characterize infrared energy and emissivity across the measured wavelengths to accurately calculate both the actual temperature and emissivity of these complex non-greybody materials
- Algorithms have been developed and refined from extensive data collected from off-line simulations and on-line trials
- Each multi-wavelength sensor can hold up to eight selectable algorithms, so that the same pyrometer can be used for multiple applications

Popular Multi-Wavelength Applications

- **Aluminum & Copper:** Extruded Surface, Rolled Surface, Cast Surface, Sheared Surface, Forged Surface, Brazing Operations, Coating Preheat, Dies & Molds
- **Steel & Zinc:** Cold Rolled Steel, High Alloy Steels, Electical Steel, Zinc-Coated Steel, Shot-Blasted Pipe, High Strength Bearings, Motor Rotors
- **Other:** Glass Molds and Plungers, Magnesium Strip, All Other Non-Greybody Materials Listed Above

Cal Power

Via Acquanera, 29 22100 COMO
tel. 031.526.566 (r.a.) fax 031.507.984
info@calpower.it www.calpower.it

Specifications

Multi-Wavelength Technologies

Multi-Wavelength Specifications	
Temperature Limits	200 to 4500°F / 95 to 2475°C (actual ranges vary by model)
Spectral Response	Range of precisely selected narrow wavelength bands
Optical Resolution	Range of optics selectable by model
Accuracy	0.25% of reading or 2°C whichever is greater
Repeatability	Better than 1°C
E-Slope	0.000 to 2.000
Response and Update Time	50ms (initial response) with 25ms update time
Analog Output	0/4-20mA output (max impedance 1000 ohms)
Alarms	One field-selectable N.O. or N.C. Relay rated 1A@24V
Analog Input	4-20mA/0-20mA input (impedance 250 ohms)
Digital Communications	Bi-Directional RS485 and RS232 Multidrop communications available
Human Interface	Built-in menu system with Averaging, Peak/Valley Hold (Time or Temp Reset), Programmable Outputs & Alarms & ESP Filters
Measured Parameters	Filtered and Unfiltered Temperature, Ambient Temperature, Signal Strength/Emissivity, Signal Dilution & Rate of Change
Input Power	24Vdc (300mA)
Ambient Temperature Limits	0 to 150°F / -17 to 65°C with Water Cooling Plate: 350°F/175°C (varies with water rate & temp) with Protective Cooling Jacket: 600˚F / 315˚C Fiber Optic Cable & Lens Barrel: 400°F / 200°C
Enclosure Rating	Corrosion resistant enclosure w/ NEMA4X (IP65) rating. Optional IECEX and ATEX enclosures are available
Weight	3.6lbs (1.6kg)
Dimensions	3.5in x 3.5in x 8.25in / 89mm x 89mm x 210mm
Certification	Calibration certificate is standard with each unit CE: EMI / RFI for heavy industry; LVD (Low Voltage Directive)
Warranty	2 years

Sample Field of View

Multi-wavelength pyrometers may be used at any distance as long as the measured target fills the sensor's viewing area (i.e. a full FOV).* The diameter (d) of the viewing area is calculated as d=D/F where D is the focal distance of the sensor from the target and F is the optical resolution factor of the sensor.

**Aluminum extruded profiles and rolled bar algorithms can tolerate partial FOV.*

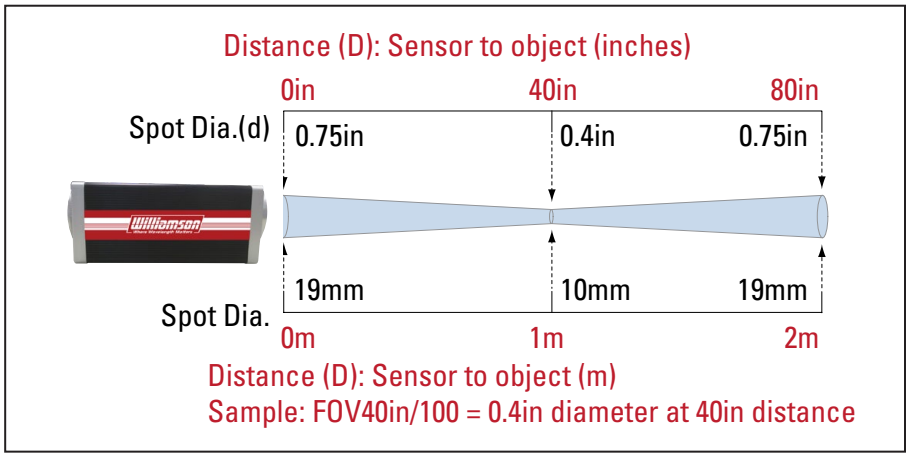

Popular MW Pyrometer Applications

Applications	MW Wavelength Code		
	10	20	25
Aluminum Extrusion and Forging		✓	
Aluminum Rolling Mill		✓	
Aluminum and Copper Billets		✓	
Copper Rod, Bar and Strip	✓	✓	
Steel Hot Dip Line		✓	
Steel Annealing Line	✓	✓	
High Strength Steel Bearings			✓
Steel Tubes	✓	✓	
Shot-Blasted Steel Tubes		✓	
Glass Mold Plunger	✓		

Pro Series Dimensions

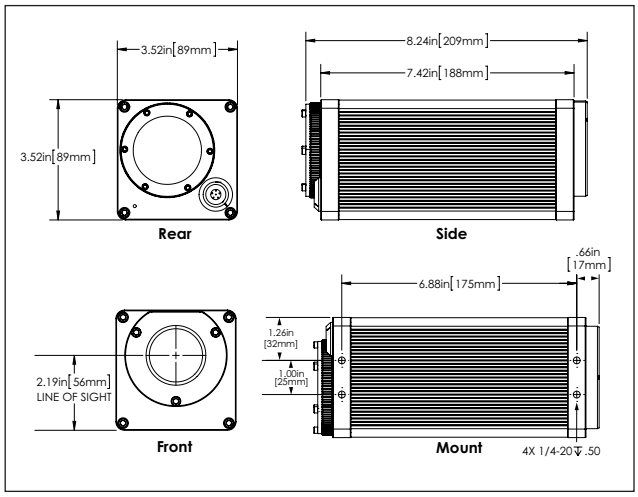

Local and Remote User Interface

Local Interface

- Increase Value
- Decrease Value
- Menu
- Enter
- Aiming On/Off
- Through Lens Aiming *(local interface only)*

Remote Interface

Sample Part Numbers

A – Model	B – Wavelength	C – Temp Code	Temp Scale	D – Field of View	E – Sensor Output	F – Options	G – Accessories	H – Cable
MW-	20-	20-	F- or C-	FOV3ft/17-	A- or D-	LA-	IM-SB-WC-AP-ESPA2-	CF040
MWF-	20-	20-	F- or C-	FOV6in/15-	A- or D-	QO6-AL-	IM-FOSB-ESPA2-	CF040

Model	Wavelength	Temp Code	Temperature Range Fahrenheit	Temperature Range Celsius	Traditional Style Optical Res.	Fiber Optic Optical Res.	Type of Fiber Cable	Max Fiber Cable Length
MW MWF	10	10	700-2100˚F	375-1150°C	D/17, D/25, D/50, D/75	D/2, D/15, D/35, D/60	Quartz	10ft / 3m
		15	750-2500°F	400-1375°C	D/17, D/25, D/50, D/75	D/2, D/15, D/35, D/60	Quartz	10ft / 3m
		20	900-3200°F	475-1750°C	D/25, D/50, D/75, D/90	D/35, D/50	Quartz	25ft/ 7.6m
		30	1000-4000°F	550-2200°C	D/25, D/50, D/75, D/90, D/110	D/35, D/50	Quartz	30ft / 9.1m
		35	1100-4500°F	600-2475°C	D/25, D/50, D/75, D/90, D/110	n/a	n/a	n/a
	20	05	300-900°F	150-475°C	D/17, D/25	D/2, D/8	Quartz	3ft / 91cm
		20	400-1100°F	200-600°C	D/17, D/25, D/50	D/2, D/15	Quartz	10ft / 3m
		34	500-1700°F	260-925°C	D/17, D/25, D/50, D/75	D/2, D/15, D/35	Quartz	10ft / 3m
		36	600-1900°F	315-1035°C	D/17, D/25, D/50, D/75, D/100	D/2, D/15, D/35, D/60	Quartz	15ft / 4.6m
		40	900-2700°F	475-1475°C	D/17, D/25, D/50, D/75, D/100	D/35, D/60	Quartz	15ft / 4.6m
	25*	03	200-700°F	95-375°C	D/17	n/a	n/a	n/a

*Wavelength 25 not available as a fiber optic configuration
Note: Not all temperature ranges shown. Consult Williamson for longer fiber cable lengths

E – Sensor Output *(Select One)*

Part No.	Description
A	Set to Analog Output/Input with linear mA output
D	Set to Digital Communications for operation w/ Interface Module or for 4-wire digital operation

F – Options *(Must Be Specified at Time of Order)*

Part No.	Description
Traditional Style	
LA	Laser Aiming
VALA	Visual Aiming and Laser Aiming
Fiber Optic Style	
AL	Built in Aim Light
FLB	Flanged Lens Barrel
LBMB	Lens Barrel Mounting Thread, Brass
4QT	Non-conductive Ceramic Quartz Tip, 4in/102mm long, threads onto end of fiber cable

ProView PC software

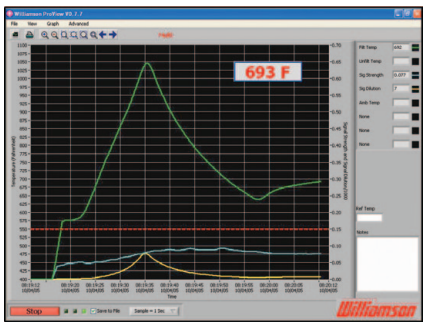

ProView PC software is compatible with Williamson Pro Series sensors. It may be used to log and analyze data and to make remote sensor adjustments.

Traditional Style Mounting and Protective Accessories

Popular Williamson accessories include: Swivel Bracket (SB), Water Cooling Plate (WC), Air Purge (AP), Protective Cooling Jacket (PCJ) and a selection of Flange Mounts (FMxx)

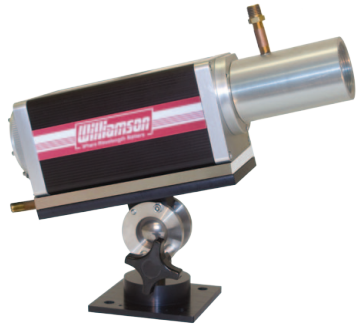

Swivel Bracket, Water Cooling Plate and Air Purge

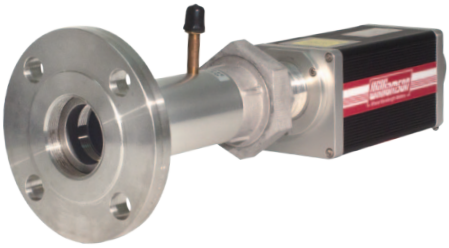

Flange Mount (includes AP)

Protective Cooling Jacket

Fiber Optic Mounting and Protective Accessories

To simplify the installation and alignment of the pyrometers, Williamson offers a Fiber Optic Swivel Bracket (FOSB), Sight Tube Swivel Bracket (STSB), and a selection of Flange Mounts (FOFMxx/STFMxx).

Fiber Cable Mounting Brackets

Fiber Optic Flange Mount (indludes AP)

Fiber Optic Cable Options

Standard Fiber Optic Cable (Gn and Qn)

Cable with Stainless Steel Braid (SSB)

Cable with Heavy Duty ArmorGuard (AG)

Monofilament Cable (Mn)

Standard fiber optic cables are sealed with a Teflon jacket over a stainless steel sheath and are available in lengths of 3-30 feet (1-9 meters). For added protection, the flexible, lightweight Stainless Steel Braid or heavy duty ArmorGuard is available. These options include an air purge and stainless steel sight tube with a 1 inch pipe thread. For applications with very confined access or a high potential for electromagnetic interference, the monofilament fiber cables with a Teflon sheathing and Teflon outer jacket offer a smaller diameter of 0.05in/1.3mm and non-conductive packaging.

G – Accessories	
Part No.	**Description**
Traditional Style	
AP	Air Purge
SB	Swivel Bracket
FMxx	Flange Mounts*
PCJ	Protective Cooling Jacket
Fiber Optic Style	
FOSB	Fiber Optic Swivel Bracket
FOMAQ	Non-conductive Fiber Optic Mounting Assembly, Quartz Window
STSB	Sight Tube Swivel Bracket (for use with SSB & AG)
FOFMxx	Fiber Optic Flange Mounts*
STFMxx	Sight Tube Flange Mounts (for use with SSB and AG)*
Pro Series – All Models	
IM	Interface Module, 1/4DIN, Outputs, Inputs, Relay Alarms Power to Sensor, Input Power (90-260Vac)
VCS	Vortex Cooling System includes Filter & Regulator
ABF	Adjustable Bellows Flange 2" ANSI both ends
WC	Water Cooling Plate

**See accessories brochure for complete listing*

Cal Power
Via Acquanera, 29 22100 COMO
tel. 031.526.566 (r.a.) fax 031.507.984
info@calpower.it www.calpower.it

WILLIAMSON CORPORATION
70 Domino Drive, Concord, Massachusetts 01742
TEL: (978) 369-9607 • FAX: (978) 369-5485 • (800) 300-8367 (USA)
sales@williamsonir.com • www.williamsonir.com

Williamson
Where Wavelength Matters