Via Acquanera, 29 22100 COMO
tel. 031.526.566 (r.a.) fax 031.507.984
info@calpower.it www.calpower.it

568 EX

Infrared Thermometer

Users Manual

PN 4326622
June 2013

LIMITED WARRANTY AND LIMITATION OF LIABILITY

This Fluke product will be free from defects in material and workmanship for two years from the date of purchase. This warranty does not cover fuses, disposable batteries, or damage from accident, neglect, misuse, alteration, contamination, or abnormal conditions of operation or handling. Resellers are not authorized to extend any other warranty on Fluke's behalf. To obtain service during the warranty period, contact your nearest Fluke authorized service center to obtain return authorization information, then send the product to that Service Center with a description of the problem.

THIS WARRANTY IS YOUR ONLY REMEDY. NO OTHER WARRANTIES, SUCH AS FITNESS FOR A PARTICULAR PURPOSE, ARE EXPRESSED OR IMPLIED. FLUKE IS NOT LIABLE FOR ANY SPECIAL, INDIRECT, INCIDENTAL OR CONSEQUENTIAL DAMAGES OR LOSSES, ARISING FROM ANY CAUSE OR THEORY. Since some states or countries do not allow the exclusion or limitation of an implied warranty or of incidental or consequential damages, this limitation of liability may not apply to you.

Fluke Corporation
P.O. Box 9090
Everett, WA 98206-9090
U.S.A.

Fluke Europe B.V.
P.O. Box 1186
5602 BD Eindhoven
The Netherlands

11/99

Table of Contents

Introduction

The 568 EX Infrared Thermometer (the Product) is designed for operation in potentially explosive areas of Zones 2 and 1 in accordance with Directive 1999/92/EC respectively 94/9/EC (ATEX).

Contact Fluke

To contact Fluke, call one of the following telephone numbers:

- Technical Support USA: 1-800-44-FLUKE (1-800-443-5853)
- Calibration/Repair USA: 1-888-99-FLUKE (1-888-993-5853)
- Canada: 1-800-36-FLUKE (1-800-363-5853)
- Europe: +31 402-675-200
- Japan: +81-3-3434-0181
- Singapore: +65-738-5655
- Anywhere in the world: +1-425-446-5500

Or, visit Fluke's website at www.fluke.com.

To register your product, visit http://register.fluke.com.

To see, print, or download the latest manual supplement, visit http://us.fluke.com/usen/support/manuals.

Safety Information

The current operating instructions, EC Declaration of Conformity and the Ex-certificate are available for download from the relevant product page under http://www.fluke.com; alternatively they can be requested directly from the manufacturer.

A **Warning** identifies conditions and procedures that are dangerous to the user.

Symbols used on the Product and in this manual are explained in Table 1. Laser safety markings are shown in Figure 1.

Note

For special safety information for use in ex-hazardous areas, please see the additional Safety Instructions.

⚠⚠⚠Warning

To prevent possible electrical shock, fire, eye damage, or personal injury:

- **Read all safety information before you use the Product.**
- **Use the Product only as specified, or the protection supplied by the Product can be compromised.**
- **Do not use the product if it operates incorrectly.**
- **See emissivity information for actual temperatures. Reflective objects result in lower than actual temperature measurements. These objects pose a burn hazard.**

- **Do not look directly into the laser with optical tools (for example, binoculars, telescopes, microscopes). Optical tools can focus the laser and be dangerous to the eye.**
- **Do not look into the laser. Do not point laser directly at persons or animals or indirectly off reflective surfaces.**
- **Use the Product only as specified or hazardous laser radiation exposure can occur.**

Table 1. Symbols

Symbol	Explanation
⚠	Hazardous voltage. Risk of electrical shock.
⚠	Risk of danger. Important information. See manual.
⚠	Warning. Laser.
CE	Conforms to European Union directives.
°C	Celsius
°F	Fahrenheit
	Battery
	This product complies with the WEEE Directive (2002/96/EC) marking requirements. The affixed label indicates that you must not discard this electrical/electronic product in domestic household waste. Product Category: With reference to the equipment types in the WEEE Directive Annex I, this product is classed as category 9 "Monitoring and Control Instrumentation" product. Do not dispose of this product as unsorted municipal waste. Go to Fluke's website for recycling information.
	Battery

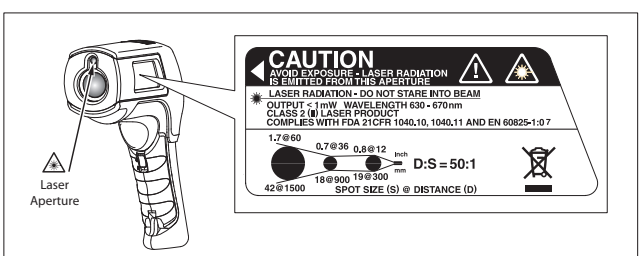

eyl08b.eps

Figure 1. Laser Safety Markings

Features

- Single-spot laser sighting
- Backlight display
- MAX, MIN, DIF, and AVG temperature display
- 80PK-1 K-type thermocouple (KTC) probe
- Adjustable emissivity and predefined emissivity table
- Infrared and thermocouple temperature display
- Celsius or Fahrenheit temperature display
- Tripod mount
- Standard miniature KTC connector input
- 12 or 24 hour clock
- Last reading Hold (20 seconds) and auto off
- Multi-language interface
- High and low temperature alarm
- Data storage and review
- Trigger lock

Display

The Product display can show data in these languages:

- English
- German
- French
- Portuguese
- Simplified Chinese

Menu Overview

Figure 2 shows the LCD and menu interface. Table 2 is a top-level description of the menu.

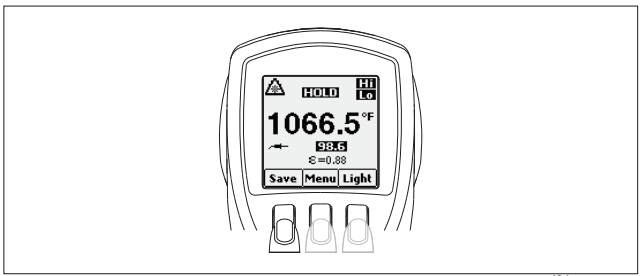

eyl01a.eps

Figure 2. Menu Navigation

Table 2. Top-Level Menu Description

Level	Softkey		Description
1	Left	**Save**	Save reading to memory
2	Left	**Mem**	Review/delete memory entries
3	Left	**MnMx**	Enable Min/Max
4	Left	**°C/°F**	Toggle between C and F
5	Left	**🔒 (Lock)**	Lock the Product on
6	Left	**Setup**	Turn off/on backlight
1	Right	**Light**	Adjust backlight brightness
2	Right	**ε**	Set emissivity
3	Right	**Avg**	Enable Avg/Diff
4	Right	**Alarm**	Set and enable alarms
5	Right	**Laser**	Toggle the laser on/off
All	Center	**Menu**	Advance the menu to the next level

Save

To save readings:

1. Pull the trigger to take a measurement and release it to stop.
2. Push the **Save** softkey to enter the Save menu.
3. Push the **Yes** softkey to save the reading.

The saved reading includes:

- IR temperature
- Thermocouple temperature (if connected)
- Emissivity
- Min/Max/Avg/Dif (if Min/Max or Avg/Dif is enabled)
- Date/Time

You can push the **Cancel** softkey to stop saving the reading.

Light

The Product has a backlight display with two brightness levels.

To toggle the backlight brightness, push the **Light** softkey.

To disable the backlight, use the Setup menu.

Memory

The Product can store up to 99 measurement records.

To access records stored in memory, push the **Menu** softkey until **Mem** shows as the left softkey, and then push the **Mem** softkey to access the Memory menu.

Emissivity Menu

The Emissivity menu includes a list of pre-defined materials and lists their typical emissivity values. See Table 3 for further information.

Note

Default emissivity is 0.95.

Table 3. Nominal Surface Emissivity

Material	Value	Material	Value
Default****	0.95	Glass	0.85
Aluminum*	0.30	Iron*	0.70
Asbestos	0.95	Lead*	0.50
Asphalt	0.95	Oil	0.94
Brass*	0.50	Paint	0.93
Ceramic	0.95	Plastic**	0.95
Concrete	0.95	Rubber	0.95
Copper*	0.60	Sand	0.90
Food - Frozen	0.90	Steel*	0.80
Food - Hot	0.93	Water	0.93
		Wood	0.94

* Oxidized
** Opaque, over 20 mils
*** Natural
**** Factory Setting
Highlighted items may also be found in the emissivity table built into the Product.

To access the Emissivity menu:

1. Push the **Menu** softkey until **E** shows as the right softkey
2. Push the **E** softkey.

To access the Emissivity list:

1. Push the **Table** softkey. The display shows a list of materials and their suggested emissivity.
2. Use the down arrow to navigate through the list.

3. Push the **Enter** softkey to choose the necessary material.

To manually type the typical emissivity of a material:

1. Push the **No.** softkey.
2. Use the down or up arrow softkey to change the entry. Hold down the arrow softkeys to increase the rate of change.
3. Push the **Done** softkey to return to the main menu.

°C and °F

To toggle between °C and °F measurements, push the **Menu** softkey until **°C** or **°F** shows as the left softkey, and then push the necessary softkey.

Min, Max, Avg, Differential

The Product can measure minimum (MIN), maximum (MAX), average (AVG), or differential (Δ) temperatures. The Product does not show these values if a thermocouple is connected to it.

To turn on the Min/Max and Avg/Diff modes:

1. Push the **Menu** softkey until **MnMx** shows as the left softkey and **Avg** shows as the right softkey.
2. Push the **MnMx** softkey and the **Avg** softkey.

Alarm

The Product has a programmable high and low temperature alarm to assign high or low readings. When the alarm level is reached, an alarm sounds and the display flashes orange and white.

To set the high or low alarm:

1. Push the **Menu** softkey until **Alarm** shows as the right softkey.
2. Push the **Alarm** softkey to access the Alarm menu.
3. Push the **Hi** or **Lo** softkey as necessary.
4. Push the **ON** or **OFF** softkey to turn the alarm on or off.
5. Use the **Set** softkey to access the Hi or Lo Alarm Set menu.
6. Use the down or up softkeys to change the alarm setting.
7. After the settings are completed, push the **Done** softkey.

Trigger Lock

The Product trigger can be locked on for continuous measurement.

To lock the trigger:

1. Push the **Menu** softkey until the lock symbol (🔒) shows as the left softkey.
2. Push the 🔒 softkey to lock the trigger. The lock symbol shows on the display. When the trigger is locked, the 🔒 softkey changes to 🔓. Push this softkey to unlock the trigger.

Laser

The Product has a laser for aiming purposes only. The laser turns off when the trigger is released.

To enable or disable the laser:

1. Push the **Menu** softkey until **Laser** shows as the right softkey.
2. Push the **Laser** softkey to enable or disable the laser.

   ⚠ shows on the display when the laser is enabled.

Setup

From the Setup menu, the display language, backlight, and time/date can be changed.

Language

To change the display language:

1. From the main menu, push the **Menu** softkey until **Setup** shows as the left softkey.
2. Push the **Setup** softkey.
3. Use the down arrow softkey to move the indicator to **Language**, and push the **Enter** softkey.
4. Use the down arrow to move the indicator to the correct language.
5. Push the **Enter** softkey to complete the language selection, or push the **Back** softkey to return to the Setup menu.

Backlight

The backlight is on by default. Turn the backlight off to conserve battery power.

1. Push the **Menu** softkey until **Setup** shows as the left softkey.
2. Push the **Setup** softkey.
3. Push the **Enter** softkey to enter the backlight menu.
4. Push the **OFF** softkey to turn the backlight off, or push the **ON** softkey to turn it on.
5. Push the **Back** softkey to return to the Setup Menu.

Time/Date

To change the time on the Product:

1. Push the **Menu** softkey until **Setup** shows as the left softkey.
2. Push the **Setup** softkey to enter the Setup menu.
3. Push the down arrow softkey to select **Time/Date**.
4. Push the **Enter** softkey.
5. Push the **Time** softkey to set time.
    a. Push the necessary time format (**24hr** or **12hr**).
    b. Use the up and down softkeys to select the correct hour.
    c. Push **Next** to select the minutes.
    d. Use the up and down softkeys to select the minute.
    e. When in 12 hour mode, push the **Next** softkey to highlight the **am/pm** parameter.
    f. Use the up and down softkey to change to **am** or **pm**.
6. Push the **Done** softkey.

To change the date on the Product:

1. From the Time/Date menu, push the **Date** softkey.
2. Select the date format: Day/Month/Year (**dmy**) or Month/Day/Year (**mdy**).
3. Use the up and down softkeys to select the correct parameter.
4. Push the **Next** softkey and the arrow softkeys to select the month, date, or year parameters.
5. Use the up and down softkeys to set the necessary parameter.
6. Push the **Next** softkey to move through each parameter.
7. Push the **Done** softkey.

Delete Data

To delete stored data from the Product, from the main menu, push the **Menu** softkey until **Mem** shows as the left softkey function. The last memory location shows on the display.

To access the Delete menu, push the **Delete** softkey.

- To delete all records, push the **All** softkey. At the confirmation screen, push the **Yes** softkey.
- To delete individual records, push the **View** softkey and then use the down and up arrow softkeys to access the necessary record. When the correct record is shown, push the **Yes** softkey to delete the record.
- To cancel data deletion, pull the trigger.

How the Product Works

The Product measures the surface temperature of an object. The Product optics sense emitted, reflected, and transmitted energy, which is collected and focused onto a detector. The Product electronics translate the signal into a temperature measurement which the Product shows on the display (see Figure 3).

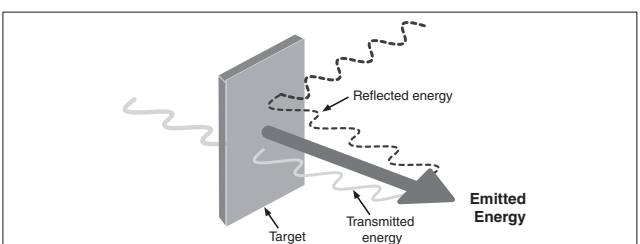

efh002f.eps

Figure 3. How the Product Works

Product Operation

Temperature Measurement

To measure temperature, point the Product at an object and pull the trigger. You can use the laser pointer to help aiming. You can also insert the KTC probe for contact measurement. Be sure to consider distance-to-spot size ratio and field of view (see “Distance and Spot Size” and “Field of View”).

Note

The laser is used for aiming purposes only and is not related to temperature measurement.

The Product automatically powers down after 20 seconds of inactivity. To turn the Product on, pull the trigger.

Find a Hot or Cold Spot

To find a hot or cold spot, aim the Product outside the necessary area. Then, slowly scan across the area with an up and down motion until the hot or cold spot is found (see Figure 4).

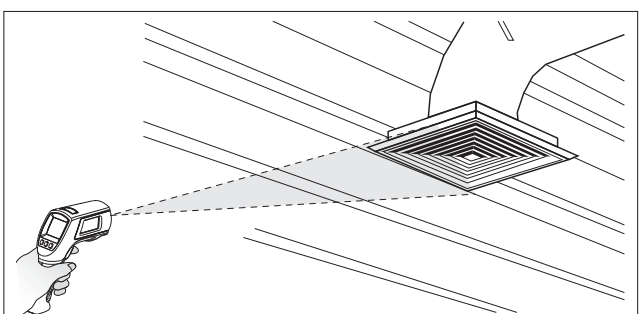

eyl07.eps

Figure 4. Find a Hot or Cold Spot

Distance and Spot Size

As the distance (D) from the object under measurement increases, the spot size (S) of the area measured by the Product becomes larger. The relationship between distance and spot size (D:S) is shown in Figure 5. The spot sizes indicate 90 % encircled energy.

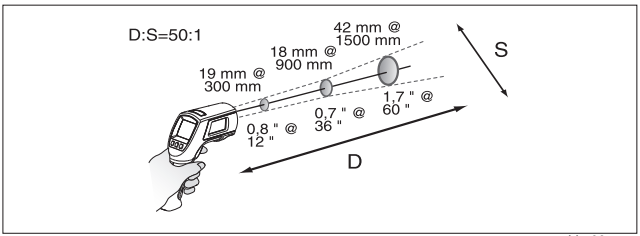

hhe06a.eps

Figure 5. Distance and Spot Size

Field of View

When making measurements, make sure that the target is larger than the Product spot size. The smaller the target, the closer you should be to it (see Figure 6). For accurate measurement, it is strongly recommended that the target size is at least twice as large as the spot size.

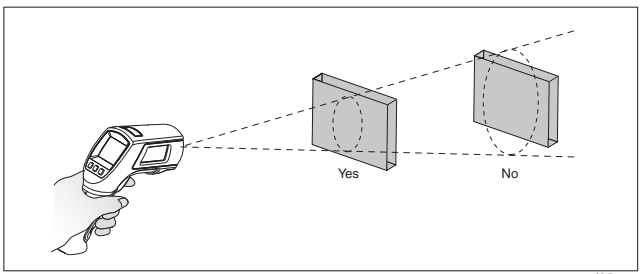

eyl05.eps

Figure 6. Field of View

HOLD

After the trigger is released, the display retains its last infrared measurement for 20 seconds. At the same time, **HOLD** shows on the display. With the probe inserted, the contact Product stays on. To freeze the infrared temperature when a probe is not inserted, release the trigger until **HOLD** shows on the display.

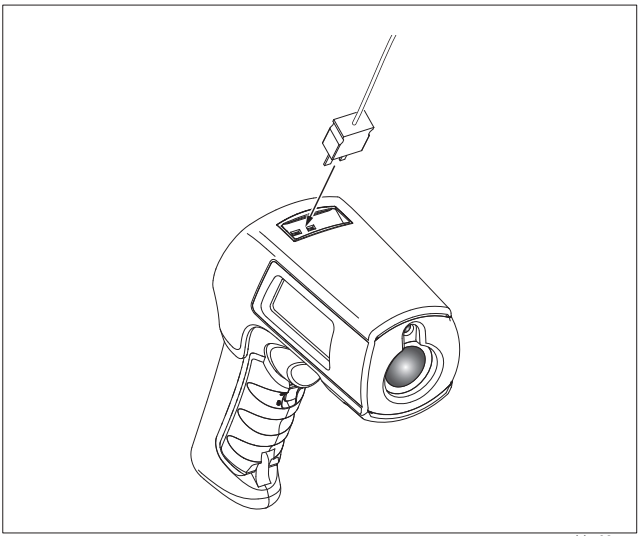

hhe03.eps

Figure 7. Thermocouple Connection

External Contact Probe

The Product has a bead KTC probe. The probe attaches to the Product via the probe input located on the top of the Product (see Figure 7).

With the probe installed, the probe symbol ( ) shows on the display. The probe can be used simultaneously when the Product is making non-contact measurements. The probe measurements are shown below the non-contact measurements. The Product stays on when a probe is inserted.

Troubleshooting

See Table 4 for solutions to possible problems during Product operation.

Table 4. Troubleshooting

Symptom	Cause	Action
--- (on display)	Target temperature is over or under range.	Select target within specifications
	Low batteries	Replace batteries*
Blank display	Product is asleep Possible dead batteries	Pull trigger Replace batteries*
Laser does not work	Low or dead batteries Ambient temperature is above 40 °C (104 °F)	Replace batteries* Use in area with lower ambient temperature
Inaccuracy	Possible incorrect emissivity setting, field of view, or spot size	See “Emissivity”, “Field of View” and “Distance and Spot Size” sections.
Settings such as emissivity, date/time, F/C, and saved data lost	Battery dead or not replaced in <1 minute of removal	Reset settings. Replace batteries as soon as low battery indicated; Exchange the batteries within one minute of removal. *

*For details about battery replacement, please refer to the separate *Safety Instructions*.

Maintenance

For detailed maintenance information, please refer to the separate *Safety Instructions*.

Battery Replacement

For detailed information, please refer to the separate *Safety Instructions*.

Clean the Lens

Use clean compressed air to blow off loose particles. Carefully clean the surface with a water-moistened cotton swab.

Clean the Case

Use mild soap and water on a moist sponge or soft cloth.

Replacement Parts

See Table 5 for a list of replacement parts.

Table 5. Replacement Parts

Description	Qty.	Fluke Part Number
568 EX HOLSTER RED	1	4251170
568 EX LEATHER GRIP	1	4282316
568 EX HARDCASE RED	1	4334265
FLUKE 568 EX MANUAL	1	4326622
Battery AAA 1.5 V	2	2838018

Accessories

Optional accessories for the Product are 80PK-1 K-type thermocouple probes (PN: 750422).

Specifications

General Specifications

IR Temperature Range	-40 °C to 800 °C (-40 °F to 1472 °F)
Accuracy	<0 °C: ±(1.0 °C + 0.1 °/1 °C) ≥0 °C: ±1 % or ± 1.0 °C, whichever is greater <32 °F: ±2 °F ±0.1 °/1 °F ≥32 °F: ±1 % or ±2 °F, whichever is greater
Repeatability	±0.5 % of reading or ±0.5 °C (1 °F), whichever is greater.
Display Resolution	0.1 °C / 0.1 °F
Spectral Response	8 µm to 14 µm
Response Time	<500 ms (95 %)
KTC Input Range	-270 °C to 1372 °C (-454 °F to 2501 °F)
KTC Input Accuracy	<-40 °C: ±(1 °C + 0.2 °/1 °C) ≥-40 °C: ±1 % or 1 °C, whichever is greater <-40 °F: ±(2 °F + 0.2 °/1 °F) ≥-40 °F: ±1 % or 2 °F, whichever is greater
KTC Resolution	0.1 °C/0.1 °F
Distance: Spot	50:1 (90 % energy)
Laser sighting	Single laser, output <1 mW Class II, wavelength 630 to 670 nm
Emissivity	Digitally adjustable from 0.10 to 1.00 by 0.01 or via built-in table of common materials
Data storage	99 points
Operating Altitude	2000 meters above mean sea level
Storage Altitude	12,000 meters above mean sea level
Relative Humidity	10 % to 90 % RH non-condensing up to 30 °C (86 °F)
Operating Temperature	0 °C to 50 °C (32 °F to 122 °F)

Storage Temperature	-20 °C to 60 °C (-4 °F to 149 °F)
Vibration	2.5 G, IEC 68-2-6
Weight	0.322 kg (0.7099 lb)
Dimensions	17.69 cm (6.965 in) H x 16.36 cm (6.441 in) L x 5.18 cm (2.039 in) W
Power	3 AAA /LR03 type-approved batteries. (For a list of type-approved batteries, please refer to the separate *Safety Instructions*.)
Battery Life	4 hours with laser and backlight on; 100 hours with laser and backlight off, at 100 % duty cycle (Product continuously on)

KTC Specifications

Note

Only approved accessories can be used with the Product. For details, please refer to the separate Safety Instructions.

Measurement Range	-40 °C to 260 °C (-40 °F to 500 °F)
Accuracy	±1.1 °C (±2.0 °F) from 0 °C to 260 °C (32 °F to 500 °F). Typically within 1.1 °C (2.0 °F) from -40 °C to 0 °C (-40 °F to 32 °F)
Cable Length	1 m (40 in) KTC cable with standard miniature thermocouple connector and bead termination

Via Acquanera, 29 22100 COMO
tel. 031.526.566 (r.a.) fax 031.507.984
info@calpower.it www.calpower.it